EANCOM® 2002 S4

COACSU

Commercial account summary message

Edition 2016 Upd. 2021

1. Introduction 2
2. Message Structure Chart 3
3. Branching Diagram 4
4. Segments Description 9
5. Segments Layout 13
6. Example(s) 57

1. Introduction

Status

MESSAGE TYPE	: COACSU
REFERENCE DIRECTORY	: D.01B
EANCOM® SUBSET VERSION	: 004

Definition

A Commercial Account Summary message enables the transmission of commercial data concerning payments made and outstanding items on an account over a period of time. The message may be exchanged by trading partners or may be sent by parties to their authorised agents (e.g., accountants).

Principles

A Commercial Account Summary may;

- refer to Invoices, Credit Notes, Debit Notes, or payments over a period of time.
- refer to only one commercial account, in one payment currency.
- be initiated at any time by a party, depending upon agreement between the parties involved.
- provide information on a commercial account over a period of time. When the message is used in this way both payments made and amounts outstanding may be detailed.
- be used to provide aged analysis details on payments made and, or, amounts outstanding over periods defined by the parties.
- be used as a reminder of payment due for the current accounting period.
- be used as a demand for payment and detail penalties for amounts outstanding from previous accounting periods.
- be used to help in the reconciliation of commercial accounts when detailing payments made.
- be used to summarise other forms of commercial data such as pro-forma invoices.

The Commercial Account Summary can also be used as a response to a previous Commercial Account Summary. In that way it may be:

- An acknowledgement of receipt and understanding of data;
- A confirmation of acceptance;
- A notification of non-acceptance of all or part of the message;
- A COACSU response may refer to one or more outstanding items (e.g. Invoices);
- A COACSU may be responded to by one response message.

2. Message Structure Chart

UNA		1	C	1	- Service string advice
UNB		2	M	1	- Interchange header
Commercial Account Summary Heading Section					
UNH		3	M	1	- Message header
BGM		4	M	1	- Beginning of message
DTM		5	M	9	- Date/time/period
FTX		6	C	99	- Free text
SG1	+		C	9	- RFF
RFF	+	7	M	1	- Reference
SG2			C	99	- NAD-FII-SG3-SG4
NAD		8	M	1	- Name and address
FII		9	C	9	- Financial institution information
SG3			C	9	- RFF
RFF		10	M	1	- Reference
SG4			C	9	- CTA-COM
CTA		11	M	1	- Contact information
COM		12	C	9	- Communication contact
SG5			C	9	- CUX
CUX		13	M	1	- Currencies
SG6			C	9	- PYT-MOA-PCD-DTM-FII-PAI
PYT		14	M	1	- Payment terms
MOA		15	C	9	- Monetary amount
PCD		16	C	9	- Percentage details
DTM		17	C	9	- Date/time/period
FII		18	C	1	- Financial institution information
PAI		19	C	9	- Payment instructions
Commercial Account Summary Detail Section					
SG7			C	99999	- DOC-DTM-SG8-SG10
DOC		20	M	1	- Document/message details
DTM		21	C	9	- Date/time/period
SG8			C	9	- NAD-SG9
NAD		22	M	1	- Name and address
SG9			C	99	- RFF-DTM
RFF		23	M	1	- Reference
DTM		24	C	9	- Date/time/period
SG10			C	99	- MOA-TAX-SG11
MOA		25	M	1	- Monetary amount
TAX		26	C	9	- Duty/tax/fee details
SG11			C	9	- AJT-MOA-RFF
AJT		27	M	1	- Adjustment details
MOA		28	M	1	- Monetary amount
RFF		29	C	1	- Reference
Commercial Account Summary Summary Section					
UNS		30	M	1	- Section control
SG12			C	99	- MOA-TAX-DTM
MOA		31	M	1	- Monetary amount
TAX		32	C	9	- Duty/tax/fee details
DTM		33	C	9	- Date/time/period
CNT	+	34	C	1	- Control total
UNT		35	M	1	- Message trailer
UNZ		36	M	1	- Interchange trailer

3. Branching Diagram

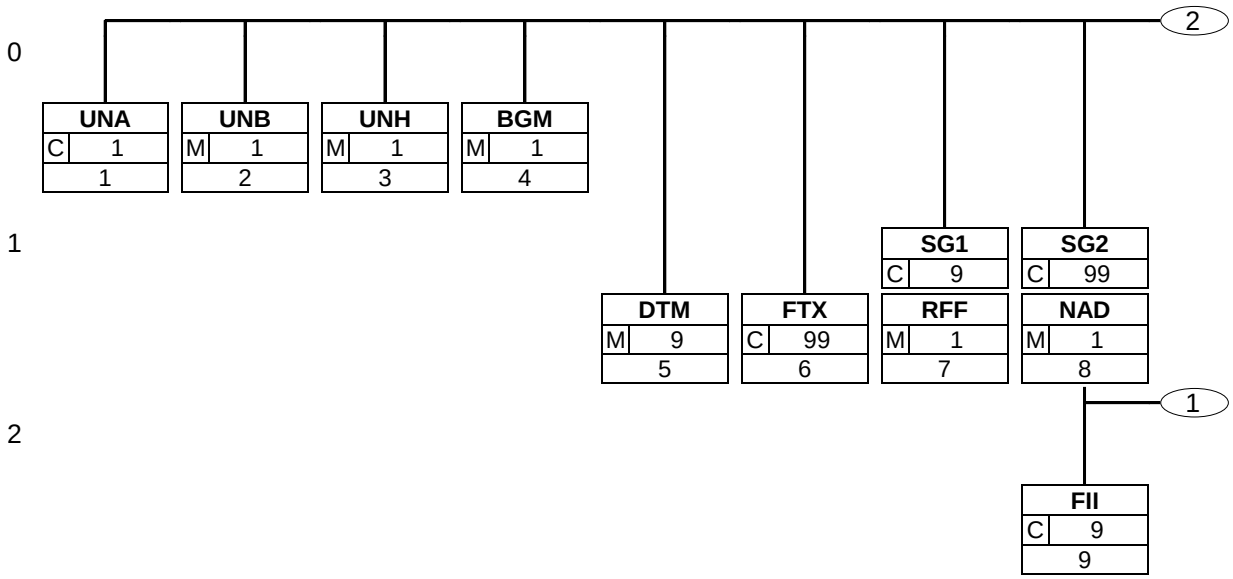

3. Branching Diagram

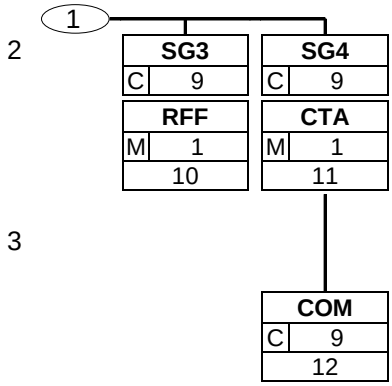

3. Branching Diagram

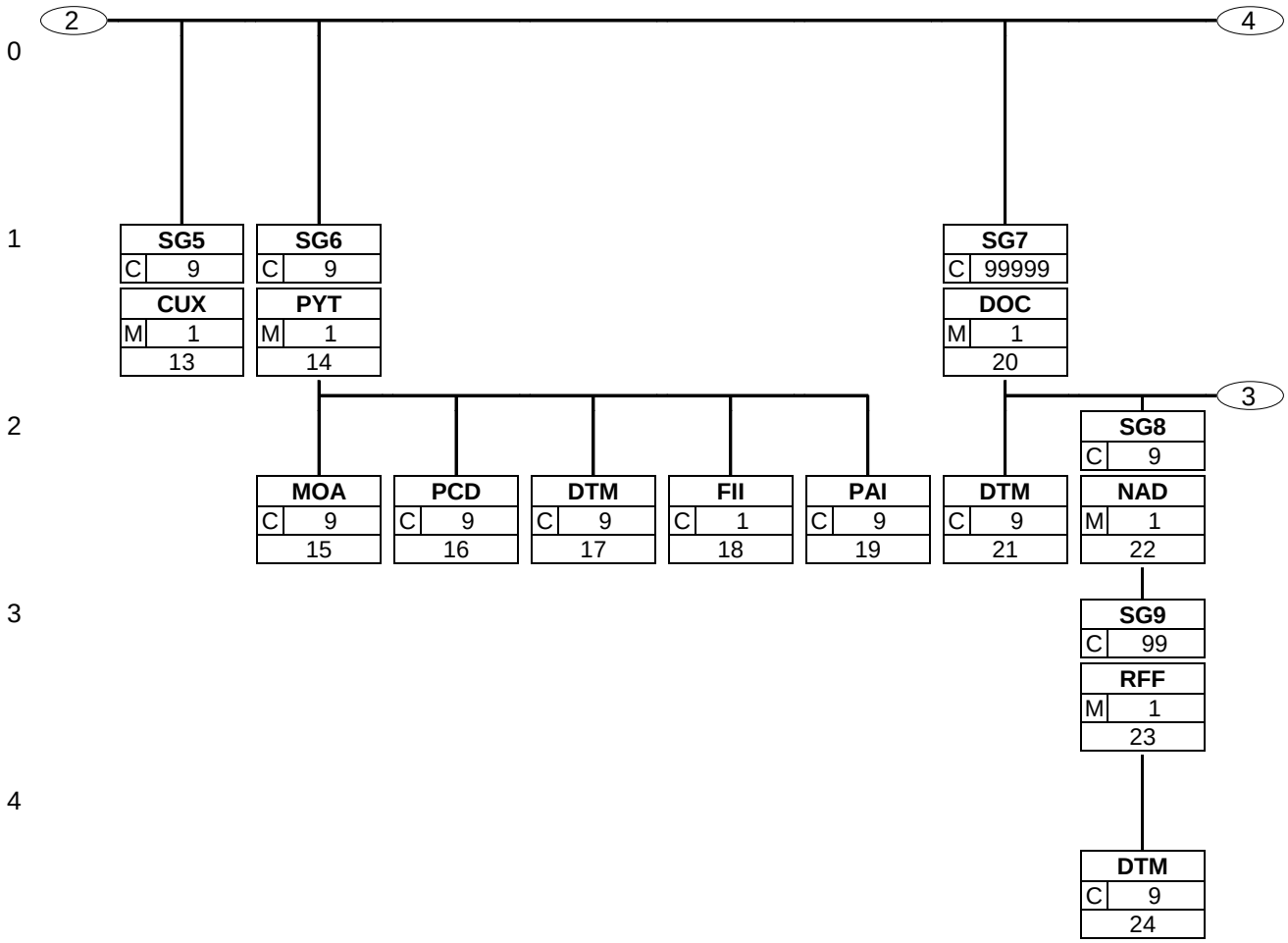

3. Branching Diagram

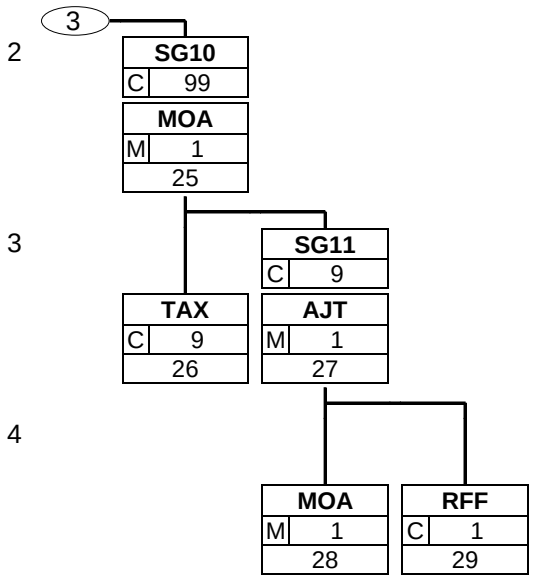

3. Branching Diagram

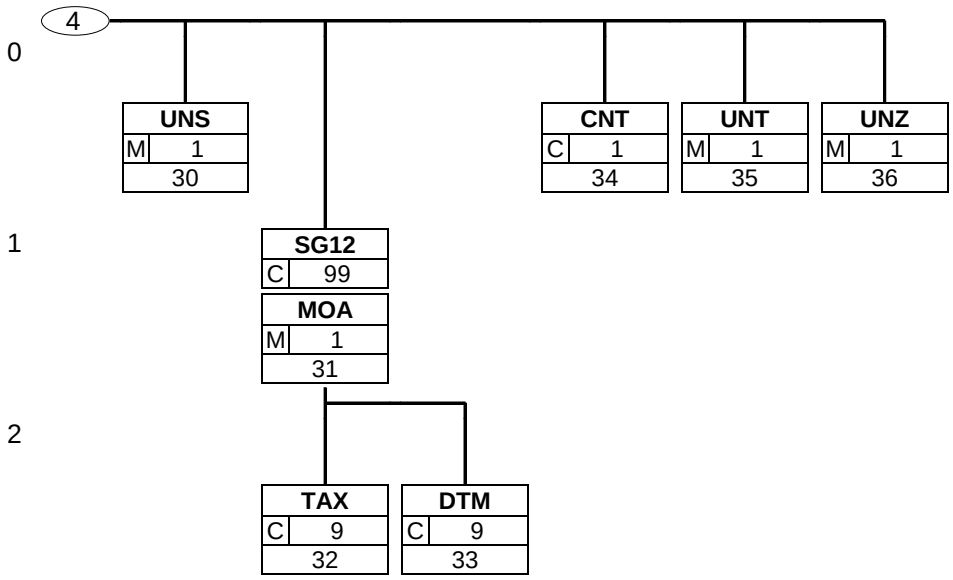

4. Segments Description

UNA - C 1 - Service string advice

This segment is used to inform the receiver of the interchange that a set of service string characters which are different to the default characters are being used.

UNB - M 1 - Interchange header

This segment is used to envelope the interchange, as well as to identify both, the party to whom the interchange is sent and the party who has sent the interchange. The principle of the UNB segment is the same as a physical envelope which covers one or more letters or documents, and which details, both the address where delivery is to take place and the address from where the envelope has come.

Commercial Account Summary Heading Section

UNH - M 1 - Message header

This segment is used to head, identify and specify a message.

BGM - M 1 - Beginning of message

This segment is used to indicate the type and function of a message and to transmit the identifying number.

DTM - M 9 - Date/time/period

This segment is used to specify any dates related to the commercial account summary.

FTX - C 99 - Free text

This segment is used to provide additional free text information related to the entire message.

SG1 - C 9 - **RFF**

A group of segments to provide references related to the heading section.

RFF - M 1 - Reference

This segment is used to provide references related to the heading section.

SG2 - C 99 - **NAD-FII-SG3-SG4**

A group of segments identifying the parties involved in the transaction, financial information for the parties, and the contact points and numbers.

NAD - M 1 - Name and address

This segment is used to identify the trading parties involved in the commercial account summary process. Identification of the buyer and supplier of goods and services is recommended in the commercial account summary.

FII - C 9 - Financial institution information

This segment is used to identify the financial institution and account details of the party identified in the previous NAD segment.

SG3 - C 9 - **RFF**

A group of segments for specifying any references relating to the identified party.

RFF - M 1 - Reference

This segment is used to specify reference numbers related to the parties identified in the previous NAD segment.

SG4 - C 9 - **CTA-COM**

A group of segments identifying the contact person or department for a trading party and specifying the communication channel and number.

CTA - M 1 - Contact information

This segment is used to identify the department and/or person within the party specified in the NAD.

4. Segments Description

COM - C 9	- Communication contact	
	This segment is used to identify the communications number and the type of communications used for the person and/or department identified in the CTA segment.	
SG5 - C 9	- **CUX**	
	A group of segments specifying the currencies and related dates/periods valid for the whole commercial account summary.	
CUX - M 1	- Currencies	
	This segment is used to specify the currency applicable to all monetary amounts detailed in the message.	
SG6 - C 9	- **PYT-MOA-PCD-DTM-FII-PAI**	
	A group of segments specifying the payment and penalty terms for the commercial account summary message.	
PYT - M 1	- Payment terms	
	This segment is used by the issuer of the commercial account summary to specify payment terms applicable to the complete message.	
MOA - C 9	- Monetary amount	
	This segment is used to specify monetary values which will be allowed or charged if the party receiving the message pays (does not pay) to terms.	
PCD - C 9	- Percentage details	
	This segment is used to specify percentages which will be allowed or charged if the party receiving the message pays (does not pay) to terms.	
DTM - C 9	- Date/time/period	
	This segment is used to specify any dates associated with the payment terms.	
FII - C 1	- Financial institution information	
	This segment is used to specify any financial institution information which is specific to the payment terms previously detailed.	
PAI - C 9	- Payment instructions	
	This segment is used to specify any payment instructions which are specific to the current payment terms.	

Commercial Account Summary Detail Section

SG7 - C 99999	- **DOC-DTM-SG8-SG10**	
	A group of segments identifying documents and their numbers, e.g. invoices or credit notes to which the commercial account summary refers. The group may contain details of the monetary values associated with the documents and any relevant dates. There must be at least one occurrence of this group within the commercial account summary message.	
DOC - M 1	- Document/message details	
	This segment is used to identify the document for which summary information is being provided.	
DTM - C 9	- Date/time/period	
	This segment is used to specify dates or periods relating to the documents given in the previous DOC segment.	
SG8 - C 9	- **NAD-SG9**	
	A group of segments to identify parties and any associated references related to the current document.	
NAD - M 1	- Name and address	
	This segment is used to identify the parties associated with the document identified in the DOC segment.	

4. Segments Description

SG9 - C 99 - **RFF-DTM**

A group of segments for specifying any references relating to the party.

RFF - M 1 - Reference

This segment is used to specify reference numbers related to the parties identified in the previous NAD segment.

DTM - C 9 - Date/time/period

This segment is used to specify dates or periods relating to the references given in the previous RFF segment.

SG10 - C 99 - **MOA-TAX-SG11**

A group of segments providing total monetary values, tax information, and adjustment details for the currently referenced document.

MOA - M 1 - Monetary amount

This segment is used to indicate values associated with the currently identified document, e.g. amount remitted, invoice total amount, etc.

TAX - C 9 - Duty/tax/fee details

This segment is used to specify the type and rate of tax or duty applicable to the amount specified in the previous MOA segment.

SG11 - C 9 - **AJT-MOA-RFF**

A group of segments providing adjustment details related to the monetary value for the currently referenced document.

AJT - M 1 - Adjustment details

This segment is used to indicate the reason for an adjustment to the document monetary amount.

MOA - M 1 - Monetary amount

This segment is used to indicate the value of an adjustment made to the amount specified in the MOA segment in group 10.

RFF - C 1 - Reference

This segment is used to specify any references related to the previously specified adjustment details.

Commercial Account Summary Summary Section

UNS - M 1 - Section control

This segment is used to identify the break between the message detail and message trailer sections.

SG12 - C 99 - **MOA-TAX-DTM**

A group of segments specifying the total amounts, tax information, and any pertinent dates for the complete commercial account summary

MOA - M 1 - Monetary amount

This segment is used to indicate total values for the complete message and/or the breakdown of tax values for each rate of tax detailed in the following TAX segment.

TAX - C 9 - Duty/tax/fee details

This segment is used to specify the type and rate of tax or duty applicable to the amount specified in the previous MOA segment.

DTM - C 9 - Date/time/period

This segment is used to specify any dates associated with the monetary amounts specified in the previous MOA segment.

CNT - C 1 - Control total

This segment is used to indicate controls.

4. Segments Description

UNT - M 1 - Message trailer

This segment is a mandatory UN/EDIFACT segment. It must always be the last segment in the message.

UNZ - M 1 - Interchange trailer

This segment is used to provide the trailer of an interchange.

5. Segments Layout

This section describes each segment used in the EANCOM® Commercial Account Summary message. The original EDIFACT segment layout is listed. The appropriate comments relevant to the EANCOM® subset are indicated.

Notes:

1. The segments are presented in the sequence in which they appear in the message. The segment or segment group tag is followed by the (M)andatory / (C)onditional indicator, the maximum number of occurrences and the segment description.

2. Reading from left to right, in column one, the data element tags and descriptions are shown, followed by in the second column the EDIFACT status (M or C), the field format, and the picture of the data elements. These first pieces of information constitute the original EDIFACT segment layout.

   Following the EDIFACT information, EANCOM® specific information is provided in the third, fourth, and fifth columns. In the third column a status indicator for the use of (C)onditional EDIFACT data elements (see 2.1 through 2.3 below), in the fourth column the restricted indicator (see point 3 on the following page), and in the fifth column notes and code values used for specific data elements in the message.

2.1 (M)andatory data elements in EDIFACT segments retain their status in EANCOM®.

2.2 Additionally, there are five types of status for data elements with a (C)onditional EDIFACT status, whether for simple, component or composite data elements. These are listed below and can be identified when relevant by the following abbreviations:

- REQUIRED	**R**	Indicates that the entity is required and must be sent.
- ADVISED	**A**	Indicates that the entity is advised or recommended.
- DEPENDENT	**D**	Indicates that the entity must be sent in certain conditions, as defined by the relevant explanatory note.
- OPTIONAL	**O**	Indicates that the entity is optional and may be sent at the discretion of the user.
- NOT USED	**N**	Indicates that the entity is not used and should be omitted.

2.3 If a composite is flagged as **N, NOT USED**, all data elements within that composite will have blank status indicators assigned to them.

3. Status indicators detailed in the fourth column which directly relate to the code values detailed in the fifth **column** may have two values:

- RESTRICTED	*****	A data element marked with an asterisk (*) in the fourth column indicates that the listed codes in column five are the only codes available for use with this data element, in this segment, in this message.
- OPEN		All data elements where coded representation of data is possible and a restricted set of code values is not indicated are open (no asterisk in fourth column). The available codes are listed in the EANCOM® Data Elements and Code Sets Directory. Code values may be given as examples or there may be a note on the format or type of code to be used.

4. Different colours are used for the code values in the segment details: restricted codes are in red and open codes in blue.

5. Segments Layout

Segment number: 1

UNA	- C	1 - Service string advice			
Function: The service string advice shall begin with the upper case characters UNA immediately followed by six characters in the order shown below. The space character shall not be used in positions 010, 020, 040, 050 or 060. The same character shall not be used in more than one position of the UNA.					
		EDIFACT	GS1	*	Description
UNA1	Component data element separator	M an1	**M**	*	Used as a separator between component data elements contained within a composite data element (default value: ":")
UNA2	Data element separator	M an1	**M**	*	Used to separate two simple or composite data elements (default value: "+")
UNA3	Decimal mark	M an1	**M**	*	Used to indicate the character used for decimal notation (default value:".")
UNA4	Release character	M an1	**M**	*	Used to restore any service character to its original specification (value: "?").
UNA5	Repetition separator	M an1	**M**	*	Used to indicate the character used for repetition separation (value: " * ").
UNA6	Segment terminator	M an1	**M**	*	Used to indicate the end of segment data (default value: " ' ")

Segment Notes:

This segment is used to inform the receiver of the interchange that a set of service string characters which are different to the default characters are being used.
When using the default set of service characters, the UNA segment need not be sent. If it is sent, it must immediately precede the UNB segment and contain the four service string characters (positions UNA1, UNA2, UNA4 and UNA6) selected by the interchange sender.
Regardless of whether or not all of the service string characters are being changed every data element within this segment must be filled, (i.e., if some default values are being used with user defined ones, both the default and user defined values must be specified).
When expressing the service string characters in the UNA segment, it is not necessary to include any element separators.
The use of the UNA segment is required when using a character set other than level A.
UNA:+.?*'

5. Segments Layout

Segment number: 2

UNB	- M	1 - Interchange header

Function:

To identify an interchange.

Notes:
1. S001/0002, shall be '4' to indicate this version of the syntax.
2. The combination of the values carried in data elements S002, S003 and 0020 shall be used to identify uniquely the interchange, for the purpose of acknowledgement.

		EDIFACT	GS1	*	Description
S001	SYNTAX IDENTIFIER	M	**M**		See Part I chapter 5.2.7 and segment notes.
0001	Syntax identifier	M a4	**M**	*	UNOA = UN/ECE level A UNOB = UN/ECE level B UNOC = UN/ECE level C UNOD = UN/ECE level D UNOE = UN/ECE level E UNOF = UN/ECE level F UNOG = UN/ECE level G UNOH = UN/ECE level H UNOI = UN/ECE level I UNOJ = UN/ECE level J UNOK = UN/ECE level K UNOW = UN/ECE level W UNOX = UN/ECE level X UNOY = UN/ECE level Y
0002	Syntax version number	M an1	**M**	*	4 = Version 4
0080	Service code list directory version number	C an..6	**N**		
0133	Character encoding, coded	C an..3	**N**		
S002	INTERCHANGE SENDER	M	**M**		
0004	Interchange sender identification	M an..35	**M**		GLN (n13)
0007	Identification code qualifier	C an..4	**R**	*	14 = GS1
0008	Interchange sender internal identification	C an..35	**O**		
0042	Interchange sender internal sub-identification	C an..35	**N**		
S003	INTERCHANGE RECIPIENT	M	**M**		
0010	Interchange recipient identification	M an..35	**M**		GLN (n13)
0007	Identification code qualifier	C an..4	**R**	*	14 = GS1
0014	Interchange recipient internal identification	C an..35	**O**		
0046	Interchange recipient internal sub-identification	C an..35	**N**		
S004	DATE AND TIME OF PREPARATION	M	**M**		
0017	Date	M n8	**M**		CCYYMMDD
0019	Time	M n4	**M**		HHMM
0020	Interchange control reference	M an..14	**M**		Unique reference identifying the interchange. Created

5. Segments Layout

Segment number: 2

		EDIFACT	GS1	*	Description
					by the interchange sender.
S005	RECIPIENT REFERENCE/ PASSWORD DETAILS	C	**O**		
0022	Recipient reference/password	M an..14	**M**		
0025	Recipient reference/password qualifier	C an2	**O**		
0026	Application reference	C an..14	**O**		Message identification if the interchange contains only one type of message.
0029	Processing priority code	C a1	**O**		A = Highest priority
0031	Acknowledgement request	C n1	**O**		1 = Requested
0032	Interchange agreement identifier	C an..35	**O**	*	EANCOM.....
0035	Test indicator	C n1	**O**		1 = Interchange is a test

Segment Notes:

This segment is used to envelope the interchange, as well as to identify both, the party to whom the interchange is sent and the party who has sent the interchange. The principle of the UNB segment is the same as a physical envelope which covers one or more letters or documents, and which details, both the address where delivery is to take place and the address from where the envelope has come.
S001: The character encoding specified in basic code table of ISO/IEC 646 (7-bit coded character set for information interchange) shall be used for the interchange service string advice (if used) and up to and including the composite data element S001 'Syntax identifier' in the interchange header. The character repertoire used for the characters in an interchange shall be identified from the code value of data element 0001 in S001 'Syntax identifier' in the interchange header. The character repertoire identified does not apply to objects and/or encrypted data.
The default encoding technique for a particular repertoire shall be the encoding technique defined by its associated character set specification.
DE 0001: The recommended (default) character set for use in EANCOM® for international exchanges is character set A (UNOA). Should users wish to use character sets other than A, an agreement on which set to use should be reached on a bilateral basis before communications begin.
DE 0004, 0008, 0010 and 0014: Within EANCOM® the use of the Global Location Number (GLN) is recommended for the identification of the interchange sender and recipient.
DE 0008: Identification (e.g. a division) specified by the sender of the interchange, to be included if agreed, by the recipient in response interchanges, to facilitate internal routing.
DE 0014: The address for routing, provided beforehand by the interchange recipient, is used by the interchange sender to inform the recipient of the internal address, within the latter's systems, to which the interchange should be routed. It is recommended that the GLN be used for this purpose.
DE 0007: Identification (e.g. a division) specified by the recipient of the interchange, to be included if agreed, by the sender in response interchanges, to facilitate internal routing.
DE S004: The date and time specified in this composite should be the date and time at which the interchange sender prepared the interchange. This date and time may not necessarily be the same as the date and time of contained messages.
DE 0020: The interchange control reference number is generated by the interchange sender and is used to identify uniquely each interchange. Should the interchange sender wish to re-use interchange control reference numbers, it is recommended that each number be preserved for at least a period of three months before being re-used. In order to guarantee uniqueness, the interchange control reference number should always be linked to the interchange sender's identification (DE 0004).
DE S005: The use of passwords must first be agreed bilaterally by the parties exchanging the interchange.
DE 0026: This data element is used to identify the application, on the interchange recipient's system, to which the interchange is directed. This data element may only be used if the interchange contains only one type of message, (e.g. only invoices). The reference used in this data element is assigned by the interchange sender.
DE 0031: This data element is used to indicate whether an acknowledgement to the interchange is required. The EANCOM® APERAK or CONTRL message should be used to provide acknowledgement of interchange receipt. In addition, the EANCOM® CONTRL message may be used to indicate when an interchange has been rejected

5. Segments Layout

Segment number: 2

due to syntax errors.
DE 0032: This data element is used to identify any underlying agreements which control the exchange of data. Within EANCOM® , the identity of such agreements must start with the letters 'EANCOM', the remaining characters within the data element being filled according to bilateral agreements.

UNB+UNOC:4+5412345678908:14+8798765432106:14+20020102:1000+12345555+++++EANCOMREF 52'

5. Segments Layout

Segment number: 3

UNH	- M	1 - Message header

Function:

To head, identify and specify a message.

Notes:
1. Data element S009/0057 is retained for upward compatibility. The use of S016 and/or S017 is encouraged in preference.
2. The combination of the values carried in data elements 0062 and S009 shall be used to identify uniquely the message within its group (if used) or if not used, within its interchange, for the purpose of acknowledgement.

		EDIFACT	GS1	*	Description
0062	Message reference number	M an..14	**M**		Senders unique message reference. Sequence number of messages in the interchange. DE 0062 in UNT will have the same value. Generated by the sender.
S009	MESSAGE IDENTIFIER	M	**M**		
0065	Message type	M an..6	**M**	*	COACSU = Commercial account summary message
0052	Message version number	M an..3	**M**	*	D = Draft version/UN/EDIFACT Directory
0054	Message release number	M an..3	**M**	*	01B = Release 2001 - B
0051	Controlling agency, coded	M an..3	**M**	*	UN = UN/CEFACT
0057	Association assigned code	C an..6	**R**	*	EAN004 = GS1 version control number (GS1 Permanent Code) Indicates that the message is the EANCOM version 004 of the UNSM Commercial Account Summary.
0110	Code list directory version number	C an..6	**O**		This data element can be used to identify the codelist agreed by the interchange partners, e.g. EAN001 = EANCOM 2002 S4 codelist released on 01.12.2002 by GS1.
0113	Message type sub-function identification	C an..6	**N**		
0068	Common access reference	C an..35	**N**		
S010	STATUS OF THE TRANSFER	C	**N**		
0070	Sequence of transfers	M n..2			
0073	First and last transfer	C a1			
S016	MESSAGE SUBSET IDENTIFICATION	C	**N**		
0115	Message subset identification	M an..14			
0116	Message subset version number	C an..3			
0118	Message subset release number	C an..3			
0051	Controlling agency, coded	C an..3			
S017	MESSAGE IMPLEMENTATION GUIDELINE IDENTIFICATION	C	**N**		
0121	Message implementation guideline identification	M an..14			
0122	Message implementation guideline version number	C an..3			

5. Segments Layout

Segment number: 3

		EDIFACT	GS1	*	Description
0124	Message implementation guideline release number	C an..3			
0051	Controlling agency, coded	C an..3			
S018	SCENARIO IDENTIFICATION	C	**N**		
0127	Scenario identification	M an..14			
0128	Scenario version number	C an..3			
0130	Scenario release number	C an..3			
0051	Controlling agency, coded	C an..3			

Segment Notes:

This segment is used to head, identify and specify a message.
DE's 0065, 0052, and 0054: Indicate that the message is a UNSM Commercial Account Summary message based on the D.01B EDIFACT directory.

Example:
UNH+ME000001+COACSU:D:01B:UN:EAN004'

5. Segments Layout

Segment number: 4

BGM	- M	1 - Beginning of message			
Function: To indicate the type and function of a message and to transmit the identifying number.					
		EDIFACT	GS1	*	Description
C002	DOCUMENT/MESSAGE NAME	C	**R**		
1001	Document name code	C an..3	**R**	*	397 = Commercial account summary response 731 = Commercial account summary
1131	Code list identification code	C an..17	**N**		
3055	Code list responsible agency code	C an..3	**D**	*	9 = GS1
1000	Document name	C an..35	**O**		
C106	DOCUMENT/MESSAGE IDENTIFICATION	C	**R**		
1004	Document identifier	C an..35	**R**		Number of the COACSU document assigned by document sender. For global unique identification of documents Global Document Type Identifier (GDTI) is available.
1056	Version identifier	C an..9	**N**		
1060	Revision identifier	C an..6	**N**		
1225	Message function code	C an..3	**R**	*	9 = Original 9 = Original - An original transmission of a commercial account summary.
4343	Response type code	C an..3	**N**		

Segment Notes:

This segment is used to indicate the type and function of a message and to transmit the identifying number.

Example:
BGM+731::9+CA5422+9'
This example identifies the document as being an original commercial account summary with the reference number CA5422.

5. Segments Layout

Segment number: 5

DTM	- M	9 - Date/time/period			
Function: To specify date, and/or time, or period.					
		EDIFACT	GS1	*	Description
C507	DATE/TIME/PERIOD	M	**M**		
2005	Date or time or period function code qualifier	M an..3	**M**		137 = Document/message date/time 263 = Invoicing period 322 = Accounting period 325 = Tax period
2380	Date or time or period value	C an..35	**R**		
2379	Date or time or period format code	C an..3	**R**		102 = CCYYMMDD 718 = CCYYMMDD-CCYYMMDD

Segment Notes:

This segment is used to specify any dates related to the commercial account summary.
DE 2005: Identification of the 'Document/message date/time' (code value 137) is mandatory in an EANCOM message.

Example:
DTM+137:20020701:102'
DTM+263:2002060120020630:718'
The commercial account summary has a message date of the 1st of July 2002 and covers the invoicing period of the 1st of June 2002 to the 30th of June 2002.

5. Segments Layout

Segment number: 6

FTX	- C	99 - Free text			
Function: To provide free form or coded text information.					
		EDIFACT	GS1	*	Description
4451	Text subject code qualifier	M an..3	**M**		ABN = Accounting information ZZZ = Mutually defined
4453	Free text function code	C an..3	**O**	*	1 = Text for subsequent use
C107	TEXT REFERENCE	C	**D**		This composite is only used when trading partners have agreed to use mutually defined code values.
4441	Free text value code	M an..17	**M**		001 = Reference to standard text between trading partners.
1131	Code list identification code	C an..17	**O**		
3055	Code list responsible agency code	C an..3	**D**		91 = Assigned by supplier or supplier's agent 92 = Assigned by buyer or buyer's agent
C108	TEXT LITERAL	C	**D**		This composite is only used if coded text can not be used.
4440	Free text value	M an..512	**M**		
4440	Free text value	C an..512	**O**		
4440	Free text value	C an..512	**O**		
4440	Free text value	C an..512	**O**		
4440	Free text value	C an..512	**O**		
3453	Language name code	C an..3	**D**		ISO 639 two alpha code This data element is only used when non coded free text has been provided in data element C108.
4447	Free text format code	C an..3	**N**		

Segment Notes:

This segment is used to provide additional free text information related to the entire message.
Use of this segment in free form is not recommended since in most cases it inhibits automatic processing of the commercial account summary. Coded references to standard texts is an available functionality which enables automatic processing and reduces transmission and processing overheads. Standard texts should be mutually defined among trading partners and can be used to cover legal and other requirements.

Example:
FTX+ABN+1+001::91'
(E.g. Accounting information standard text code 001 = Please note payment and penalty terms).

5. Segments Layout

Segment number: 7

SG1	- C	9 -	RFF
RFF	- M	1 -	Reference

Function:

To specify a reference.

		EDIFACT	GS1	*	Description
C506	REFERENCE	M	**M**		
1153	Reference code qualifier	M an..3	**M**		PQ = Payment reference ABO = Originator's reference CT = Contract number AE = Authorization for expense (AFE) number AKO = Action authorization number ANJ = Authorization number APQ = Commercial account summary reference number
1154	Reference identifier	C an..70	**R**		
1156	Document line identifier	C an..6	**N**		
4000	Reference version identifier	C an..35	**N**		
1060	Revision identifier	C an..6	**N**		

Segment Notes:

This segment is used to provide references related to the heading section.

Example:
RFF+CT:TT76GZ45'

5. Segments Layout

Segment number: 8

SG2	- C	99 -	NAD-FII-SG3-SG4
NAD	- M	1 -	Name and address

Function:

To specify the name/address and their related function, either by C082 only and/or unstructured by C058 or structured by C080 thru 3207.

		EDIFACT	GS1	*	Description
3035	Party function code qualifier	M an..3	**M**		AB = Buyer's agent/representative BY = Buyer CO = Corporate office II = Issuer of invoice IV = Invoicee PE = Payee PR = Payer SR = Supplier's agent/representative SU = Supplier
C082	PARTY IDENTIFICATION DETAILS	C	**A**		
3039	Party identifier	M an..35	**M**		For identification of parties it is recommended to use GLN - Format n13.
1131	Code list identification code	C an..17	**N**		
3055	Code list responsible agency code	C an..3	**R**	*	9 = GS1
C058	NAME AND ADDRESS	C	**O**		This composite may only be used to fulfill the requirements of directive 2003/58/EC, article 4.
3124	Name and address description	M an..35	**M**		
3124	Name and address description	C an..35	**O**		
3124	Name and address description	C an..35	**O**		
3124	Name and address description	C an..35	**O**		
3124	Name and address description	C an..35	**O**		
C080	PARTY NAME	C	**D**		
3036	Party name	M an..35	**M**		Party Name in clear text.
3036	Party name	C an..35	**O**		
3036	Party name	C an..35	**O**		
3036	Party name	C an..35	**O**		
3036	Party name	C an..35	**O**		
3045	Party name format code	C an..3	**O**		
C059	STREET	C	**D**		
3042	Street and number or post office box identifier	M an..35	**M**		Building Name/Number and Street Name
3042	Street and number or post office box identifier	C an..35	**O**		
3042	Street and number or post office box identifier	C an..35	**O**		
3042	Street and number or post office box identifier	C an..35	**O**		
3164	City name	C an..35	**D**		City/Town name, clear text

5. Segments Layout

Segment number: 8

		EDIFACT	GS1	*	Description
C819	COUNTRY SUB-ENTITY DETAILS	C	**D**		
3229	Country sub-entity name code	C an..9	**O**		
1131	Code list identification code	C an..17	**O**		
3055	Code list responsible agency code	C an..3	**O**		
3228	Country sub-entity name	C an..70	**O**		County/State, clear text.
3251	Postal identification code	C an..17	**D**		Postal Code
3207	Country name code	C an..3	**D**		ISO 3166 two alpha code

Segment Notes:

This segment is used to identify the trading parties involved in the commercial account summary process. Identification of the buyer and supplier of goods and services is recommended in the commercial account summary.

Example:
NAD+BY+5412345123453::9'
NAD+SU+5411111123451::9'

Dependency Notes:
The following composites and data elements are only used when a coded name and address can not be used. The affected composites and data elements are as follows:
C080 - C059 - 3164 - C819 - 3251 - 3207

5. Segments Layout

Segment number: 9

SG2	- C	99 -	NAD-FII-SG3-SG4
FII	- C	9 -	Financial institution information

Function:

To identify an account and a related financial institution.

		EDIFACT	GS1	*	Description
3035	Party function code qualifier	M an..3	**M**		PB = Paying financial institution RB = Receiving financial institution
C078	ACCOUNT HOLDER IDENTIFICATION	C	**R**		
3194	Account holder identifier	C an..35	**R**		
3192	Account holder name	C an..35	**O**		
3192	Account holder name	C an..35	**O**		
6345	Currency identification code	C an..3	**O**		ISO 4217 three alpha code
C088	INSTITUTION IDENTIFICATION	C	**D**		In some countries it is possible to identify within the account number the institution name and branch. Where this is possible the composite C088 will not be required. For international transactions it is recommended that the need for composite C088 should be checked before sending the message. When using C088 it is recommended that if data element 3433 is not used that 3432 be used, and that when data element 3434 is not used that data element 3436 be used.
3433	Institution name code	C an..11	**A**		
1131	Code list identification code	C an..17	**C**		25 = Bank identification
3055	Code list responsible agency code	C an..3	**D**		5 = ISO (International Organization for Standardization)
3434	Institution branch identifier	C an..17	**O**		
1131	Code list identification code	C an..17	**O**		
3055	Code list responsible agency code	C an..3	**D**		
3432	Institution name	C an..70	**O**		
3436	Institution branch location name	C an..70	**O**		
3207	Country name code	C an..3	**O**		ISO 3166 two alpha code

Segment Notes:

This segment is used to identify the financial institution and account details of the party identified in the previous NAD segment.

Example:
FII+PB+24680123+KREDBEBB:25:5'
The bank receiving the commercial account summary message is identified using the bank identification code KREDBEBB (which is maintained by ISO).

5. Segments Layout

Segment number: 10

SG2	- C	99 -	NAD-FII-SG3-SG4
SG3	- C	9 -	RFF
RFF	- M	1 -	Reference

Function:

To specify a reference.

		EDIFACT	GS1	*	Description
C506	REFERENCE	M	**M**		
1153	Reference code qualifier	M an..3	**M**	*	AWX = Company trading account number GN = Government reference number VA = VAT registration number XA = Company/place registration number YC1 = Additional party identification (GS1 Temporary Code)
1154	Reference identifier	C an..70	**R**		
1156	Document line identifier	C an..6	**N**		
4000	Reference version identifier	C an..35	**N**		
1060	Revision identifier	C an..6	**N**		

Segment Notes:

This segment is used to specify reference numbers related to the parties identified in the previous NAD segment.

Example:
RFF+VA:VR12345'

5. Segments Layout

Segment number: 11

SG2	- C	99 -	NAD-FII-SG3-SG4
SG4	- C	9 -	CTA-COM
CTA	- M	1 -	Contact information

Function:

To identify a person or a department to whom communication should be directed.

		EDIFACT	GS1	*	Description
3139	Contact function code	C an..3	**R**		AD = Accounting contact AP = Accounts payable contact AR = Accounts receivable contact
C056	DEPARTMENT OR EMPLOYEE DETAILS	C	**O**		
3413	Department or employee name code	C an..17	**O**		
3412	Department or employee name	C an..35	**O**		

Segment Notes:

This segment is used to identify the department and/or person within the party specified in the NAD.
Global Location Number GLN - Format n13 - is particularly suitable for this purpose.

Example:
CTA+AD+:MARK CARTER'

5. Segments Layout

Segment number: 12

SG2	- C	99 -	NAD-FII-SG3-SG4
SG4	- C	9 -	CTA-COM
COM	- C	9 -	Communication contact

Function:

To identify a communication number of a department or a person to whom communication should be directed.

		EDIFACT	GS1	*	Description
C076	COMMUNICATION CONTACT	M	**M**		
3148	Communication address identifier	M an..512	**M**		
3155	Communication address code qualifier	M an..3	**M**		AO = Uniform Resource Location (URL) EI = EDI EM = Electronic mail TE = Telephone

Segment Notes:

This segment is used to identify the communications number and the type of communications used for the person and/or department identified in the CTA segment.

Example:
COM+00448132445322:TE'

5. Segments Layout

Segment number: 13

SG5	- C	9 -	CUX
CUX	- M	1 -	Currencies

Function:

To specify currencies used in the transaction and relevant details for the rate of exchange.

		EDIFACT	GS1	*	Description
C504	CURRENCY DETAILS	C	**R**		
6347	Currency usage code qualifier	M an..3	**M**	*	2 = Reference currency
6345	Currency identification code	C an..3	**R**		ISO 4217 three alpha
6343	Currency type code qualifier	C an..3	**R**		4 = Invoicing currency 11 = Payment currency
6348	Currency rate value	C n..4	**N**		
C504	CURRENCY DETAILS	C	**N**		
6347	Currency usage code qualifier	M an..3			
6345	Currency identification code	C an..3			
6343	Currency type code qualifier	C an..3			
6348	Currency rate value	C n..4			
5402	Currency exchange rate	C n..12	**N**		
6341	Exchange rate currency market identifier	C an..3	**N**		

Segment Notes:

This segment is used to specify the currency applicable to all monetary amounts detailed in the message.
As the message is a single currency message the second occurrence of C504 and data element 5402 should not be used.

Example:
CUX+2:EUR:11'

5. Segments Layout

Segment number: 14

SG6	- C	9 -	PYT-MOA-PCD-DTM-FII-PAI
PYT	- M	1 -	Payment terms

Function:

To specify the terms of payment.

		EDIFACT	GS1	*	Description
4279	Payment terms type code qualifier	M an..3	**M**		1 = Basic 3 = Fixed date 7 = Extended 20 = Penalty terms 21 = Payment by instalment 22 = Discount
C019	PAYMENT TERMS	C	**N**		
4277	Payment terms description identifier	C an..17			
1131	Code list identification code	C an..17			
3055	Code list responsible agency code	C an..3			
4276	Payment terms description	C an..35			
2475	Time reference code	C an..3	**O**		7 = Date of present document
2009	Terms time relation code	C an..3	**O**		3 = After reference
2151	Period type code	C an..3	**O**		D = Day M = Month WD = Working days Y = Year
2152	Period count quantity	C n..3	**O**		Number of periods for payment.

Segment Notes:

This segment is used by the issuer of the commercial account summary to specify payment terms applicable to the complete message.

Example:
The following example indicates basic payment terms with payment due 30 days after the reference date which is the date of the present commercial account summary.
PYT+1++7+3+D+30'

5. Segments Layout

Segment number: 15

SG6	- C	9 -	PYT-MOA-PCD-DTM-FII-PAI
MOA	- C	9 -	Monetary amount

Function:

To specify a monetary amount.

		EDIFACT	GS1	*	Description
C516	MONETARY AMOUNT	M	**M**		
5025	Monetary amount type code qualifier	M an..3	**M**		21 = Cash discount 23 = Charge amount 28E = Financing allowance/charge (GS1 Temporary Code)
5004	Monetary amount	C n..35	**R**		Actual value being charged/discounted.
6345	Currency identification code	C an..3	**N**		
6343	Currency type code qualifier	C an..3	**N**		
4405	Status description code	C an..3	**N**		

Segment Notes:

This segment is used to specify monetary values which will be allowed or charged if the party receiving the message pays (does not pay) to terms.

Example:
MOA+21:100'

5. Segments Layout

Segment number: 16

SG6	- C	9 -	PYT-MOA-PCD-DTM-FII-PAI
PCD	- C	9 -	Percentage details

Function:

To specify percentage information.

		EDIFACT	GS1	*	Description
C501	PERCENTAGE DETAILS	M	**M**		
5245	Percentage type code qualifier	M an..3	**M**		7 = Percentage of invoice 12 = Discount 15 = Penalty percentage 16 = Interest percentage
5482	Percentage	C n..10	**R**		
5249	Percentage basis identification code	C an..3	**O**		13 = Invoice value
1131	Code list identification code	C an..17	**O**		
3055	Code list responsible agency code	C an..3	**D**		
4405	Status description code	C an..3	**N**		

Segment Notes:

This segment is used to specify percentages which will be allowed or charged if the party receiving the message pays (does not pay) to terms.

Example:
PCD+15:2.5:13'

5. Segments Layout

Segment number: 17

SG6	- C	9 -	PYT-MOA-PCD-DTM-FII-PAI
DTM	- C	9 -	Date/time/period

Function:

To specify date, and/or time, or period.

		EDIFACT	GS1	*	Description
C507	DATE/TIME/PERIOD	M	**M**		
2005	Date or time or period function code qualifier	M an..3	**M**	*	12 = Terms discount due date/time 13 = Terms net due date 209 = Value date
2380	Date or time or period value	C an..35	**R**		
2379	Date or time or period format code	C an..3	**R**		102 = CCYYMMDD 203 = CCYYMMDDHHMM

Segment Notes:

This segment is used to specify any dates associated with the payment terms.

Example:
DTM+13:20020831:102'
Net due date for payment is the 31st August 2002.

5. Segments Layout

Segment number: 18

SG6	- C	9 -	PYT-MOA-PCD-DTM-FII-PAI
FII	- C	1 -	Financial institution information

Function:

To identify an account and a related financial institution.

		EDIFACT	GS1	*	Description
3035	Party function code qualifier	M an..3	**M**		OR = Ordered bank
C078	ACCOUNT HOLDER IDENTIFICATION	C	**R**		
3194	Account holder identifier	C an..35	**R**		
3192	Account holder name	C an..35	**O**		
3192	Account holder name	C an..35	**O**		
6345	Currency identification code	C an..3	**O**		ISO 4217 three alpha code
C088	INSTITUTION IDENTIFICATION	C	**R**		When using C088 it is recommended that if data element 3433 is not used that 3432 be used, and that when data element 3434 is not used that data element 3436 be used.
3433	Institution name code	C an..11	**R**		
1131	Code list identification code	C an..17	**O**		25 = Bank identification
3055	Code list responsible agency code	C an..3	**D**		5 = ISO (International Organization for Standardization)
3434	Institution branch identifier	C an..17	**O**		
1131	Code list identification code	C an..17	**O**		
3055	Code list responsible agency code	C an..3	**D**		
3432	Institution name	C an..70	**O**		
3436	Institution branch location name	C an..70	**O**		
3207	Country name code	C an..3	**O**		ISO 3166 two alpha code

Segment Notes:

This segment is used to specify any financial institution information which is specific to the payment terms previously detailed.

Example:
FII+MR++KREDBEBB:25:5'
The bank receiving the commercial account summary message is identified using the bank identification code KREDBEBB (which is maintained by ISO).

5. Segments Layout

Segment number: 19

SG6	- C	9 -	PYT-MOA-PCD-DTM-FII-PAI
PAI	- C	9 -	Payment instructions

Function:

To specify the instructions for payment.

		EDIFACT	GS1	*	Description
C534	PAYMENT INSTRUCTION DETAILS	M	**M**		
4439	Payment conditions code	C an..3	**O**		
4431	Payment guarantee means code	C an..3	**O**		
4461	Payment means code	C an..3	**O**		42 = Payment to bank account
1131	Code list identification code	C an..17	**O**		
3055	Code list responsible agency code	C an..3	**D**		
4435	Payment channel code	C an..3	**O**		

Segment Notes:

This segment is used to specify any payment instructions which are specific to the current payment terms.

Example:
PAI+::42'

5. Segments Layout

Segment number: 20

SG7	- C	99999	-	DOC-DTM-SG8-SG10
DOC	- M	1	-	Document/message details

Function:

To identify documents and details directly related to it.

		EDIFACT	GS1	*	Description
C002	DOCUMENT/MESSAGE NAME	M	**M**		
1001	Document name code	C an..3	**R**		82 = Metered services invoice 83 = Credit note related to financial adjustments 84 = Debit note related to financial adjustments 380 = Commercial invoice 381 = Credit note - goods and services 383 = Debit note - goods and services 385 = Consolidated invoice 386 = Prepayment invoice 389 = Self-billed invoice 390 = Delcredere invoice 393 = Factored invoice 481 = Remittance advice
1131	Code list identification code	C an..17	**O**		
3055	Code list responsible agency code	C an..3	**D**		
1000	Document name	C an..35	**N**		
C503	DOCUMENT/MESSAGE DETAILS	C	**R**		
1004	Document identifier	C an..35	**R**		
1373	Document status code	C an..3	**N**		
1366	Document source description	C an..70	**N**		
3453	Language name code	C an..3	**N**		
1056	Version identifier	C an..9	**N**		
1060	Revision identifier	C an..6	**N**		
3153	Communication medium type code	C an..3	**N**		
1220	Document copies required quantity	C n..2	**N**		
1218	Document originals required quantity	C n..2	**N**		

Segment Notes:

This segment is used to identify the document for which summary information is being provided.

Example:
DOC+380+253-94'

5. Segments Layout

Segment number: 21

SG7	- C	99999	-	DOC-DTM-SG8-SG10
DTM	- C	9	-	Date/time/period

Function:

To specify date, and/or time, or period.

		EDIFACT	GS1	*	Description
C507	DATE/TIME/PERIOD	M	**M**		
2005	Date or time or period function code qualifier	M an..3	**M**	*	137 = Document/message date/time 140 = Payment due date
2380	Date or time or period value	C an..35	**R**		
2379	Date or time or period format code	C an..3	**R**		102 = CCYYMMDD 718 = CCYYMMDD-CCYYMMDD

Segment Notes:

This segment is used to specify dates or periods relating to the documents given in the previous DOC segment.

Example:
DTM+137:20020511:102'

5. Segments Layout

Segment number: 22

SG7	- C	99999	-	DOC-DTM-SG8-SG10
SG8	- C	9	-	NAD-SG9
NAD	- M	1	-	Name and address

Function:

To specify the name/address and their related function, either by C082 only and/or unstructured by C058 or structured by C080 thru 3207.

		EDIFACT	GS1	*	Description
3035	Party function code qualifier	M an..3	**M**		AB = Buyer's agent/representative BY = Buyer CO = Corporate office DP = Delivery party II = Issuer of invoice IV = Invoicee PE = Payee PR = Payer SR = Supplier's agent/representative SU = Supplier
C082	PARTY IDENTIFICATION DETAILS	C	**A**		
3039	Party identifier	M an..35	**M**		For identification of parties it is recommended to use GLN - Format n13.
1131	Code list identification code	C an..17	**N**		
3055	Code list responsible agency code	C an..3	**R**	*	9 = GS1
C058	NAME AND ADDRESS	C	**O**		This composite may only be used to fulfill the requirements of directive 2003/58/EC, article 4.
3124	Name and address description	M an..35	**M**		
3124	Name and address description	C an..35	**O**		
3124	Name and address description	C an..35	**O**		
3124	Name and address description	C an..35	**O**		
3124	Name and address description	C an..35	**O**		
C080	PARTY NAME	C	**D**		
3036	Party name	M an..35	**M**		Party Name in clear text.
3036	Party name	C an..35	**O**		
3036	Party name	C an..35	**O**		
3036	Party name	C an..35	**O**		
3036	Party name	C an..35	**O**		
3045	Party name format code	C an..3	**O**		
C059	STREET	C	**D**		
3042	Street and number or post office box identifier	M an..35	**M**		Building Name/Number and Street Name
3042	Street and number or post office box identifier	C an..35	**O**		
3042	Street and number or post office box identifier	C an..35	**O**		
3042	Street and number or post office box identifier	C an..35	**O**		

5. Segments Layout

Segment number: 22

		EDIFACT	GS1	*	Description
3164	City name	C an..35	**D**		City/Town name, clear text
C819	COUNTRY SUB-ENTITY DETAILS	C	**D**		
3229	Country sub-entity name code	C an..9	**O**		
1131	Code list identification code	C an..17	**O**		
3055	Code list responsible agency code	C an..3	**O**		
3228	Country sub-entity name	C an..70	**O**		County/State, clear text.
3251	Postal identification code	C an..17	**D**		Postal Code
3207	Country name code	C an..3	**D**		ISO 3166 two alpha code

Segment Notes:

This segment is used to identify the parties associated with the document identified in the DOC segment.

Example:
NAD+DP+5412345111115::9'

Dependency Notes:
The following composites and data elements are only used when a coded name and address can not be used.
The affected composites and data elements are as follows:
C080 - C059 - 3164 - C819 - 3251 - 3207

5. Segments Layout

Segment number: 23

SG7	- C	99999	-	DOC-DTM-SG8-SG10
SG8	- C	9	-	NAD-SG9
SG9	- C	99	-	RFF-DTM
RFF	- M	1	-	Reference

Function:

To specify a reference.

		EDIFACT	GS1	*	Description
C506	REFERENCE	M	**M**		
1153	Reference code qualifier	M an..3	**M**		AAK = Despatch advice number BO = Blanket order number DQ = Delivery note number ON = Order number (buyer) PL = Price list number RA = Remittance advice number VN = Order number (supplier)
1154	Reference identifier	C an..70	**R**		
1156	Document line identifier	C an..6	**O**		
4000	Reference version identifier	C an..35	**N**		
1060	Revision identifier	C an..6	**N**		

Segment Notes:

This segment is used to specify reference numbers related to the parties identified in the previous NAD segment.

Example:
RFF+ON:VR12345'

5. Segments Layout

Segment number: 24

SG7	- C	99999	-	DOC-DTM-SG8-SG10
SG8	- C	9	-	NAD-SG9
SG9	- C	99	-	RFF-DTM
DTM	- C	9	-	Date/time/period

Function:

To specify date, and/or time, or period.

		EDIFACT	GS1	*	Description
C507	DATE/TIME/PERIOD	M	**M**		
2005	Date or time or period function code qualifier	M an..3	**M**	*	171 = Reference date/time
2380	Date or time or period value	C an..35	**R**		
2379	Date or time or period format code	C an..3	**R**		102 = CCYYMMDD 718 = CCYYMMDD-CCYYMMDD

Segment Notes:

This segment is used to specify dates or periods relating to the references given in the previous RFF segment.

Example:
DTM+171:20020501:102'

5. Segments Layout

Segment number: 25

SG7	- C	99999	-	DOC-DTM-SG8-SG10
SG10	- C	99	-	MOA-TAX-SG11
MOA	- M	1	-	Monetary amount

Function:

To specify a monetary amount.

		EDIFACT	GS1	*	Description
C516	MONETARY AMOUNT	M	**M**		
5025	Monetary amount type code qualifier	M an..3	**M**		9 = Amount due/amount payable 12 = Amount remitted 39 = Invoice total amount 124 = Tax amount 125 = Taxable amount 201 = Penalty amount
5004	Monetary amount	C n..35	**R**		
6345	Currency identification code	C an..3	**N**		
6343	Currency type code qualifier	C an..3	**N**		
4405	Status description code	C an..3	**N**		

Segment Notes:

This segment is used to indicate values associated with the currently identified document, e.g. amount remitted, invoice total amount, etc.

Example:
MOA+9:5300'

5. Segments Layout

Segment number: 26

SG7	- C	99999 -	DOC-DTM-SG8-SG10
SG10	- C	99 -	MOA-TAX-SG11
TAX	- C	9 -	Duty/tax/fee details

Function:

To specify relevant duty/tax/fee information.

		EDIFACT	GS1	*	Description
5283	Duty or tax or fee function code qualifier	M an..3	**M**		5 = Customs duty 7 = Tax
C241	DUTY/TAX/FEE TYPE	C	**D**		
5153	Duty or tax or fee type name code	C an..3	**O**		GST = Goods and services tax VAT = Value added tax
1131	Code list identification code	C an..17	**O**		
3055	Code list responsible agency code	C an..3	**D**		
5152	Duty or tax or fee type name	C an..35	**O**		
C533	DUTY/TAX/FEE ACCOUNT DETAIL	C	**O**		
5289	Duty or tax or fee account code	M an..6	**M**		
1131	Code list identification code	C an..17	**O**		
3055	Code list responsible agency code	C an..3	**D**		
5286	Duty or tax or fee assessment basis value	C an..15	**O**		
C243	DUTY/TAX/FEE DETAIL	C	**A**		
5279	Duty or tax or fee rate code	C an..7	**O**		
1131	Code list identification code	C an..17	**O**		
3055	Code list responsible agency code	C an..3	**D**		
5278	Duty or tax or fee rate	C an..17	**R**		The actual rate of tax/duty.
5273	Duty or tax or fee rate basis code	C an..12	**O**		
1131	Code list identification code	C an..17	**O**		
3055	Code list responsible agency code	C an..3	**D**		
5305	Duty or tax or fee category code	C an..3	**D**		A = Mixed tax rate E = Exempt from tax S = Standard rate
3446	Party tax identifier	C an..20	**O**		
1227	Calculation sequence code	C an..3	**N**		

Segment Notes:

This segment is used to specify the type and rate of tax or duty applicable to the amount specified in the previous MOA segment.

Dependency Notes:
DE C241 and 5305: Tax types and categories will differ from country to country. They are to be defined by

5. Segments Layout

Segment number: 26

national guidelines.

Example:
TAX+7+VAT+++:::21+S'
The value stated in the previous MOA segment is VAT rated at a standard rate of 21%.

5. Segments Layout

Segment number: 27

SG7	- C	99999	-	DOC-DTM-SG8-SG10
SG10	- C	99	-	MOA-TAX-SG11
SG11	- C	9	-	AJT-MOA-RFF
AJT	- M	1	-	Adjustment details

Function:

To identify the reason for an adjustment.

		EDIFACT	GS1	*	Description
4465	Adjustment reason description code	M an..3	**M**		1 = Agreed settlement 3 = Damaged goods 4 = Short delivery 5 = Price query 9 = Invoice error
1082	Line item identifier	C an..6	**N**		

Segment Notes:

This segment is used to indicate the reason for an adjustment to the document monetary amount.

Example:
AJT+4'

5. Segments Layout

Segment number: 28

SG7	- C	99999	-	DOC-DTM-SG8-SG10
SG10	- C	99	-	MOA-TAX-SG11
SG11	- C	9	-	AJT-MOA-RFF
MOA	- M	1	-	Monetary amount

Function:

To specify a monetary amount.

		EDIFACT	GS1	*	Description
C516	MONETARY AMOUNT	M	**M**		
5025	Monetary amount type code qualifier	M an..3	**M**	*	5 = Adjusted amount
5004	Monetary amount	C n..35	**R**		All negative adjustments need to show a negative sign (-).
6345	Currency identification code	C an..3	**N**		
6343	Currency type code qualifier	C an..3	**N**		
4405	Status description code	C an..3	**N**		

Segment Notes:

This segment is used to indicate the value of an adjustment made to the amount specified in the MOA segment in group 10.

Example:
MOA+5:300'

5. Segments Layout

Segment number: 29

SG7	- C	99999	-	DOC-DTM-SG8-SG10
SG10	- C	99	-	MOA-TAX-SG11
SG11	- C	9	-	AJT-MOA-RFF
RFF	- C	1	-	Reference

Function:

To specify a reference.

		EDIFACT	GS1	*	Description
C506	REFERENCE	M	**M**		
1153	Reference code qualifier	M an..3	**M**		ALQ = Returns notice number DQ = Delivery note number ON = Order number (buyer) PL = Price list number VN = Order number (supplier)
1154	Reference identifier	C an..70	**R**		
1156	Document line identifier	C an..6	**N**		
4000	Reference version identifier	C an..35	**N**		
1060	Revision identifier	C an..6	**N**		

Segment Notes:

This segment is used to specify any references related to the previously specified adjustment details.

Example:
RFF+PL:425'

5. Segments Layout

Segment number: 30

UNS - M 1 - Section control				
Function: To separate header, detail and summary sections of a message. Notes: To be used by message designers only when required to avoid ambiguities.				
	EDIFACT	GS1	*	Description
0081 Section identification	M a1	**M**	*	S = Detail/summary section separation
Segment Notes: This segment is used to identify the break between the message detail and message trailer sections. Example: UNS+S'				

5. Segments Layout

Segment number: 31

SG12	- C	99 -	MOA-TAX-DTM
MOA	- M	1 -	Monetary amount

Function:

To specify a monetary amount.

		EDIFACT	GS1	*	Description
C516	MONETARY AMOUNT	M	**M**		
5025	Monetary amount type code qualifier	M an..3	**M**		9 = Amount due/amount payable 12 = Amount remitted 176 = Message total duty/tax/fee amount 263 = Outstanding amount 124 = Tax amount 125 = Taxable amount
5004	Monetary amount	C n..35	**R**		
6345	Currency identification code	C an..3	**N**		
6343	Currency type code qualifier	C an..3	**N**		
4405	Status description code	C an..3	**N**		

Segment Notes:

This segment is used to indicate total values for the complete message and/or the breakdown of tax values for each rate of tax detailed in the following TAX segment.

Example:
MOA+9:2100'

5. Segments Layout

Segment number: 32

SG12	- C	99 -	MOA-TAX-DTM
TAX	- C	9 -	Duty/tax/fee details

Function:

To specify relevant duty/tax/fee information.

		EDIFACT	GS1	*	Description
5283	Duty or tax or fee function code qualifier	M an..3	**M**		5 = Customs duty 7 = Tax
C241	DUTY/TAX/FEE TYPE	C	**D**		
5153	Duty or tax or fee type name code	C an..3	**O**		GST = Goods and services tax VAT = Value added tax
1131	Code list identification code	C an..17	**O**		
3055	Code list responsible agency code	C an..3	**D**		
5152	Duty or tax or fee type name	C an..35	**O**		
C533	DUTY/TAX/FEE ACCOUNT DETAIL	C	**O**		
5289	Duty or tax or fee account code	M an..6	**M**		
1131	Code list identification code	C an..17	**O**		
3055	Code list responsible agency code	C an..3	**D**		
5286	Duty or tax or fee assessment basis value	C an..15	**O**		
C243	DUTY/TAX/FEE DETAIL	C	**A**		
5279	Duty or tax or fee rate code	C an..7	**O**		
1131	Code list identification code	C an..17	**O**		
3055	Code list responsible agency code	C an..3	**D**		
5278	Duty or tax or fee rate	C an..17	**R**		The actual rate of tax/duty.
5273	Duty or tax or fee rate basis code	C an..12	**O**		
1131	Code list identification code	C an..17	**O**		
3055	Code list responsible agency code	C an..3	**D**		
5305	Duty or tax or fee category code	C an..3	**D**		A = Mixed tax rate E = Exempt from tax S = Standard rate
3446	Party tax identifier	C an..20	**O**		
1227	Calculation sequence code	C an..3	**N**		

Segment Notes:

This segment is used to specify the type and rate of tax or duty applicable to the amount specified in the previous MOA segment.

Dependency Notes:
DE C241, and 5305: Tax types and categories will vary from country to country. They should be defined by national guidelines.

5. Segments Layout

Segment number: 32

Example:
TAX+7+VAT+++:::21+S'

5. Segments Layout

Segment number: 33

SG12	- C	99 -	MOA-TAX-DTM
DTM	- C	9 -	Date/time/period

Function:

To specify date, and/or time, or period.

		EDIFACT	GS1	*	Description
C507	DATE/TIME/PERIOD	M	**M**		
2005	Date or time or period function code qualifier	M an..3	**M**		138 = Payment date 140 = Payment due date 315 = Agreement to pay date
2380	Date or time or period value	C an..35	**R**		
2379	Date or time or period format code	C an..3	**R**		102 = CCYYMMDD 718 = CCYYMMDD-CCYYMMDD 803 = Week 804 = Day

Segment Notes:

This segment is used to specify any dates associated with the monetary amounts specified in the previous MOA segment.

Example:
DTM+140:30:804'
Payment is due in 30 days.

5. Segments Layout

Segment number: 34

CNT	- C	1 - Control total			
Function: To provide control total.					
		EDIFACT	GS1	*	Description
C270	CONTROL	M	**M**		
6069	Control total type code qualifier	M an..3	**M**	*	31 = Number of messages
6066	Control total value	M n..18	**M**		
6411	Measurement unit code	C an..3	**N**		
Segment Notes: This segment is used to indicate controls. Example: CNT+31:12'					

5. Segments Layout

Segment number: 35

UNT - M 1 - Message trailer					
Function: To end and check the completeness of a message. Notes: 1. 0062, the value shall be identical to the value in 0062 in the corresponding UNH segment.					
		EDIFACT	GS1	*	Description
0074	Number of segments in a message	M n..10	**M**		The total number of segments in the message is specified here.
0062	Message reference number	M an..14	**M**		The message reference numbered detailed here should equal the one specified in the UNH segment.
Segment Notes: This segment is a mandatory UN/EDIFACT segment. It must always be the last segment in the message. Example: UNT+33+ME000001'					

5. Segments Layout

Segment number: 36

UNZ - M 1 - Interchange trailer					
Function: To end and check the completeness of an interchange. Notes: 1. 0020, the value shall be identical to the value in 0020 in the corresponding UNB segment.					
		EDIFACT	GS1	*	Description
0036	Interchange control count	M n..6	**M**		Number of messages or functional groups within an interchange.
0020	Interchange control reference	M an..14	**M**		Identical to DE 0020 in UNB segment.
Segment Notes: This segment is used to provide the trailer of an interchange. DE 0036: If functional groups are used, this is the number of functional groups within the interchange. If functional groups are not used, this is the number of messages within the interchange. UNZ+5+12345555'					

6. Examples

Example 1

The following is an example of a commercial account summary message between a supplier identified by GLN 5411111123451 and a buyer identified by GLN 5412345123453. The message sent on the 1st of July 2002 covers the invoicing period of the 1st to the 30th of June 2002 and has the message number CA5422. The payment currency of the message is defined as being the Euro (EUR).

The message details three transactions, an outstanding invoice and two payments.

The invoice 56241 dated the 14th of May 2002 with the value of 5300 EUR is indicated as being outstanding.

The payments are identified by the remittance advice numbers 3412 and 3480 and are dated the 12th and 25th of June 2002 respectively. Remittance advice 3480 details a payment of 12800 for the full amount invoiced.

The amount remitted for remittance advice number 3412 was 65000 EUR. An adjustment of 7000 EUR was made due to an invoice error and the delivery note number 391 is quoted as supporting information for the actual delivery.

The summary section of the message details the remitted amounts and the outstanding amount by tax rate. 29800 EUR was remitted at 10% VAT, 6000 EUR at 12% VAT, and 42000 EUR at 21% VAT. The outstanding amount of 5300 EUR for the invoice 56241 is detailed as being all at the VAT rate of 21%.

UNH+ ME000001+COACSU:D:01B:UN:EAN004’	Message header
BGM+49E::9+CA5422+9’	Commercial account summary number CA5422
DTM+137:20020701:102'	Message date 1st July 2002
DTM+263:2002060120020630:718'	Message relates to invoicing period 1st to 30th June 2002
NAD+BY+5412345123453::9'	Buyer identified by GLN 5412345123453
NAD+SU+5411111123451::9'	Supplier identified by GLN 5411111123451
CUX+2:BF:11'	Payment currency is the Euro (EUR)
DOC+380+56241'	First document is commercial invoice number 56241
DTM+137:20020514:102'	Document date is the 14th of May 2002
MOA+9:5300'	Amount due/payable equals 5300 EUR
DOC+481+3412'	Second document is remittance advice number 3412
DTM+137:20020612:102'	Document date is 12th of June 2002
MOA+12:65000'	Amount remitted equals 65000 EUR
MOA+39:72000'	Invoice total amount equals 72000 EUR
AJT+9'	Reason for adjustment is invoice error
MOA+5:-7000'	Adjusted negative amount equals -7000 EUR
RFF+DQ:391'	Reference to delivery note number 391 provided to support reason for adjustment
DOC+481+3480'	Third document is remittance advice number 3480

6. Examples

DTM+137:20020625:102'	Document date is 25th of June 2002
MOA+12:12800'	Amount remitted equals 12800 EUR
MOA+39:12800'	Invoice total amount equals 12800 EUR
UNS+S'	Message detail/summary section separator
MOA+12:29800'	Amount remitted equals 29800 EUR
TAX+7+VAT+++:::10+S'	Which is subject to vat rate of 10%
MOA+12:6000'	Amount remitted equals 6000 EUR
TAX+7+VAT+++:::12+S'	Which is subject to vat rate of 12%
MOA+12:42000'	Amount remitted equals 42000 EUR
TAX+7+VAT+++:::21+S'	Which is subject to vat rate of 21%
MOA+263:5300'	Outstanding amount equals 5300 EUR
TAX+7+VAT+++:::12+S'	Which is subject to vat rate of 12%
UNT+31+ME000001'	Total number of segments in the message equals 31

Example 2

The following is an example of a commercial account summary message response between a buyer identified by GLN 5412345123453 and a supplier identified by GLN 5411111123451. The message is sent on the 2nd of July 2002 and has the message number CASR1234. This document is a response to the commercial account summary CA5444, received the 1st July 2002. The payment currency of the message is defined as being the Euro (EUR).

The message details two invoices:

The invoice 56241 dated the 14th of June 2002 with the value of 5300 EUR.

The invoice 56243 dated the 15th of June 2002 with the value of 6500 EUR. An adjustment of 700 EUR was made due to an invoice error.

UNH+ ME000001+COACSU:D:01B:UN:EAN004’	Message header
BGM+397+CASR1234+9’	Commercial account summary number CASR1234
DTM+137:20020702:102'	Message date 2nd July 2002
RFF+APQ:12345’	Reference to a previous COASCU
NAD+BY+5412345123453::9'	Buyer identified by GLN 5412345123453
NAD+SU+5411111123451::9'	Supplier identified by GLN 5411111123451
CUX+2:EUR:11'	Payment currency is the Euro (EUR)
DOC+380+56241'	First document is commercial invoice number 56241

6. Examples

DTM+137:20020614:102'	Document date is the 14th of June 2002
MOA+9:5300'	Amount due/payable equals 5300 EUR
DOC+380+56243'	Second document is commercial invoice number 56243
DTM+137:20020615:102'	Document date is the 15th of June 2002
MOA+9:6500'	Amount due/payable equals 6500 EUR
AJT+9'	Reason for adjustment is invoice error
MOA+5:-700'	Adjusted negative amount equals –700 EUR
UNS+S'	Message detail/summary section separator
MOA+9:11800'	Total Amount due/payable equals 11800 EUR
UNT+18+ME000001'	Total number of segments in the message equals 18

Note:
The EDI interchange will include the UNB..UNZ segments and, if applicable, the UNG..UNE segments. (See part 1 section 5.7).