EANCOM® 2002 S4

CREMUL

Multiple credit advice message

Edition 2016 Upd. 2021

1. Introduction 2
2. Message Structure Chart 4
3. Branching Diagram 6
4. Segments Description 17
5. Segments Layout 25
6. Example(s) 119

1. Introduction

Status

MESSAGE TYPE	: CREMUL
REFERENCE DIRECTORY	: D.01B
EANCOM® SUBSET VERSION	: 003

Definition

A Multiple Credit Advice message is sent by an Account Servicing Financial Institution to the Account Owner or to a third party, which has agreed bilaterally in advance, that its account(s) has been or will be credited for specified amount(s) on the date(s) indicated, in settlement of the referenced business transaction(s).

Principles

A Multiple Credit Advice message may cover the financial settlement of one or more commercial trade transactions, such as invoices, debit notes, etc.

Several credit accounts, value dates, entry dates and currencies may be specified.

The message may be used to indicate the charges associated with the transaction(s) detailed within the message and also the party responsible for their payment.

Notes

This section should be read in conjunction with the Branching Diagram and the Segment Table which indicate mandatory, conditional and repeating requirements.

The following semantic principles which apply to the message are intended to facilitate a better understanding of the message:

The Multiple Credit Advice message is structured in three levels, A, B, and C.

- Level A contains data related to routing criteria for the whole message and is contained in the heading section, segment group 1 through 3, the CNT segment, group 28, and the UNT segment.
- Level B contains data from the credit side (one credit account, one currency, one execution date) and data which applies to all further details of C level(s) and is contained in segment group 4 through 9.
- Level C contains detailed data related to the transactions which make up the credit side and is contained in segment group 10 through 27.

The structure of the message is designed to allow several B levels, each B level being followed by its related C levels.

Using the message for simple, extended, or multiple transactions

The multiple credit advice message may be used by a beneficiary's bank to transmit single, extended, or multiple credit advices to a beneficiary.

A **credit advice** is a message from a bank to its customer providing notification that funds have been credited to its account(s) and identifying the party responsible for the credit.

A simple credit advice always relates to **one credit** from **one ordering customer** to the account(s) of **one beneficiary**. To use the CREMUL message as a simple credit advice the following data will be provided;

Data	Where
Ordering Customer Data / Beneficiary data	NAD - Group 14 FII - Groups 6 and 10

1. Introduction

Credit Values	MOA - segment group 4 (Total CREDIT value) MOA - segment group 13 (Individual CREDIT transaction values)
Bank Reference Number	RFF - segment group 5 and 11 (qualifier ACK data element 1153)
Ordering Customer Reference Number	RFF - segment group 5 and 11 (qualifier CR data element 1153 - taken from PAYMUL)
Payment Data	Segment group 20 (PRC segment) Segment group 21 (DOC segment) Segment group 27 (GIS segment) Remittance data previously provided in the EANCOM® REMADV message.

An extended credit advice always relates to **many credits** from **one ordering customer** to the account of **one beneficiary**. To use the CREMUL message as an extended credit advice the following data will be provided;

Data	**Where**
Ordering Customer Data / Beneficiary data	NAD - Group 14 FII - Groups 6 and 10
Credit Values	MOA - Group 4 (Total CREDIT value) MOA - Group 13 (Individual CREDIT transaction values)
Bank Reference Number	RFF - Group 5 and 11 (qualifier AIK data element 1153)
Ordering Customer Reference Number	RFF - Group 5 and 11 (qualifier CR data element 1153 - taken from PAYMUL)
Payment Data	Group 20 (PRC segment) Group 21 (as many segments as required) to identify each payment made. Group 27 (GIS segment)

A multiple credit advice always relates to **many credits** from **many ordering customers** to the account(s) of **one beneficiary**. The complete structure of the CREMUL message may be transmitted in order to provide multiple credit advices.

Remittance data

Included in the multiple credit advice message is the functionality to provide detailed remittance data. This data is simply **transmitted** by the ordering customer's bank to the beneficiary's bank (is not changed by either bank) for ultimate transmission to the beneficiary in the multiple credit advice.

In addition to this facility EANCOM® also includes the Remittance Advice message (REMADV). The method to be used to communicate remittance advice data depends on user requirements.

If the user wishes to transmit the remittance information using the EANCOM® REMADV message a link is established between the credit advice and the REMADV using the RFF segment in segment group 11.

2. Message Structure Chart

UNA		1	C	1	- Service string advice
UNB		2	M	1	- Interchange header
Multiple Credit Advice Heading Section					
UNH		3	M	1	- Message header
BGM		4	M	1	- Beginning of message
DTM		5	C	1	- Date/time/period
BUS		6	C	1	- Business function
SG2			C	5	- FII
FII		7	M	1	- Financial institution information
SG3			C	3	- NAD
NAD		8	M	1	- Name and address
Multiple Credit Advice Detail Section - Level B					
SG4			M	9999	- LIN-DTM-BUS-MOA-SG5-SG6-SG7-SG10
LIN		9	M	1	- Line item
DTM		10	C	2	- Date/time/period
BUS		11	C	1	- Business function
MOA		12	M	2	- Monetary amount
SG5	*		M	3	- RFF-DTM
RFF		13	M	1	- Reference
DTM	+	14	C	1	- Date/time/period
SG6			M	1	- FII
FII		15	M	1	- Financial institution information
SG7			C	5	- FCA-MOA-SG8
FCA		16	M	1	- Financial charges allocation
MOA		17	C	2	- Monetary amount
SG8			C	6	- ALC-PCD-MOA-CUX-DTM-SG9
ALC		18	M	1	- Allowance or charge
PCD		19	C	1	- Percentage details
MOA		20	C	2	- Monetary amount
CUX		21	C	1	- Currencies
DTM		22	C	1	- Date/time/period
SG9			C	5	- TAX-MOA
TAX		23	M	1	- Duty/tax/fee details
MOA		24	C	2	- Monetary amount
Multiple Credit Advice Detail Section - Level C					
SG10			M	99999	- SEQ-DTM-BUS-FII-SG11-SG12-SG13-SG14-SG15-SG16-SG17-SG
SEQ		25	M	1	- Sequence details
DTM		26	C	3	- Date/time/period
BUS		27	C	1	- Business function
FII		28	M	2	- Financial institution information
SG11			C	5	- RFF-DTM
RFF		29	M	1	- Reference
DTM		30	C	1	- Date/time/period
SG12			C	1	- PAI
PAI		31	M	1	- Payment instructions
SG13	*		M	4	- MOA-CUX-DTM-RFF
MOA		32	M	1	- Monetary amount
CUX	+	33	C	1	- Currencies
DTM		34	C	2	- Date/time/period
RFF		35	C	1	- Reference
SG14			C	3	- NAD-CTA-COM
NAD		36	M	1	- Name and address
CTA		37	C	1	- Contact information
COM		38	C	5	- Communication contact
SG15			C	3	- INP-FTX-DTM
INP		39	M	1	- Parties and instruction
FTX		40	C	1	- Free text

2. Message Structure Chart

DTM		41	C	1	- Date/time/period
SG16			C	10	- GIS-MOA-LOC-NAD-RCS-FTX
GIS	X	42	M	1	- General indicator
MOA		43	C	1	- Monetary amount
LOC		44	C	2	- Place/location identification
NAD		45	C	1	- Name and address
RCS		46	C	1	- Requirements and conditions
FTX		47	C	10	- Free text
SG17			C	5	- FCA-MOA-SG18
FCA		48	M	1	- Financial charges allocation
MOA		49	C	2	- Monetary amount
SG18			C	20	- ALC-PCD-MOA-CUX-DTM-SG19
ALC		50	M	1	- Allowance or charge
PCD		51	C	1	- Percentage details
MOA		52	C	2	- Monetary amount
CUX		53	C	1	- Currencies
DTM		54	C	2	- Date/time/period
SG19			C	5	- TAX-MOA
TAX		55	M	1	- Duty/tax/fee details
MOA		56	C	2	- Monetary amount
SG20			C	1	- PRC-FTX-SG21-SG27
PRC		57	M	1	- Process identification
FTX		58	C	5	- Free text
SG21			C	9999	- DOC-MOA-DTM-RFF-NAD-SG22-SG23-SG24
DOC		59	M	1	- Document/message details
MOA		60	C	5	- Monetary amount
DTM		61	C	5	- Date/time/period
RFF		62	C	5	- Reference
NAD		63	C	2	- Name and address
SG22			C	5	- CUX-DTM
CUX		64	M	1	- Currencies
DTM		65	C	1	- Date/time/period
SG23			C	100	- AJT-MOA-RFF
AJT		66	M	1	- Adjustment details
MOA		67	C	1	- Monetary amount
RFF		68	C	1	- Reference
SG24			C	9999	- DLI-MOA-PIA-DTM-SG26
DLI		69	M	1	- Document line identification
MOA		70	C	5	- Monetary amount
PIA		71	C	5	- Additional product id
DTM		72	C	5	- Date/time/period
SG26			C	10	- AJT-MOA-RFF
AJT		73	M	1	- Adjustment details
MOA		74	C	1	- Monetary amount
RFF		75	C	1	- Reference
SG27			C	1	- GIS-MOA
GIS	X	76	M	1	- General indicator
MOA		77	C	5	- Monetary amount

Multiple Credit Advice Summary Section

CNT		78	C	5	- Control total
SG28			C	5	- AUT-DTM
AUT		79	M	1	- Authentication result
DTM		80	C	1	- Date/time/period
UNT		81	M	1	- Message trailer
UNZ		82	M	1	- Interchange trailer

3. Branching Diagram

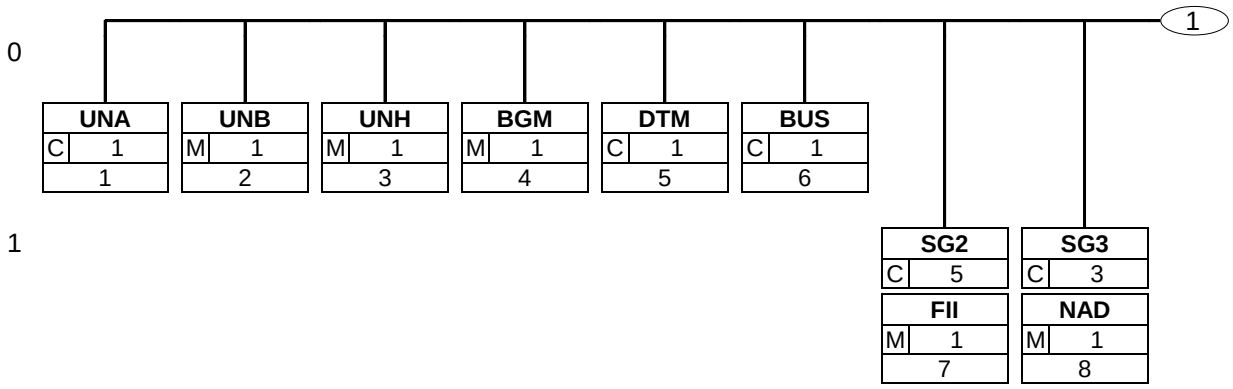

3. Branching Diagram

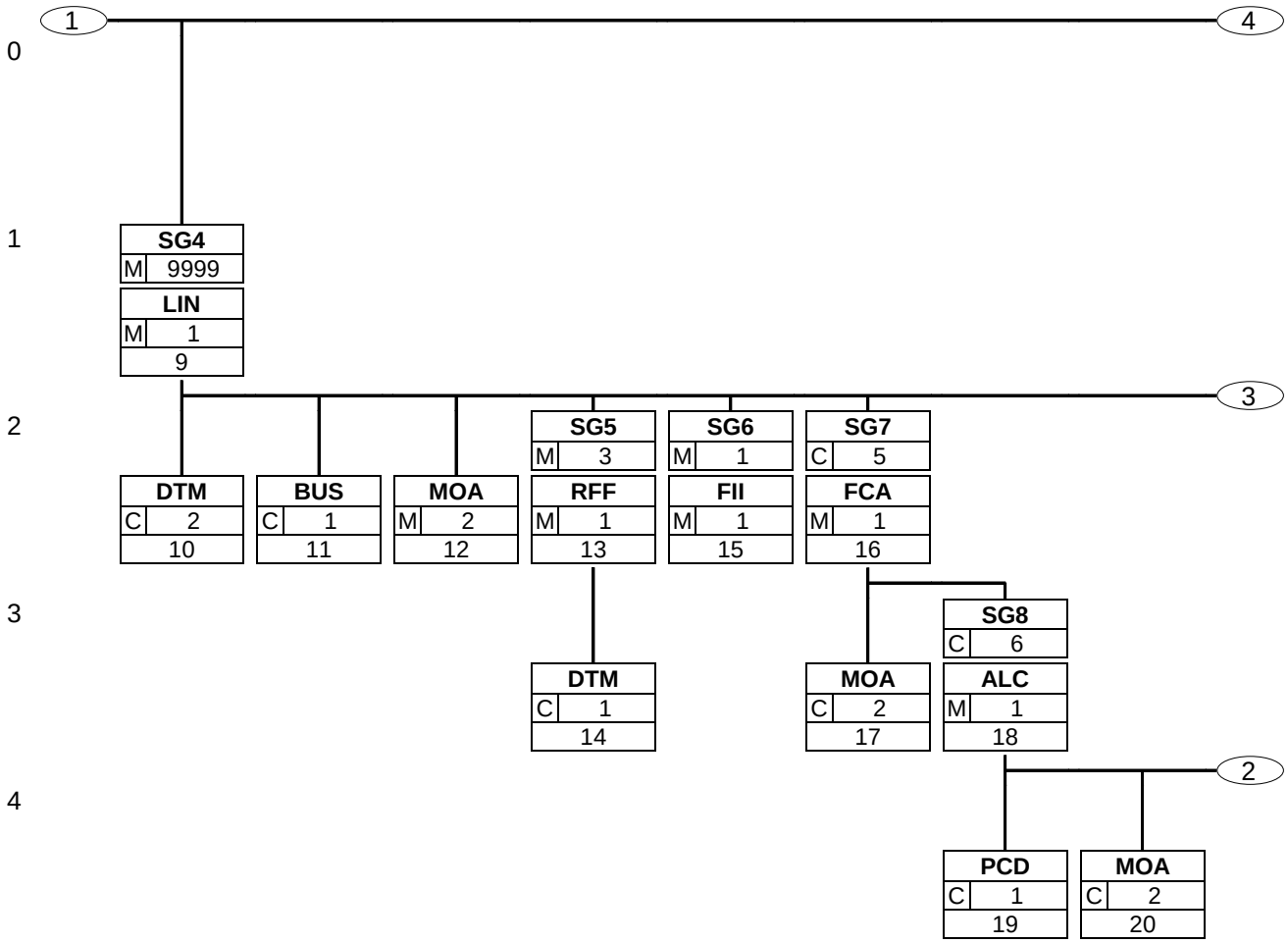

3. Branching Diagram

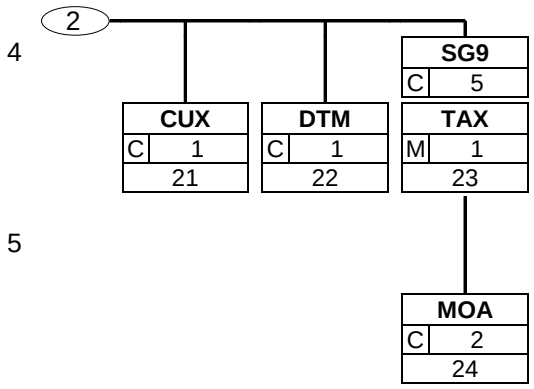

3. Branching Diagram

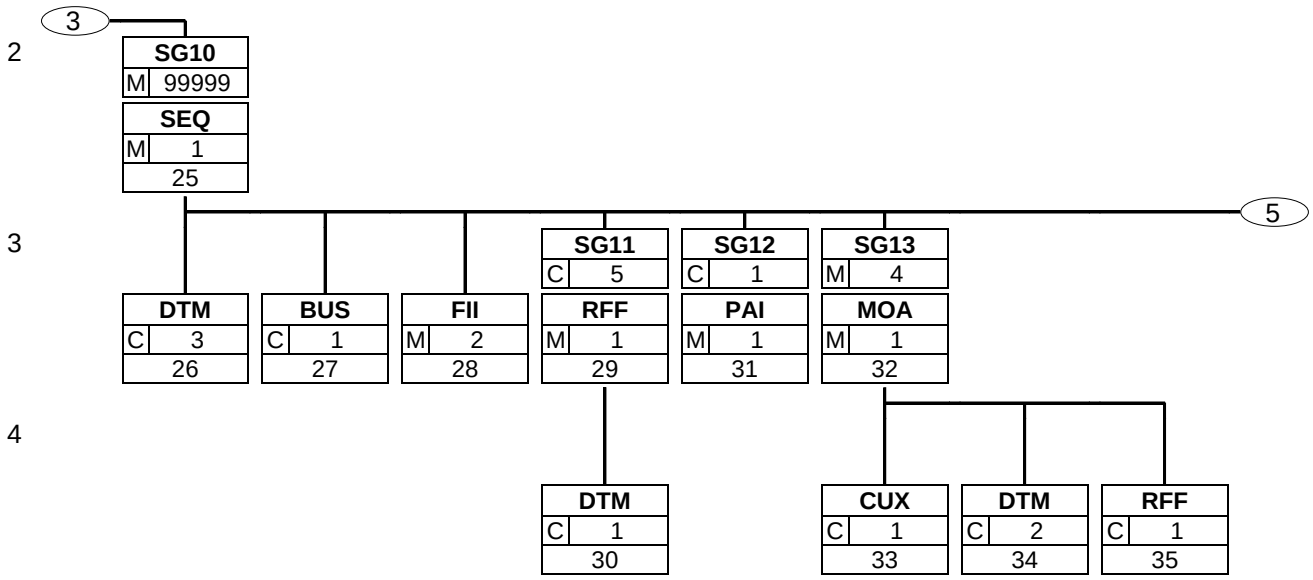

3. Branching Diagram

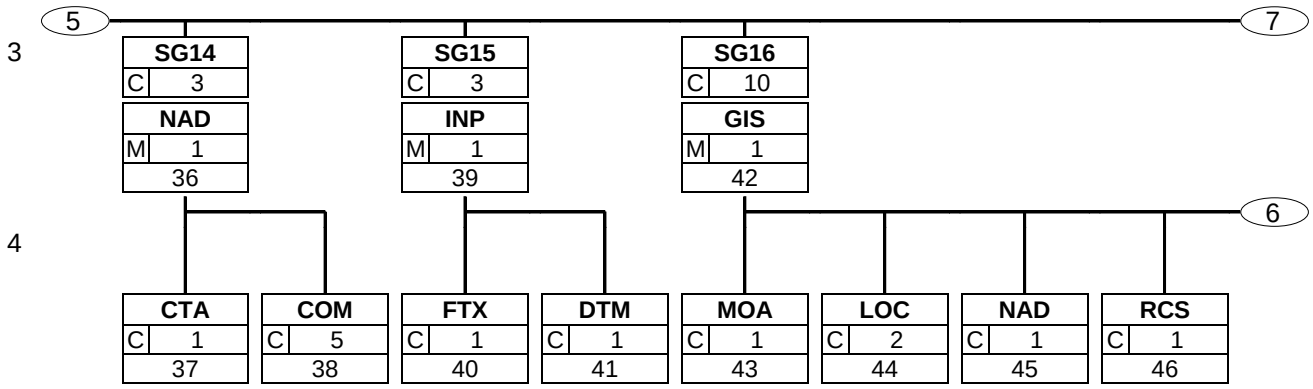

3. Branching Diagram

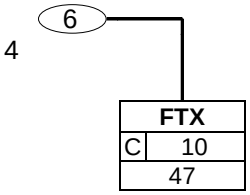

3. Branching Diagram

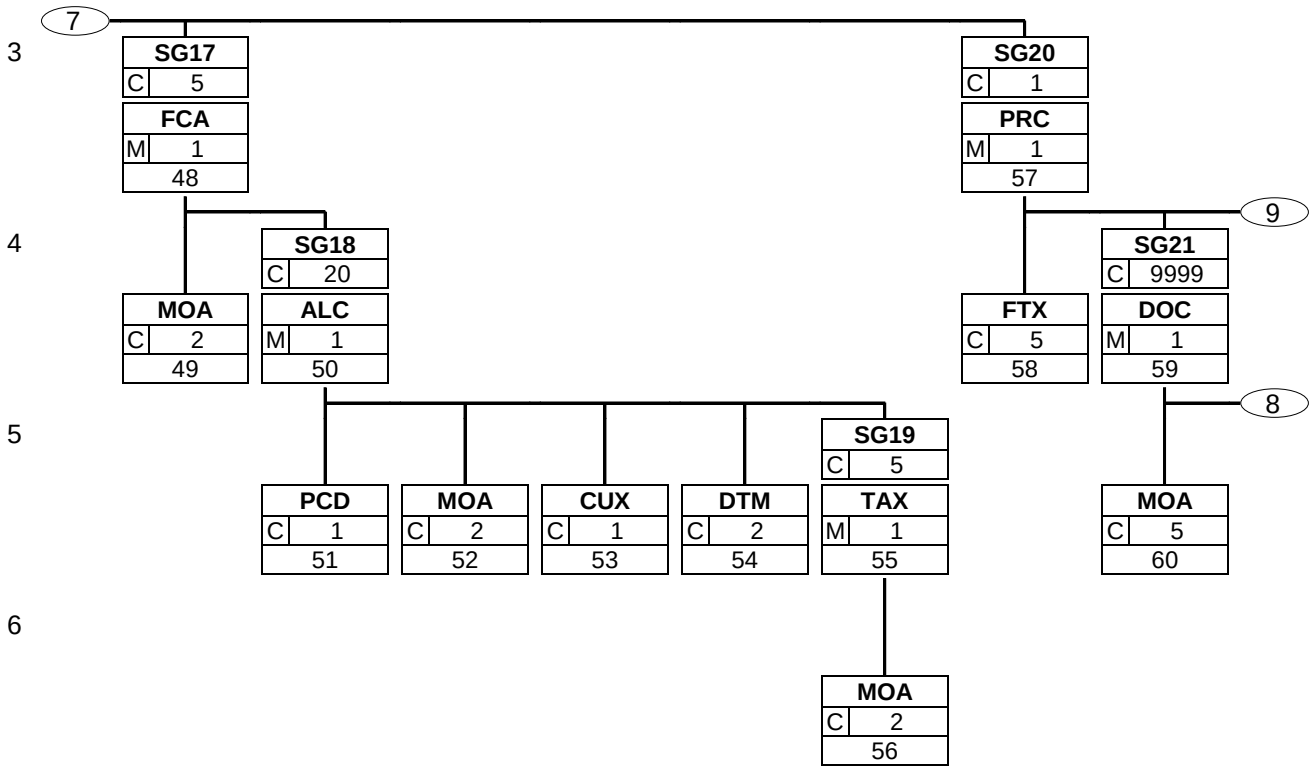

3. Branching Diagram

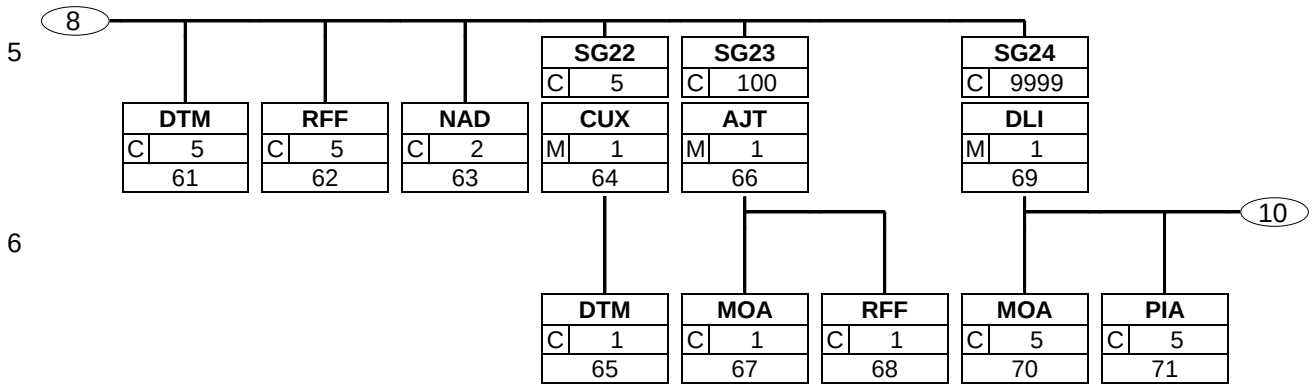

3. Branching Diagram

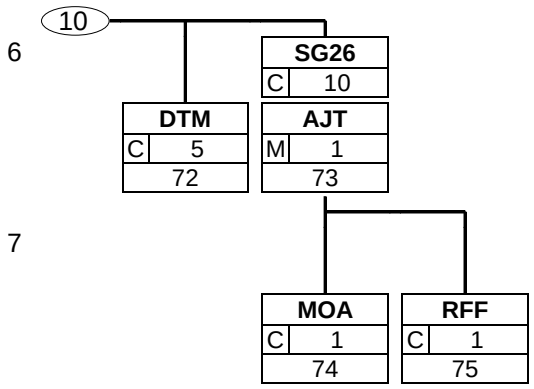

3. Branching Diagram

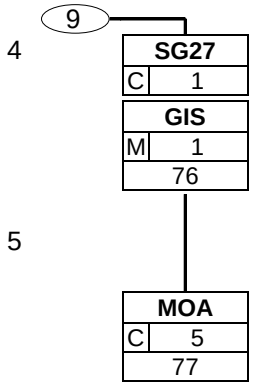

3. Branching Diagram

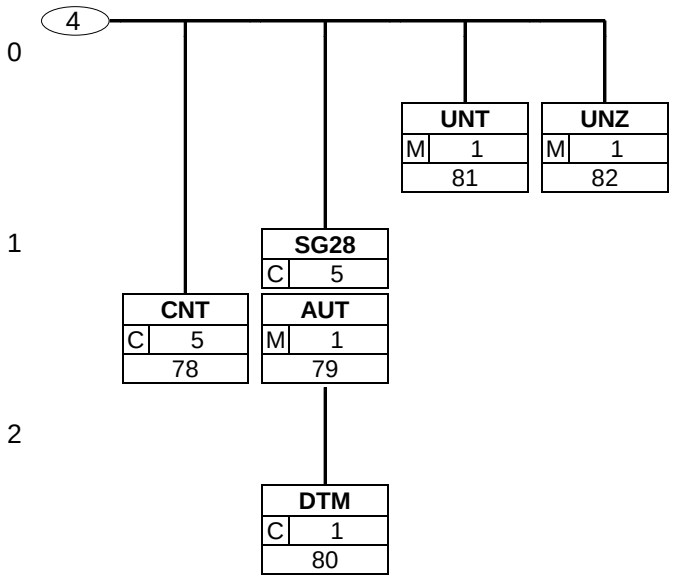

4. Segments Description

UNA - C 1 - Service string advice

This segment is used to inform the receiver of the interchange that a set of service string characters which are different to the default characters are being used.

UNB - M 1 - Interchange header

This segment is used to envelope the interchange, as well as to identify both, the party to whom the interchange is sent and the party who has sent the interchange. The principle of the UNB segment is the same as a physical envelope which covers one or more letters or documents, and which details, both the address where delivery is to take place and the address from where the envelope has come.

Multiple Credit Advice Heading Section

UNH - M 1 - Message header

This segment is used to head, identify and specify a message.

BGM - M 1 - Beginning of message

This segment is used to indicate the type and function of a message and to transmit the identifying number.

DTM - C 1 - Date/time/period

This segment is used to specify the date on which the Multiple Credit Advice message was created.

BUS - C 1 - Business function

This segment is used to indicate whether all of the credits contained in the message are Domestic, European, or International.

SG2 - C 5 - **FII**

A group of segments identifying the financial institutions involved in the multiple credit advice.

FII - M 1 - Financial institution information

This segment is used to identify the financial institution sending the multiple credit advice.

SG3 - C 3 - **NAD**

A group of segments identifying the name(s) and address(es) of non-financial parties involved in the transaction and their function.

NAD - M 1 - Name and address

This segment is used to identify the recipient of the multiple credit advice message.

Multiple Credit Advice Detail Section - Level B

SG4 - M 9999 - **LIN-DTM-BUS-MOA-SG5-SG6-SG7-SG10**

A group of segments containing information details which are relevant to all transactions specified in the message.

LIN - M 1 - Line item

This segment is used to identify a line within the multiple credit advice by means of a unique line number.

DTM - C 2 - Date/time/period

This segment is used to specify the posting and value dates for the credit instruction.

BUS - C 1 - Business function

This segment is used to identify the characteristics of the credit instructions detailed in level C of the message.

4. Segments Description

MOA - M 2 - Monetary amount

This segment is used to specify the total credit amount, and/or information amount, and if necessary the relevant currency.

SG5 - M 3 - **RFF-DTM**

A segment group containing references related to the payments, as well as relevant dates.

RFF - M 1 - Reference

This segment is used to provide reference numbers related to the payments contained in the message.

DTM - C 1 - Date/time/period

This segment contains data relevant to the related references.

SG6 - M 1 - **FII**

A group of segments identifying the account that has been or will be credited.

FII - M 1 - Financial institution information

This segment is used to identify the financial institution and account information related to the beneficiary for the credit instruction.

SG7 - C 5 - **FCA-MOA-SG8**

A group of segments providing full details of all charges or allowances, and associated taxes, that apply to the total amount, together with information as to who bears the charges and to which account they have been directed. Where charges are subject to taxation this may also be specified.

FCA - M 1 - Financial charges allocation

This segment is used to identify the method for allocating charges and allowances, to a Beneficiary or Payee account. It may also identify an account where charges/ allowances should be directed when different to the primary account.

MOA - C 2 - Monetary amount

This segment is used to specify the monetary value of all allowances and charges related to the credit transaction and if necessary the basis for the allowances and charges.

SG8 - C 6 - **ALC-PCD-MOA-CUX-DTM-SG9**

A group of segments providing a detailed breakdown of all charges (or allowances) and associated charges (or allowances).

ALC - M 1 - Allowance or charge

This segment is used to provide a breakdown of all allowances and charges associated with the transaction.

PCD - C 1 - Percentage details

This segment is used to specify the percentage to be used when calculating the allowance or charge.

MOA - C 2 - Monetary amount

This segment is used to specify the amount and if necessary the basis amount to be used when calculating the allowances or charges.

CUX - C 1 - Currencies

This segment is used to provide the exchange rate related to the allowances or charges.

DTM - C 1 - Date/time/period

This segment is used to specify the date on which a rate of exchange was quoted.

SG9 - C 5 - **TAX-MOA**

A group of segments describing any taxes associated with charges and their amount.

4. Segments Description

TAX - M 1 - Duty/tax/fee details

This segment is used to specify any taxes associated with the allowances and charges.

MOA - C 2 - Monetary amount

This segment is used to indicate the tax or duty amount for the tax rates specified in the previous TAX segment.

Multiple Credit Advice Detail Section - Level C

SG10 - M 99999 - **SEQ-DTM-BUS-FII-SG11-SG12-SG13-SG14-SG15-SG16-SG17-SG20**

A segment group providing details regarding the individual transactions, such as dates, financial institutions, account numbers.

SEQ - M 1 - Sequence details

This segment is used to identify the start of the specification of individual transactions (level C) by means of a sequence number within the current line number. The sequence number should be reset to one for each occurrence of a new line number (in LIN segment).

DTM - C 3 - Date/time/period

This segment is used to specify dates related to references provided in the previous segment.

BUS - C 1 - Business function

This segment is used to identify the characteristics of the individual credit transactions.

FII - M 2 - Financial institution information

This segment is used to identify the financial institution and account number(s) related to the current transaction.

SG11 - C 5 - **RFF-DTM**

A group of segments containing references of other messages and transactions, with relevant date(s)/time(s).

RFF - M 1 - Reference

This segment is used to identify any references related to the credit entry.

DTM - C 1 - Date/time/period

This segment is used to specify dates relevant to the beneficiary's side of the credit entry.

SG12 - C 1 - **PAI**

A group of segments specifying conditions, guarantees, method and channel of payment used.

PAI - M 1 - Payment instructions

This segment is used to specify the payment channel which has been used. It is recommended that this segment is only used if no previous agreements are in place between trading partners.

SG13 - M 4 - **MOA-CUX-DTM-RFF**

A group of segments identifying the monetary amounts and, if necessary, the currencies, exchange rate and date for the amount of the transaction.

MOA - M 1 - Monetary amount

This segment is used to specify the booked amount which will be or has been credited to the beneficiary's account. If necessary it may also specify an information amount related to the credit transaction.

CUX - C 1 - Currencies

This segment is used to identify the source currency and the target currency of the transaction.

4. Segments Description

DTM - C 2	- Date/time/period	
	This segment is used to specify dates relevant to the preceding monetary amount or the following reference.	
RFF - C 1	- Reference	
	This segment is used to identify a transaction negotiated between the beneficiary (or payee) and the beneficiary's bank.	
SG14 - C 3	- **NAD-CTA-COM**	
	A group of segments identifying the name and address of non-financial parties involved in the message, their function and their contacts.	
NAD - M 1	- Name and address	
	This segment is used to identify the ordering customer of the credit instruction.	
CTA - C 1	- Contact information	
	This segment is used to provide contact details relevant for the party identified in the previous NAD segment.	
COM - C 5	- Communication contact	
	This segment is used to provide communications details relevant to the contact identified in the CTA segment.	
SG15 - C 3	- **INP-FTX-DTM**	
	A group of segments containing instructions relating to parties identified in the NAD and FII segments in Segment Group 2 and/or Segment Group 3. It specifies action taken or to be taken by the identified parties, and the date (and optionally time) by which such action was taken or needs to be taken.	
INP - M 1	- Parties and instruction	
	This segment is used to identify the party who must carry out an instruction from the ordering customer, and the party to whom the instruction is intended.	
FTX - C 1	- Free text	
	This segment is used to provide additional coded or free text instructions to those provided in the INP segment.	
DTM - C 1	- Date/time/period	
	This segment is used to specify the earliest and latest dates by which the instructions must be carried out.	
SG16 - C 10	- **GIS-MOA-LOC-NAD-RCS-FTX**	
	A group of segments providing information for subsequent use by regulatory authorities requiring statistical and other types of data. It also identifies the regulatory authority for which the information is intended followed by the information itself.	
GIS - M 1	- General indicator	
	This segment is used to indicate that the information contained in the following segments will be passed on to and processed by the central and regulatory party identified in the NAD segment.	
MOA - C 1	- Monetary amount	
	This segment is used to specify monetary amounts which must be reported to the regulatory party identified in the NAD segment.	
LOC - C 2	- Place/location identification	
	This segment is used to indicate any locations relevant to the regulatory party identified in the NAD segment.	
NAD - C 1	- Name and address	
	This segment is used to identify the central and regulatory authority specifying the regulatory information detailed in the GIS and FTX segments.	

4. Segments Description

RCS - C 1 - Requirements and conditions

This segment is used to indicate any requirements and conditions related to the transaction which is being reported to the regulatory authorities.

FTX - C 10 - Free text

This segment is used to provide free or coded text information required by the regulatory authorities. The form and content of this segment is dependent upon the central bank or regulatory authority's requirements.

SG17 - C 5 - **FCA-MOA-SG18**

A group of segments providing full details of all charges or allowances, and associated taxes, that apply to a particular transaction, together with information as to who bears the charges and to which account they have been directed. A total value of all charges plus allowances may be given for every account to which charges may be directed. Where charges are subject to taxation this may also be specified.

FCA - M 1 - Financial charges allocation

This segment is used to identify the method for allocating charges and allowances, to a Beneficiary or Payee account. It may also identify an account where charges/ allowances should be directed when different to the primary account.

MOA - C 2 - Monetary amount

This segment is used to specify the monetary value of all allowances and charges related to individual credit transactions and if necessary the basis for the allowances and charges.

SG18 - C 20 - **ALC-PCD-MOA-CUX-DTM-SG19**

A group of segments providing a detailed breakdown of all charges (or allowances) and associated charges (or allowances).

ALC - M 1 - Allowance or charge

This segment is used to provide a breakdown of all allowances and charges associated with the transaction.

PCD - C 1 - Percentage details

This segment is used to specify the percentage to be used when calculating the allowance or charge.

MOA - C 2 - Monetary amount

This segment is used to specify the amount and if necessary the basis amount to be used when calculating the allowances or charges.

CUX - C 1 - Currencies

This segment is used to provide the exchange rate related to the allowances or charges.

DTM - C 2 - Date/time/period

This segment is used to specify the date on which a rate of exchange was quoted.

SG19 - C 5 - **TAX-MOA**

A group of segments describing any taxes associated with charges and their amount.

TAX - M 1 - Duty/tax/fee details

This segment is used to specify any taxes associated with the allowances and charges.

MOA - C 2 - Monetary amount

This segment is used to indicate the tax or duty amount for the tax rates specified in the previous TAX segment.

4. Segments Description

SG20 - C 1 - **PRC-FTX-SG21-SG27**

A group of segments containing the details of payment. The content of these segments is passed through the banking chain from the Ordering Customer to the Beneficiary.

PRC - M 1 - Process identification

This segment is used to provide processing information related to the credit instruction.

FTX - C 5 - Free text

This segment is used to provide free or coded text information related to the processing of the payment.

SG21 - C 9999 - **DOC-MOA-DTM-RFF-NAD-SG22-SG23-SG24**

A group of segments providing details of all documents, e.g.invoices, statements, despatch advices, etc., to which the multiple credit advice refers. It includes information on the monetary amounts for each document and on any adjustments (with an indication of the reason for adjustments) and discounts.

DOC - M 1 - Document/message details

This segment is used to provide details of the documents, e.g. a group of invoices, to which the multiple credit advice refers.

MOA - C 5 - Monetary amount

This segment is used to specify monetary amounts related to the complete document identified in the previous DOC segment.

DTM - C 5 - Date/time/period

This segment is used to specify dates related to the document identified in the DOC segment.

RFF - C 5 - Reference

This segment is used to provide any additional references relevant to the currently identified DOC segment.

NAD - C 2 - Name and address

This segment is used to identify any additional parties related to the currently identified document, e.g. delivery party.

SG22 - C 5 - **CUX-DTM**

A group of segments specifying the currencies and the related dates/periods valid to the referenced document where different to the reference currency.

CUX - M 1 - Currencies

This segment is used to provide currency rate of exchange information used to convert amounts specified in the MOA segment for the referenced document, to an amount expressed in terms of the remittance/payment currency. This CUX segment will only be used when the currency of its rate of exchange is different from the default global currency or its rate of exchange specified in the CUX segment at heading level.

DTM - C 1 - Date/time/period

This segment is used to specify any dates related to the currency information specified in the previous CUX segment.

SG23 - C 100 - **AJT-MOA-RFF**

A group of segments indicating adjustment amounts and their referenced documents.

AJT - M 1 - Adjustment details

This segment is used to indicate the reason for an adjustment to the current document.

4. Segments Description

MOA - C 1 - Monetary amount

This segment is used to indicate the value of the adjusted amount for the current document.

RFF - C 1 - Reference

This segment is used to specify any references associated with the adjusted amounts.

SG24 - C 9999 - **DLI-MOA-PIA-DTM-SG26**

A group of segments which may be used when required to provide details of individual line items in the reference document.

DLI - M 1 - Document line identification

This segment is used to identify individual line items within the document identified in the DOC segment.

MOA - C 5 - Monetary amount

This segment is used to indicate the amount due and the amount remitted for the line item identified in the DLI segment for the current document.

PIA - C 5 - Additional product id

This segment is used to provide the product identification of the line item detailed in the DLI segment for the current document.

DTM - C 5 - Date/time/period

This segment is used to specify any dates which are relevant to the current line item.

SG26 - C 10 - **AJT-MOA-RFF**

A group of segments indicating adjustment amounts and their referenced documents for this line item.

AJT - M 1 - Adjustment details

This segment is used to indicate the reason for an adjustment to the current line identified in the DLI segment.

MOA - C 1 - Monetary amount

This segment is used to indicate the value of the adjusted amount for the current line item.

RFF - C 1 - Reference

This segment is used to specify any references associated with the adjustment amounts for the current line item.

SG27 - C 1 - **GIS-MOA**

A group of segments indicating the end of the details of payment and specifying hash total amounts for control purposes.

GIS - M 1 - General indicator

This segment is used to indicate the end of the detail of payment.

MOA - C 5 - Monetary amount

This segment is used to indicate the total amount for level C for control purposes. The figure detailed here is simply an accumulation of the values specified in all MOA segments in level C regardless of the qualifiers used in DE 5025.

Multiple Credit Advice Summary Section

CNT - C 5 - Control total

This segment is used to provide application data for message control purposes.

SG28 - C 5 - **AUT-DTM**

A group of segments specifying the details of any authentication (validation) procedures applied to the CREMUL message.

4. Segments Description

AUT - M 1 - Authentication result

This segment is used to provide details of any authentication procedures which have been applied to the multiple credit advice. The use of this segment is, including any algorithms and calculation procedures, dependent on bilaterally agreed conditions between the message sender and receiver.

DTM - C 1 - Date/time/period

This segment is used to provide details related to the date and where necessary, the time, of the multiple credit advice validation.

UNT - M 1 - Message trailer

This segment is a mandatory UN/EDIFACT segment. It must always be the last segment in the message.

UNZ - M 1 - Interchange trailer

This segment is used to provide the trailer of an interchange.

5. Segments Layout

This section describes each segment used in the EANCOM® Multiple Credit Advice message. The original EDIFACT segment layout is listed. The appropriate comments relevant to the EANCOM® subset are indicated.

Notes:

1. The segments are presented in the sequence in which they appear in the message. The segment or segment group tag is followed by the (M)andatory / (C)onditional indicator, the maximum number of occurrences and the segment description.

2. Reading from left to right, in column one, the data element tags and descriptions are shown, followed by in the second column the EDIFACT status (M or C), the field format, and the picture of the data elements. These first pieces of information constitute the original EDIFACT segment layout.

   Following the EDIFACT information, EANCOM® specific information is provided in the third, fourth, and fifth columns. In the third column a status indicator for the use of (C)onditional EDIFACT data elements (see 2.1 through 2.3 below), in the fourth column the restricted indicator (see point 3 on the following page), and in the fifth column notes and code values used for specific data elements in the message.

2.1 (M)andatory data elements in EDIFACT segments retain their status in EANCOM®.

2.2 Additionally, there are five types of status for data elements with a (C)onditional EDIFACT status, whether for simple, component or composite data elements. These are listed below and can be identified when relevant by the following abbreviations:

- REQUIRED	**R**	Indicates that the entity is required and must be sent.
- ADVISED	**A**	Indicates that the entity is advised or recommended.
- DEPENDENT	**D**	Indicates that the entity must be sent in certain conditions, as defined by the relevant explanatory note.
- OPTIONAL	**O**	Indicates that the entity is optional and may be sent at the discretion of the user.
- NOT USED	**N**	Indicates that the entity is not used and should be omitted.

2.3 If a composite is flagged as **N, NOT USED**, all data elements within that composite will have blank status indicators assigned to them.

3. Status indicators detailed in the fourth column which directly relate to the code values detailed in the fifth **column** may have two values:

- RESTRICTED	*****	A data element marked with an asterisk (*) in the fourth column indicates that the listed codes in column five are the only codes available for use with this data element, in this segment, in this message.
- OPEN		All data elements where coded representation of data is possible and a restricted set of code values is not indicated are open (no asterisk in fourth column). The available codes are listed in the EANCOM® Data Elements and Code Sets Directory. Code values may be given as examples or there may be a note on the format or type of code to be used.

4. Different colours are used for the code values in the segment details: restricted codes are in red and open codes in blue.

5. Segments Layout

Segment number: 1

UNA - C 1 - Service string advice

Function:

The service string advice shall begin with the upper case characters UNA immediately followed by six characters in the order shown below. The space character shall not be used in positions 010, 020, 040, 050 or 060. The same character shall not be used in more than one position of the UNA.

		EDIFACT	GS1	*	Description
UNA1	Component data element separator	M an1	**M**	*	Used as a separator between component data elements contained within a composite data element (default value: ":")
UNA2	Data element separator	M an1	**M**	*	Used to separate two simple or composite data elements (default value: "+")
UNA3	Decimal mark	M an1	**M**	*	Used to indicate the character used for decimal notation (default value:".")
UNA4	Release character	M an1	**M**	*	Used to restore any service character to its original specification (value: "?").
UNA5	Repetition separator	M an1	**M**	*	Used to indicate the character used for repetition separation (value: " * ").
UNA6	Segment terminator	M an1	**M**	*	Used to indicate the end of segment data (default value: " ' ")

Segment Notes:

This segment is used to inform the receiver of the interchange that a set of service string characters which are different to the default characters are being used.
When using the default set of service characters, the UNA segment need not be sent. If it is sent, it must immediately precede the UNB segment and contain the four service string characters (positions UNA1, UNA2, UNA4 and UNA6) selected by the interchange sender.
Regardless of whether or not all of the service string characters are being changed every data element within this segment must be filled, (i.e., if some default values are being used with user defined ones, both the default and user defined values must be specified).
When expressing the service string characters in the UNA segment, it is not necessary to include any element separators.
The use of the UNA segment is required when using a character set other than level A.
UNA:+.?*'

5. Segments Layout

Segment number: 2

UNB - M 1 - Interchange header

Function:

To identify an interchange.

Notes:
1. S001/0002, shall be '4' to indicate this version of the syntax.
2. The combination of the values carried in data elements S002, S003 and 0020 shall be used to identify uniquely the interchange, for the purpose of acknowledgement.

		EDIFACT	GS1	*	Description
S001	SYNTAX IDENTIFIER	M	**M**		See Part I chapter 5.2.7 and segment notes.
0001	Syntax identifier	M a4	**M**	*	UNOA = UN/ECE level A UNOB = UN/ECE level B UNOC = UN/ECE level C UNOD = UN/ECE level D UNOE = UN/ECE level E UNOF = UN/ECE level F UNOG = UN/ECE level G UNOH = UN/ECE level H UNOI = UN/ECE level I UNOJ = UN/ECE level J UNOK = UN/ECE level K UNOW = UN/ECE level W UNOX = UN/ECE level X UNOY = UN/ECE level Y
0002	Syntax version number	M an1	**M**	*	4 = Version 4
0080	Service code list directory version number	C an..6	**N**		
0133	Character encoding, coded	C an..3	**N**		
S002	INTERCHANGE SENDER	M	**M**		
0004	Interchange sender identification	M an..35	**M**		GLN (n13)
0007	Identification code qualifier	C an..4	**R**	*	14 = GS1
0008	Interchange sender internal identification	C an..35	**O**		
0042	Interchange sender internal sub-identification	C an..35	**N**		
S003	INTERCHANGE RECIPIENT	M	**M**		
0010	Interchange recipient identification	M an..35	**M**		GLN (n13)
0007	Identification code qualifier	C an..4	**R**	*	14 = GS1
0014	Interchange recipient internal identification	C an..35	**O**		
0046	Interchange recipient internal sub-identification	C an..35	**N**		
S004	DATE AND TIME OF PREPARATION	M	**M**		
0017	Date	M n8	**M**		CCYYMMDD
0019	Time	M n4	**M**		HHMM
0020	Interchange control reference	M an..14	**M**		Unique reference identifying the interchange. Created

5. Segments Layout

Segment number: 2

		EDIFACT	GS1	*	Description
					by the interchange sender.
S005	RECIPIENT REFERENCE/ PASSWORD DETAILS	C	**O**		
0022	Recipient reference/password	M an..14	**M**		
0025	Recipient reference/password qualifier	C an2	**O**		
0026	Application reference	C an..14	**O**		Message identification if the interchange contains only one type of message.
0029	Processing priority code	C a1	**O**		A = Highest priority
0031	Acknowledgement request	C n1	**O**		1 = Requested
0032	Interchange agreement identifier	C an..35	**O**	*	EANCOM.....
0035	Test indicator	C n1	**O**		1 = Interchange is a test

Segment Notes:

This segment is used to envelope the interchange, as well as to identify both, the party to whom the interchange is sent and the party who has sent the interchange. The principle of the UNB segment is the same as a physical envelope which covers one or more letters or documents, and which details, both the address where delivery is to take place and the address from where the envelope has come.
S001: The character encoding specified in basic code table of ISO/IEC 646 (7-bit coded character set for information interchange) shall be used for the interchange service string advice (if used) and up to and including the composite data element S001 'Syntax identifier' in the interchange header. The character repertoire used for the characters in an interchange shall be identified from the code value of data element 0001 in S001 'Syntax identifier' in the interchange header. The character repertoire identified does not apply to objects and/or encrypted data.
The default encoding technique for a particular repertoire shall be the encoding technique defined by its associated character set specification.
DE 0001: The recommended (default) character set for use in EANCOM® for international exchanges is character set A (UNOA). Should users wish to use character sets other than A, an agreement on which set to use should be reached on a bilateral basis before communications begin.
DE 0004, 0008, 0010 and 0014: Within EANCOM® the use of the Global Location Number (GLN) is recommended for the identification of the interchange sender and recipient.
DE 0008: Identification (e.g. a division) specified by the sender of the interchange, to be included if agreed, by the recipient in response interchanges, to facilitate internal routing.
DE 0014: The address for routing, provided beforehand by the interchange recipient, is used by the interchange sender to inform the recipient of the internal address, within the latter's systems, to which the interchange should be routed. It is recommended that the GLN be used for this purpose.
DE 0007: Identification (e.g. a division) specified by the recipient of the interchange, to be included if agreed, by the sender in response interchanges, to facilitate internal routing.
DE S004: The date and time specified in this composite should be the date and time at which the interchange sender prepared the interchange. This date and time may not necessarily be the same as the date and time of contained messages.
DE 0020: The interchange control reference number is generated by the interchange sender and is used to identify uniquely each interchange. Should the interchange sender wish to re-use interchange control reference numbers, it is recommended that each number be preserved for at least a period of three months before being re-used. In order to guarantee uniqueness, the interchange control reference number should always be linked to the interchange sender's identification (DE 0004).
DE S005: The use of passwords must first be agreed bilaterally by the parties exchanging the interchange.
DE 0026: This data element is used to identify the application, on the interchange recipient's system, to which the interchange is directed. This data element may only be used if the interchange contains only one type of message, (e.g. only invoices). The reference used in this data element is assigned by the interchange sender.
DE 0031: This data element is used to indicate whether an acknowledgement to the interchange is required. The EANCOM® APERAK or CONTRL message should be used to provide acknowledgement of interchange receipt. In addition, the EANCOM® CONTRL message may be used to indicate when an interchange has been rejected

5. Segments Layout

Segment number: 2

due to syntax errors.
DE 0032: This data element is used to identify any underlying agreements which control the exchange of data. Within EANCOM® , the identity of such agreements must start with the letters 'EANCOM', the remaining characters within the data element being filled according to bilateral agreements.

UNB+UNOC:4+5412345678908:14+8798765432106:14+20020102:1000+12345555+++++EANCOMREF 52'

5. Segments Layout

Segment number: 3

UNH - M 1 - Message header

Function:

To head, identify and specify a message.

Notes:
1. Data element S009/0057 is retained for upward compatibility. The use of S016 and/or S017 is encouraged in preference.
2. The combination of the values carried in data elements 0062 and S009 shall be used to identify uniquely the message within its group (if used) or if not used, within its interchange, for the purpose of acknowledgement.

		EDIFACT	GS1	*	Description
0062	Message reference number	M an..14	**M**		Sequence number of message in the interchange. DE 0062 in the UNT will have the same value. Sender generated.
S009	MESSAGE IDENTIFIER	M	**M**		
0065	Message type	M an..6	**M**	*	CREMUL = Multiple credit advice message
0052	Message version number	M an..3	**M**	*	D = Draft version/UN/EDIFACT Directory
0054	Message release number	M an..3	**M**	*	01B = Release 2001 - B
0051	Controlling agency, coded	M an..3	**M**	*	UN = UN/CEFACT
0057	Association assigned code	C an..6	**R**	*	EAN003 = GS1 version control number (GS1 Permanent Code) Indicates that the message is the EANCOM version 003 of the UNSM Multiple Credit Advice.
0110	Code list directory version number	C an..6	**O**		This data element can be used to identify the codelist agreed by the interchange partners, e.g. EAN001 = EANCOM 2002 S4 codelist released on 01.12.2002 by GS1.
0113	Message type sub-function identification	C an..6	**N**		
0068	Common access reference	C an..35	**N**		
S010	STATUS OF THE TRANSFER	C	**N**		
0070	Sequence of transfers	M n..2			
0073	First and last transfer	C a1			
S016	MESSAGE SUBSET IDENTIFICATION	C	**N**		
0115	Message subset identification	M an..14			
0116	Message subset version number	C an..3			
0118	Message subset release number	C an..3			
0051	Controlling agency, coded	C an..3			
S017	MESSAGE IMPLEMENTATION GUIDELINE IDENTIFICATION	C	**N**		
0121	Message implementation guideline identification	M an..14			
0122	Message implementation guideline version number	C an..3			
0124	Message implementation	C an..3			

5. Segments Layout

Segment number: 3

		EDIFACT	GS1	*	Description
	guideline release number				
0051	Controlling agency, coded	C an..3			
S018	SCENARIO IDENTIFICATION	C	**N**		
0127	Scenario identification	M an..14			
0128	Scenario version number	C an..3			
0130	Scenario release number	C an..3			
0051	Controlling agency, coded	C an..3			

Segment Notes:

This segment is used to head, identify and specify a message.
DE's 0065, 0052, 0054 and 0051: Indicate that the message is a UNSM Multiple Credit Advice message based on the D.01B directory under the control of the United Nations.

Example:

5. Segments Layout

Segment number: 4

BGM - M 1 - Beginning of message

Function:

To indicate the type and function of a message and to transmit the identifying number.

		EDIFACT	GS1	*	Description
C002	DOCUMENT/MESSAGE NAME	C	**R**		
1001	Document name code	C an..3	**R**	*	338 = Items booked to a financial account report 141 = Advising items to be booked to a financial account 342 = Report of transactions for information only Note 1: Code value '338' is used to inform the beneficiary of the fact that the items contained in this message have been booked. Note 2: Code value '141' is used to inform the beneficiary of items which will be booked according to dates provided in the B or C level (depending on national practices). Note 3: Code value '342' is used to inform the beneficiary at an early stage of items that can not be booked as no transfer of funds has taken place yet.
1131	Code list identification code	C an..17	**N**		
3055	Code list responsible agency code	C an..3	**N**		
1000	Document name	C an..35	**N**		
C106	DOCUMENT/MESSAGE IDENTIFICATION	C	**R**		
1004	Document identifier	C an..35	**R**		Multiple credit advice number assigned by the document sender. For global unique identification of documents Global Document Type Identifier (GDTI) is available.
1056	Version identifier	C an..9	**N**		
1060	Revision identifier	C an..6	**N**		
1225	Message function code	C an..3	**R**	*	7 = Duplicate 9 = Original 31 = Copy The message function, coded is a critical data element in this segment. It applies to all data indicated in the message. The following definitions apply for the restricted codes: 7 = Duplicate - A re-transmission involving the same parties, on the specific request of the receiver. 9 = Original - An original transmission of a multiple credit advise. 31 = A copy of a multiple credit advice for a third party for information purposes.
4343	Response type code	C an..3	**N**		

Segment Notes:

This segment is used to indicate the type and function of a message and to transmit the identifying number.

Example:

5. Segments Layout

Segment number: 5

DTM	- C	1 - Date/time/period			
Function: To specify date, and/or time, or period.					
		EDIFACT	GS1	*	Description
C507	DATE/TIME/PERIOD	M	**M**		
2005	Date or time or period function code qualifier	M an..3	**M**	*	137 = Document/message date/time
2380	Date or time or period value	C an..35	**R**		
2379	Date or time or period format code	C an..3	**R**		102 = CCYYMMDD

Segment Notes:

This segment is used to specify the date on which the Multiple Credit Advice message was created.
DE 2005: Identification of the 'Document/message date/time' (code value 137) is mandatory in an EANCOM message.

Example:
DTM+137:20020112:102'

5. Segments Layout

Segment number: 6

BUS	- C	1 - Business function			
Function: To provide information related to the processing and purpose of a financial message.					
		EDIFACT	GS1	*	Description
C521	BUSINESS FUNCTION	C	**N**		
4027	Business function type code qualifier	M an..3			
4025	Business function code	M an..3			
1131	Code list identification code	C an..17			
3055	Code list responsible agency code	C an..3			
4022	Business description	C an..70			
3279	Geographic area code	C an..3	**R**	*	DO = Domestic IN = International YC4 = European (SWIFT Code)
4487	Financial transaction type code	C an..3	**N**		
C551	BANK OPERATION	C	**N**		
4383	Bank operation code	M an..3			
1131	Code list identification code	C an..17			
3055	Code list responsible agency code	C an..3			
4463	Intra-company payment indicator code	C an..3	**N**		

Segment Notes:

This segment is used to indicate whether all of the credits contained in the message are Domestic, European, or International.

Example:
BUS++DO'

5. Segments Layout

Segment number: 7

SG2	- C	5 -	FII
FII	- M	1 -	Financial institution information

Function:

To identify an account and a related financial institution.

		EDIFACT	GS1	*	Description
3035	Party function code qualifier	M an..3	**M**	*	MS = Document/message issuer/sender
C078	ACCOUNT HOLDER IDENTIFICATION	C	**N**		
3194	Account holder identifier	C an..35			
3192	Account holder name	C an..35			
3192	Account holder name	C an..35			
6345	Currency identification code	C an..3			
C088	INSTITUTION IDENTIFICATION	C	**R**		
3433	Institution name code	C an..11	**A**		
1131	Code list identification code	C an..17	**O**		25 = Bank identification
3055	Code list responsible agency code	C an..3	**D**		5 = ISO (International Organization for Standardization)
3434	Institution branch identifier	C an..17	**O**		
1131	Code list identification code	C an..17	**O**		
3055	Code list responsible agency code	C an..3	**D**		
3432	Institution name	C an..70	**O**		
3436	Institution branch location name	C an..70	**O**		
3207	Country name code	C an..3	**O**		ISO 3166 two alpha code

Segment Notes:

This segment is used to identify the financial institution sending the multiple credit advice.
The preferred way to identify a bank and its branch is in machine readable format using data elements 3433 and 3434. When using C088 it is recommended that if data element 3433 is not used that 3432 be used, and that when data element 3434 is not used that data element 3436 be used.

Example:
FII+MS++KREDBEBB:25:5'

5. Segments Layout

Segment number: 8

SG3	- C	3 -	NAD
NAD	- M	1 -	Name and address

Function:

To specify the name/address and their related function, either by C082 only and/or unstructured by C058 or structured by C080 thru 3207.

		EDIFACT	GS1	*	Description
3035	Party function code qualifier	M an..3	**M**	*	MR = Message recipient
C082	PARTY IDENTIFICATION DETAILS	C	**A**		
3039	Party identifier	M an..35	**M**		For identification of parties it is recommended to use GLN - Format n13.
1131	Code list identification code	C an..17	**O**		
3055	Code list responsible agency code	C an..3	**R**	*	9 = GS1
C058	NAME AND ADDRESS	C	**O**		This composite may only be used to fulfill the requirements of directive 2003/58/EC, article 4.
3124	Name and address description	M an..35	**M**		
3124	Name and address description	C an..35	**O**		
3124	Name and address description	C an..35	**O**		
3124	Name and address description	C an..35	**O**		
3124	Name and address description	C an..35	**O**		
C080	PARTY NAME	C	**D**		
3036	Party name	M an..35	**M**		Party name in clear text.
3036	Party name	C an..35	**O**		
3036	Party name	C an..35	**O**		
3036	Party name	C an..35	**O**		
3036	Party name	C an..35	**O**		
3045	Party name format code	C an..3	**O**		
C059	STREET	C	**D**		
3042	Street and number or post office box identifier	M an..35	**M**		Building Name/Number and Street Name
3042	Street and number or post office box identifier	C an..35	**O**		
3042	Street and number or post office box identifier	C an..35	**O**		
3042	Street and number or post office box identifier	C an..35	**O**		
3164	City name	C an..35	**D**		City/Town name, clear text
C819	COUNTRY SUB-ENTITY DETAILS	C	**D**		
3229	Country sub-entity name code	C an..9	**O**		
1131	Code list identification code	C an..17	**O**		
3055	Code list responsible agency code	C an..3	**O**		

5. Segments Layout

Segment number: 8

		EDIFACT	GS1	*	Description
3228	Country sub-entity name	C an..70	**O**		County/State, clear text.
3251	Postal identification code	C an..17	**D**		Postal code
3207	Country name code	C an..3	**D**		ISO 3166 two alpha code

Segment Notes:

This segment is used to identify the recipient of the multiple credit advice message.

Example:
NAD+MR+5422331123459::9'

Dependency Notes:
The following composites and data elements are only used when a coded name and address can not be used.
The affected composites and data elements are as follows;
C080 - C059 - 3164 - C819 - 3251 - 3207

5. Segments Layout

Segment number: 9

SG4	- M	9999	-	LIN-DTM-BUS-MOA-SG5-SG6-SG7-SG10
LIN	- M	1	-	Line item

Function:

To identify a line item and configuration.

		EDIFACT	GS1	*	Description
1082	Line item identifier	C an..6	**R**		Application generated number of the count of the lines in the multiple credit advice.
1229	Action request/notification description code	C an..3	**N**		
C212	ITEM NUMBER IDENTIFICATION	C	**N**		
7140	Item identifier	C an..35			
7143	Item type identification code	C an..3			
1131	Code list identification code	C an..17			
3055	Code list responsible agency code	C an..3			
C829	SUB-LINE INFORMATION	C	**N**		
5495	Sub-line indicator code	C an..3			
1082	Line item identifier	C an..6			
1222	Configuration level number	C n..2	**N**		
7083	Configuration operation code	C an..3	**N**		

Segment Notes:

This segment is used to identify a line within the multiple credit advice by means of a unique line number.
If Global Trade Item Numbers are available it is mandatory to use GTIN within the LIN segment.

Note on DE 1082:
Numbering rule: In Part I, section 4.10 there is the recommendation “Within EANCOM® it is recommended that the line numbers used in the first occurrence of data element 1082 in the LIN segment be sequential, starting at 1 for each new message.”

LIN+1'

5. Segments Layout

Segment number: 10

SG4	- M	9999	-	LIN-DTM-BUS-MOA-SG5-SG6-SG7-SG10
DTM	- C	2	-	Date/time/period

Function:

To specify date, and/or time, or period.

		EDIFACT	GS1	*	Description
C507	DATE/TIME/PERIOD	M	**M**		
2005	Date or time or period function code qualifier	M an..3	**M**	*	193 = Execution date 202 = Posting date 209 = Value date
2380	Date or time or period value	C an..35	**R**		
2379	Date or time or period format code	C an..3	**R**		102 = CCYYMMDD

Segment Notes:

This segment is used to specify the posting and value dates for the credit instruction.

Example:
DTM+209:20020112:102'

5. Segments Layout

Segment number: 11

SG4	- M	9999	-	LIN-DTM-BUS-MOA-SG5-SG6-SG7-SG10
BUS	- C	1	-	Business function

Function:

To provide information related to the processing and purpose of a financial message.

		EDIFACT	GS1	*	Description
C521	BUSINESS FUNCTION	C	**O**		
4027	Business function type code qualifier	M an..3	**M**	*	1 = Underlying business function
4025	Business function code	M an..3	**M**		COM = Commission COS = Costs GDS = Purchase and sale of goods INT = Interest NET = Netting PEN = Pension TAX = Tax payment
1131	Code list identification code	C an..17	**O**		
3055	Code list responsible agency code	C an..3	**D**		9 = GS1
4022	Business description	C an..70	**O**		
3279	Geographic area code	C an..3	**R**	*	DO = Domestic IN = International YC4 = European (SWIFT Code)
4487	Financial transaction type code	C an..3	**O**	*	1 = Clean payment 4 = Documentary payment 5 = Irrevocable documentary credit 6 = Revocable documentary credit 7 = Irrevocable and transferable documentary credit 8 = Revocable and transferable documentary credit
C551	BANK OPERATION	C	**O**		
4383	Bank operation code	M an..3	**M**		CLR = Clearing INT = Interest TRF = Transfer
1131	Code list identification code	C an..17	**O**		
3055	Code list responsible agency code	C an..3	**D**		
4463	Intra-company payment indicator code	C an..3	**O**	*	1 = Intra-company payment

Segment Notes:

This segment is used to identify the characteristics of the credit instructions detailed in level C of the message.

Example:
BUS+1:INT+DO'

5. Segments Layout

Segment number: 12

SG4	- M	9999 -	LIN-DTM-BUS-MOA-SG5-SG6-SG7-SG10
MOA	- M	2 -	Monetary amount

Function:

To specify a monetary amount.

		EDIFACT	GS1	*	Description
C516	MONETARY AMOUNT	M	**M**		
5025	Monetary amount type code qualifier	M an..3	**M**	*	60 = Final (posted) amount 349 = Pending amount to be booked on account (SWIFT Code) XB5 = Information amount (SWIFT Code)
5004	Monetary amount	C n..35	**R**		
6345	Currency identification code	C an..3	**A**		ISO 4217 three alpha code
6343	Currency type code qualifier	C an..3	**N**		
4405	Status description code	C an..3	**O**		4 = Final 5 = Subject to final payment

Segment Notes:

This segment is used to specify the total credit amount, and/or information amount, and if necessary the relevant currency.

Example:
MOA+349:50000:EUR'

5. Segments Layout

Segment number: 13

SG4	- M	9999	-	LIN-DTM-BUS-MOA-SG5-SG6-SG7-SG10
SG5	- M	3	-	RFF-DTM
RFF	- M	1	-	Reference

Function:

To specify a reference.

		EDIFACT	GS1	*	Description
C506	REFERENCE	M	**M**		
1153	Reference code qualifier	M an..3	**M**		ACK = Bank reference The code value 'ACK' is generated by the beneficiary's bank to identify the credit entry.
1154	Reference identifier	C an..70	**R**		
1156	Document line identifier	C an..6	**N**		
4000	Reference version identifier	C an..35	**N**		
1060	Revision identifier	C an..6	**N**		

Segment Notes:

This segment is used to provide reference numbers related to the payments contained in the message.

Example:
RFF+ACK:77212'

5. Segments Layout

Segment number: 14

SG4	- M	9999	-	LIN-DTM-BUS-MOA-SG5-SG6-SG7-SG10
SG5	- M	3	-	RFF-DTM
DTM	- C	1	-	Date/time/period

Function:

To specify date, and/or time, or period.

		EDIFACT	GS1	*	Description
C507	DATE/TIME/PERIOD	M	**M**		
2005	Date or time or period function code qualifier	M an..3	**M**	*	171 = Reference date/time
2380	Date or time or period value	C an..35	**R**		
2379	Date or time or period format code	C an..3	**R**	*	102 = CCYYMMDD

Segment Notes:

This segment contains data relevant to the related references.

Example:
DTM+171:20020112:102'

5. Segments Layout

Segment number: 15

SG4	- M	9999 -	LIN-DTM-BUS-MOA-SG5-SG6-SG7-SG10
SG6	- M	1 -	FII
FII	- M	1 -	Financial institution information

Function:

To identify an account and a related financial institution.

		EDIFACT	GS1	*	Description
3035	Party function code qualifier	M an..3	**M**	*	BF = Beneficiary's bank
C078	ACCOUNT HOLDER IDENTIFICATION	C	**R**		
3194	Account holder identifier	C an..35	**R**		Account number being credited.
3192	Account holder name	C an..35	**O**		
3192	Account holder name	C an..35	**O**		
6345	Currency identification code	C an..3	**O**		ISO 4217 three alpha
C088	INSTITUTION IDENTIFICATION	C	**D**		In some countries it is possible to identify within the account number the institution name and branch. Where this is possible the composite C088 will not be required. For international transactions it is recommended that the need for composite C088 should be checked before sending the message.
3433	Institution name code	C an..11	**O**		
1131	Code list identification code	C an..17	**O**		25 = Bank identification
3055	Code list responsible agency code	C an..3	**D**		5 = ISO (International Organization for Standardization)
3434	Institution branch identifier	C an..17	**O**		
1131	Code list identification code	C an..17	**O**		
3055	Code list responsible agency code	C an..3	**D**		
3432	Institution name	C an..70	**O**		
3436	Institution branch location name	C an..70	**O**		
3207	Country name code	C an..3	**O**		ISO 3166 two alpha code

Segment Notes:

This segment is used to identify the financial institution and account information related to the beneficiary for the credit instruction.
The preferred way to identify a bank and its branch is in machine readable format using data elements 3433 and 3434. When using C088 it is recommended that if data element 3433 is not used that 3432 be used, and that when data element 3434 is not used that data element 3436 be used.

Example:
FII+BF+994-3277711:N GEISS+KREDBEBB:25:5'

5. Segments Layout

Segment number: 16

SG4	- M	9999	-	LIN-DTM-BUS-MOA-SG5-SG6-SG7-SG10
SG7	- C	5	-	FCA-MOA-SG8
FCA	- M	1	-	Financial charges allocation

Function:

Description of allocation of charges.

		EDIFACT	GS1	*	Description
4471	Settlement means code	M an..3	**M**	*	13 = All charges borne by payee 14 = Each pay own cost 15 = All charges borne by payor
C878	CHARGE/ALLOWANCE ACCOUNT	C	**O**		
3434	Institution branch identifier	M an..17	**M**		
1131	Code list identification code	C an..17	**O**		25 = Bank identification 154 = Bank branch sorting identification
3055	Code list responsible agency code	C an..3	**D**		5 = ISO (International Organization for Standardization)
3194	Account holder identifier	C an..35	**O**		If this data element is not used the primary account (i.e. the ordered bank account) specified in the FII segment should be used. The account number quotes here must always be maintained by the bank issuing the message.
6345	Currency identification code	C an..3	**O**		ISO 4217 three alpha

Segment Notes:

This segment is used to identify the method for allocating charges and allowances, to a Beneficiary or Payee account. It may also identify an account where charges/allowances should be directed when different to the primary account.

Example:
FCA+15+DRESDEFF666:25:5'

5. Segments Layout

Segment number: 17

SG4	- M	9999	-	LIN-DTM-BUS-MOA-SG5-SG6-SG7-SG10
SG7	- C	5	-	FCA-MOA-SG8
MOA	- C	2	-	Monetary amount

Function:

To specify a monetary amount.

		EDIFACT	GS1	*	Description
C516	MONETARY AMOUNT	M	**M**		
5025	Monetary amount type code qualifier	M an..3	**M**	*	23 = Charge amount 25 = Charge/allowance basis 204 = Allowance amount
5004	Monetary amount	C n..35	**R**		
6345	Currency identification code	C an..3	**O**		ISO 4217 three alpha code
6343	Currency type code qualifier	C an..3	**N**		
4405	Status description code	C an..3	**N**		

Segment Notes:

This segment is used to specify the monetary value of all allowances and charges related to the credit transaction and if necessary the basis for the allowances and charges.

Example:
MOA+25:50000'

5. Segments Layout

Segment number: 18

SG4	- M	9999 -	LIN-DTM-BUS-MOA-SG5-SG6-SG7-SG10
SG7	- C	5 -	FCA-MOA-SG8
SG8	- C	6 -	ALC-PCD-MOA-CUX-DTM-SG9
ALC	- M	1 -	Allowance or charge

Function:

To identify allowance or charge details.

		EDIFACT	GS1	*	Description
5463	Allowance or charge code qualifier	M an..3	**M**		A = Allowance C = Charge
C552	ALLOWANCE/CHARGE INFORMATION	C	**O**		
1230	Allowance or charge identifier	C an..35	**D**		If code '69' is used in DE 5189, the agreement number must be specified in DE 1230.
5189	Allowance or charge identification code	C an..3	**O**		1 = Handling commission 13 = Domicilation commission 30 = Bank charges 69 = Charge for a customer specific finish
4471	Settlement means code	C an..3	**N**		
1227	Calculation sequence code	C an..3	**D**		If the allowance or charge is not to be applied against a fixed price then the calculation sequence indicator must be included.
C214	SPECIAL SERVICES IDENTIFICATION	C	**N**		
7161	Special service description code	C an..3			
1131	Code list identification code	C an..17			
3055	Code list responsible agency code	C an..3			
7160	Special service description	C an..35			
7160	Special service description	C an..35			

Segment Notes:

This segment is used to provide a breakdown of all allowances and charges associated with the transaction.

Example:
ALC+C+:1'

5. Segments Layout

Segment number: 19

SG4	- M	9999	-	LIN-DTM-BUS-MOA-SG5-SG6-SG7-SG10
SG7	- C	5	-	FCA-MOA-SG8
SG8	- C	6	-	ALC-PCD-MOA-CUX-DTM-SG9
PCD	- C	1	-	Percentage details

Function:

To specify percentage information.

		EDIFACT	GS1	*	Description
C501	PERCENTAGE DETAILS	M	**M**		
5245	Percentage type code qualifier	M an..3	**M**		3 = Allowance or charge
5482	Percentage	C n..10	**R**		
5249	Percentage basis identification code	C an..3	**O**		
1131	Code list identification code	C an..17	**O**		
3055	Code list responsible agency code	C an..3	**D**		
4405	Status description code	C an..3	**N**		

Segment Notes:

This segment is used to specify the percentage to be used when calculating the allowance or charge.

Example:
PCD+3:4.23'

5. Segments Layout

Segment number: 20

SG4	- M	9999	-	LIN-DTM-BUS-MOA-SG5-SG6-SG7-SG10
SG7	- C	5	-	FCA-MOA-SG8
SG8	- C	6	-	ALC-PCD-MOA-CUX-DTM-SG9
MOA	- C	2	-	Monetary amount

Function:

To specify a monetary amount.

		EDIFACT	GS1	*	Description
C516	MONETARY AMOUNT	M	**M**		
5025	Monetary amount type code qualifier	M an..3	**M**		8 = Allowance or charge amount 25 = Charge/allowance basis
5004	Monetary amount	C n..35	**R**		
6345	Currency identification code	C an..3	**O**		
6343	Currency type code qualifier	C an..3	**N**		
4405	Status description code	C an..3	**N**		

Segment Notes:

This segment is used to specify the amount and if necessary the basis amount to be used when calculating the allowances or charges.

Example:
MOA+8:1400'

5. Segments Layout

Segment number: 21

SG4	- M	9999 -	LIN-DTM-BUS-MOA-SG5-SG6-SG7-SG10
SG7	- C	5 -	FCA-MOA-SG8
SG8	- C	6 -	ALC-PCD-MOA-CUX-DTM-SG9
CUX	- C	1 -	Currencies

Function:

To specify currencies used in the transaction and relevant details for the rate of exchange.

		EDIFACT	GS1	*	Description
C504	CURRENCY DETAILS	C	**R**		
6347	Currency usage code qualifier	M an..3	**M**	*	2 = Reference currency The second occurrence of this composite is only used if a target currency is being specified.
6345	Currency identification code	C an..3	**R**		ISO 4217 three alpha
6343	Currency type code qualifier	C an..3	**R**	*	11 = Payment currency
6348	Currency rate value	C n..4	**D**		
C504	CURRENCY DETAILS	C	**D**		
6347	Currency usage code qualifier	M an..3	**M**	*	3 = Target currency
6345	Currency identification code	C an..3	**R**		ISO 4217 three alpha
6343	Currency type code qualifier	C an..3	**R**	*	4 = Invoicing currency 17 = Charge calculation currency
6348	Currency rate value	C n..4	**D**		These data elements are only used when a rate of exchange is provided in data element 5402. When a rate of exchange is provided then at least one currency rate base must be specified.
5402	Currency exchange rate	C n..12	**D**		The rate of exchange which applies to the currency. The rate of exchange is only used if a target currency has been identified in the second occurrence of C504.
6341	Exchange rate currency market identifier	C an..3	**N**		

Segment Notes:

This segment is used to provide the exchange rate related to the allowances or charges.
The CUX segment is mandatory for international exchanges.
When specifying Reference and Target Currencies for international trade, one occurrence of CUX is all that is required. The reference currency is identified in the first occurrence of composite C504, with the target currency specified in the second occurrence of C504. The rate of exchange between the two is detailed in DE 5402.
The general rule for calculating rate of exchange is as follows;
Reference Currency multiplied by Rate = Target Currency.

Example:
CUX+2:EUR:11+3:USD:4+0.90243'
For an international transaction, the payment currency is identified as being Euro with the Invoicing currency as US Dollar. The rate of exchange between the two is 0.90243 Euro to 1 US Dollar.

5. Segments Layout

Segment number: 22

SG4	- M	9999	-	LIN-DTM-BUS-MOA-SG5-SG6-SG7-SG10
SG7	- C	5	-	FCA-MOA-SG8
SG8	- C	6	-	ALC-PCD-MOA-CUX-DTM-SG9
DTM	- C	1	-	Date/time/period

Function:

To specify date, and/or time, or period.

		EDIFACT	GS1	*	Description
C507	DATE/TIME/PERIOD	M	**M**		
2005	Date or time or period function code qualifier	M an..3	**M**	*	134 = Rate of exchange date/time 211 = 360/30 212 = 360/28-31 213 = 365-6/30 214 = 365-6/28-31 215 = 365/28-31 216 = 365/30 273 = Validity period Code 211 - Calculation is based on year of 360 days, month of 30 days. Code 212 - Calculation is based on year of 360 days, month of 28-31 days. Code 213 - Calculation is based on year of 365-6 days, month of 30 days. Code 214 - Calculation is based on year of 365-6 days, month of 28-31 days. Code 215 - Calculation is based on year of 365 days, month of 28-31 days. Code 216 - Calculation is based on year of 365 days, month of 30 days.
2380	Date or time or period value	C an..35	**R**		
2379	Date or time or period format code	C an..3	**R**		102 = CCYYMMDD 107 = DDD 718 = CCYYMMDD-CCYYMMDD

Segment Notes:

This segment is used to specify the date on which a rate of exchange was quoted.

Example:
DTM+134:20020601:102'

5. Segments Layout

Segment number: 23

SG4	- M	9999 -	LIN-DTM-BUS-MOA-SG5-SG6-SG7-SG10
SG7	- C	5 -	FCA-MOA-SG8
SG8	- C	6 -	ALC-PCD-MOA-CUX-DTM-SG9
SG9	- C	5 -	TAX-MOA
TAX	- M	1 -	Duty/tax/fee details

Function:

To specify relevant duty/tax/fee information.

		EDIFACT	GS1	*	Description
5283	Duty or tax or fee function code qualifier	M an..3	**M**		5 = Customs duty 6 = Fee 7 = Tax
C241	DUTY/TAX/FEE TYPE	C	**D**		
5153	Duty or tax or fee type name code	C an..3	**O**		GST = Goods and services tax OTH = Other taxes VAT = Value added tax
1131	Code list identification code	C an..17	**O**		
3055	Code list responsible agency code	C an..3	**D**		
5152	Duty or tax or fee type name	C an..35	**O**		
C533	DUTY/TAX/FEE ACCOUNT DETAIL	C	**O**		
5289	Duty or tax or fee account code	M an..6	**M**		
1131	Code list identification code	C an..17	**O**		
3055	Code list responsible agency code	C an..3	**D**		
5286	Duty or tax or fee assessment basis value	C an..15	**O**		
C243	DUTY/TAX/FEE DETAIL	C	**A**		
5279	Duty or tax or fee rate code	C an..7	**O**		
1131	Code list identification code	C an..17	**O**		
3055	Code list responsible agency code	C an..3	**D**		
5278	Duty or tax or fee rate	C an..17	**R**		The actual rate of tax/duty.
5273	Duty or tax or fee rate basis code	C an..12	**O**		
1131	Code list identification code	C an..17	**O**		
3055	Code list responsible agency code	C an..3	**D**		
5305	Duty or tax or fee category code	C an..3	**D**		A = Mixed tax rate E = Exempt from tax S = Standard rate
3446	Party tax identifier	C an..20	**O**		
1227	Calculation sequence code	C an..3	**N**		

Segment Notes:

5. Segments Layout

Segment number: 23

This segment is used to specify any taxes associated with the allowances and charges.

Example:
TAX+7+VAT+++:::18.5+S'

Dependency Notes:
DE C241 and 5305: Tax types and categories will vary from country to country. They should be defined by national guidelines.

5. Segments Layout

Segment number: 24

SG4	- M	9999 -	LIN-DTM-BUS-MOA-SG5-SG6-SG7-SG10
SG7	- C	5 -	FCA-MOA-SG8
SG8	- C	6 -	ALC-PCD-MOA-CUX-DTM-SG9
SG9	- C	5 -	TAX-MOA
MOA	- C	2 -	Monetary amount

Function:

To specify a monetary amount.

		EDIFACT	GS1	*	Description
C516	MONETARY AMOUNT	M	**M**		
5025	Monetary amount type code qualifier	M an..3	**M**		55 = Duty amount 56 = Duty/tax/fee basis amount 161 = Duty, tax or fee amount
5004	Monetary amount	C n..35	**R**		
6345	Currency identification code	C an..3	**O**		
6343	Currency type code qualifier	C an..3	**N**		
4405	Status description code	C an..3	**N**		

Segment Notes:

This segment is used to indicate the tax or duty amount for the tax rates specified in the previous TAX segment.

Example:
MOA+55:6500'

5. Segments Layout

Segment number: 25

SG4	- M	9999 -	LIN-DTM-BUS-MOA-SG5-SG6-SG7-SG10
SG10	- M	99999 -	SEQ-DTM-BUS-FII-SG11-SG12-SG13-SG14-SG15-SG16-SG17-SG20
SEQ	- M	1 -	Sequence details

Function:

To provide details relating to the sequence.

		EDIFACT	GS1	*	Description
1229	Action request/notification description code	C an..3	**N**		
C286	SEQUENCE INFORMATION	C	**R**		
1050	Sequence position identifier	M an..10	**M**		
1159	Sequence identifier source code	C an..3	**N**		
1131	Code list identification code	C an..17	**N**		
3055	Code list responsible agency code	C an..3	**N**		

Segment Notes:

This segment is used to identify the start of the specification of individual transactions (level C) by means of a sequence number within the current line number. The sequence number should be reset to one for each occurrence of a new line number (in LIN segment).

Example:
SEQ++1'

5. Segments Layout

Segment number: 26

SG4	- M	9999 -	LIN-DTM-BUS-MOA-SG5-SG6-SG7-SG10
SG10	- M	99999 -	SEQ-DTM-BUS-FII-SG11-SG12-SG13-SG14-SG15-SG16-SG17-SG20
DTM	- C	3 -	Date/time/period

Function:

To specify date, and/or time, or period.

		EDIFACT	GS1	*	Description
C507	DATE/TIME/PERIOD	M	**M**		
2005	Date or time or period function code qualifier	M an..3	**M**	*	193 = Execution date 202 = Posting date 209 = Value date 417 = Previous booking date/time Code value '193' is taken from the original payment order and reported back by the bank to the beneficiary.
2380	Date or time or period value	C an..35	**R**		
2379	Date or time or period format code	C an..3	**R**		102 = CCYYMMDD

Segment Notes:

This segment is used to specify dates related to references provided in the previous segment.

Example:
DTM+202:20020115:102'

5. Segments Layout

Segment number: 27

SG4	- M	9999 -	LIN-DTM-BUS-MOA-SG5-SG6-SG7-SG10
SG10	- M	99999 -	SEQ-DTM-BUS-FII-SG11-SG12-SG13-SG14-SG15-SG16-SG17-SG20
BUS	- C	1 -	Business function

Function:

To provide information related to the processing and purpose of a financial message.

		EDIFACT	GS1	*	Description
C521	BUSINESS FUNCTION	C	**O**		The values reported in this composite data element are taken by the bank from the original payment order and reported back to the beneficiary.
4027	Business function type code qualifier	M an..3	**M**	*	1 = Underlying business function
4025	Business function code	M an..3	**M**		COM = Commission COS = Costs GDS = Purchase and sale of goods INT = Interest NET = Netting TAX = Tax payment
1131	Code list identification code	C an..17	**O**		
3055	Code list responsible agency code	C an..3	**D**		9 = GS1
4022	Business description	C an..70	**O**		
3279	Geographic area code	C an..3	**R**	*	DO = Domestic IN = International YC4 = European (SWIFT Code)
4487	Financial transaction type code	C an..3	**O**	*	1 = Clean payment 4 = Documentary payment 5 = Irrevocable documentary credit 6 = Revocable documentary credit 7 = Irrevocable and transferable documentary credit 8 = Revocable and transferable documentary credit
C551	BANK OPERATION	C	**O**		
4383	Bank operation code	M an..3	**M**		CLR = Clearing INT = Interest TRF = Transfer
1131	Code list identification code	C an..17	**O**		
3055	Code list responsible agency code	C an..3	**D**		
4463	Intra-company payment indicator code	C an..3	**O**	*	1 = Intra-company payment

Segment Notes:

This segment is used to identify the characteristics of the individual credit transactions.

Example:
BUS+1:INT+DO'

5. Segments Layout

Segment number: 28

SG4	- M	9999 -	LIN-DTM-BUS-MOA-SG5-SG6-SG7-SG10
SG10	- M	99999 -	SEQ-DTM-BUS-FII-SG11-SG12-SG13-SG14-SG15-SG16-SG17-SG20
FII	- M	2 -	Financial institution information

Function:

To identify an account and a related financial institution.

		EDIFACT	GS1	*	Description
3035	Party function code qualifier	M an..3	**M**	*	BF = Beneficiary's bank I1 = Intermediary bank 1 OR = Ordered bank
C078	ACCOUNT HOLDER IDENTIFICATION	C	**R**		
3194	Account holder identifier	C an..35	**R**		Beneficiary account number.
3192	Account holder name	C an..35	**O**		
3192	Account holder name	C an..35	**O**		
6345	Currency identification code	C an..3	**O**		ISO 4217 three alpha
C088	INSTITUTION IDENTIFICATION	C	**D**		In some countries it is possible to identify within the account number the institution name and branch. Where this is possible the composite C088 will not be required. For international transactions it is recommended that the need for composite C088 should be checked before sending the message.
3433	Institution name code	C an..11	**O**		
1131	Code list identification code	C an..17	**O**		25 = Bank identification
3055	Code list responsible agency code	C an..3	**D**		5 = ISO (International Organization for Standardization)
3434	Institution branch identifier	C an..17	**O**		
1131	Code list identification code	C an..17	**O**		
3055	Code list responsible agency code	C an..3	**D**		
3432	Institution name	C an..70	**O**		
3436	Institution branch location name	C an..70	**O**		
3207	Country name code	C an..3	**O**		ISO 3166 two alpha code

Segment Notes:

This segment is used to identify the financial institution and account number(s) related to the current transaction. The preferred way to identify a bank and its branch is in machine readable format using data elements 3433 and 3434. When using C088 it is recommended that if data element 3433 is not used that 3432 be used, and that when data element 3434 is not used that data element 3436 be used.

Example:
FII+BF+994-3277711:N GEISS+KREDBEBB:25:5'

5. Segments Layout

Segment number: 29

SG4	- M	9999 -	LIN-DTM-BUS-MOA-SG5-SG6-SG7-SG10
SG10	- M	99999 -	SEQ-DTM-BUS-FII-SG11-SG12-SG13-SG14-SG15-SG16-SG17-SG20
SG11	- C	5 -	RFF-DTM
RFF	- M	1 -	Reference

Function:

To specify a reference.

		EDIFACT	GS1	*	Description
C506	REFERENCE	M	**M**		
1153	Reference code qualifier	M an..3	**M**		AIK = Bank's individual transaction reference number RA = Remittance advice number CR = Customer reference number Note 1: The code value 'AIK' is used by the sending bank to uniquely identify each individual credit entry. Note 2: When the code value 'RA' is used in this segment it will always relate to an external remittance advice which has been issued by the ordering party and communicated directly between two trading partners. It is recommended that only one remittance advice be specified per level C. Note 3: By use of qualifier CR the reference is taken from PAYMUL.
1154	Reference identifier	C an..70	**R**		
1156	Document line identifier	C an..6	**N**		
4000	Reference version identifier	C an..35	**N**		
1060	Revision identifier	C an..6	**N**		

Segment Notes:

This segment is used to identify any references related to the credit entry.

Example:
RFF+AIK:855144'

5. Segments Layout

Segment number: 30

SG4	- M	9999	-	LIN-DTM-BUS-MOA-SG5-SG6-SG7-SG10
SG10	- M	99999	-	SEQ-DTM-BUS-FII-SG11-SG12-SG13-SG14-SG15-SG16-SG17-SG20
SG11	- C	5	-	RFF-DTM
DTM	- C	1	-	Date/time/period

Function:

To specify date, and/or time, or period.

		EDIFACT	GS1	*	Description
C507	DATE/TIME/PERIOD	M	**M**		
2005	Date or time or period function code qualifier	M an..3	**M**	*	171 = Reference date/time
2380	Date or time or period value	C an..35	**R**		
2379	Date or time or period format code	C an..3	**R**		102 = CCYYMMDD

Segment Notes:

This segment is used to specify dates relevant to the beneficiary's side of the credit entry.

Example:
DTM+171:20020115:102'

5. Segments Layout

Segment number: 31

SG4	- M	9999 -	LIN-DTM-BUS-MOA-SG5-SG6-SG7-SG10
SG10	- M	99999 -	SEQ-DTM-BUS-FII-SG11-SG12-SG13-SG14-SG15-SG16-SG17-SG20
SG12	- C	1 -	PAI
PAI	- M	1 -	Payment instructions

Function:

To specify the instructions for payment.

		EDIFACT	GS1	*	Description
C534	PAYMENT INSTRUCTION DETAILS	M	**M**		
4439	Payment conditions code	C an..3	**N**		
4431	Payment guarantee means code	C an..3	**N**		
4461	Payment means code	C an..3	**O**		
1131	Code list identification code	C an..17	**O**		
3055	Code list responsible agency code	C an..3	**D**		
4435	Payment channel code	C an..3	**R**		2 = Air mail 4 = Telex 5 = S.W.I.F.T. 8 = Fedwire 9 = Personal (face-to-face) 10 = Registered air mail

Segment Notes:

This segment is used to specify the payment channel which has been used. It is recommended that this segment is only used if no previous agreements are in place between trading partners.

Example:
PAI+:::::2'

5. Segments Layout

Segment number: 32

SG4	- M	9999 -	LIN-DTM-BUS-MOA-SG5-SG6-SG7-SG10
SG10	- M	99999 -	SEQ-DTM-BUS-FII-SG11-SG12-SG13-SG14-SG15-SG16-SG17-SG20
SG13	- M	4 -	MOA-CUX-DTM-RFF
MOA	- M	1 -	Monetary amount

Function:

To specify a monetary amount.

		EDIFACT	GS1	*	Description
C516	MONETARY AMOUNT	M	**M**		
5025	Monetary amount type code qualifier	M an..3	**M**	*	36 = Converted amount 60 = Final (posted) amount 98 = Original amount 119 = Received amount 349 = Pending amount to be booked on account (SWIFT Code) XB5 = Information amount (SWIFT Code)
5004	Monetary amount	C n..35	**R**		
6345	Currency identification code	C an..3	**O**		ISO 4217 three alpha code
6343	Currency type code qualifier	C an..3	**N**		
4405	Status description code	C an..3	**O**		4 = Final 5 = Subject to final payment

Segment Notes:

This segment is used to specify the booked amount which will be or has been credited to the beneficiary's account. If necessary it may also specify an information amount related to the credit transaction.

Example:
MOA+349:8000'

5. Segments Layout

Segment number: 33

SG4	- M	9999	-	LIN-DTM-BUS-MOA-SG5-SG6-SG7-SG10
SG10	- M	99999	-	SEQ-DTM-BUS-FII-SG11-SG12-SG13-SG14-SG15-SG16-SG17-SG20
SG13	- M	4	-	MOA-CUX-DTM-RFF
CUX	- C	1	-	Currencies

Function:

To specify currencies used in the transaction and relevant details for the rate of exchange.

		EDIFACT	GS1	*	Description
C504	CURRENCY DETAILS	C	**R**		
6347	Currency usage code qualifier	M an..3	**M**	*	2 = Reference currency
6345	Currency identification code	C an..3	**R**		ISO 4217 three alpha
6343	Currency type code qualifier	C an..3	**N**		
6348	Currency rate value	C n..4	**D**		
C504	CURRENCY DETAILS	C	**D**		
6347	Currency usage code qualifier	M an..3	**M**	*	3 = Target currency
6345	Currency identification code	C an..3	**R**		ISO 4217 three alpha
6343	Currency type code qualifier	C an..3	**N**		
6348	Currency rate value	C n..4	**D**		
5402	Currency exchange rate	C n..12	**D**		
6341	Exchange rate currency market identifier	C an..3	**N**		

Segment Notes:

This segment is used to identify the source currency and the target currency of the transaction.

Example:
CUX+2:EUR+3:USD:0.90243'

5. Segments Layout

Segment number: 34

SG4	- M	9999	-	LIN-DTM-BUS-MOA-SG5-SG6-SG7-SG10
SG10	- M	99999	-	SEQ-DTM-BUS-FII-SG11-SG12-SG13-SG14-SG15-SG16-SG17-SG20
SG13	- M	4	-	MOA-CUX-DTM-RFF
DTM	- C	2	-	Date/time/period

Function:

To specify date, and/or time, or period.

		EDIFACT	GS1	*	Description
C507	DATE/TIME/PERIOD	M	**M**		
2005	Date or time or period function code qualifier	M an..3	**M**	*	134 = Rate of exchange date/time 171 = Reference date/time
2380	Date or time or period value	C an..35	**R**		
2379	Date or time or period format code	C an..3	**R**		102 = CCYYMMDD

Segment Notes:

This segment is used to specify dates relevant to the preceding monetary amount or the following reference.

Example:
DTM+171:20020115:102'

5. Segments Layout

Segment number: 35

SG4	- M	9999 -	LIN-DTM-BUS-MOA-SG5-SG6-SG7-SG10
SG10	- M	99999 -	SEQ-DTM-BUS-FII-SG11-SG12-SG13-SG14-SG15-SG16-SG17-SG20
SG13	- M	4 -	MOA-CUX-DTM-RFF
RFF	- C	1 -	Reference

Function:

To specify a reference.

		EDIFACT	GS1	*	Description
C506	REFERENCE	M	**M**		
1153	Reference code qualifier	M an..3	**M**	*	ACX = Banker's acceptance ADB = Matured certificate of deposit ADC = Loan FX = Foreign exchange contract number
1154	Reference identifier	C an..70	**R**		
1156	Document line identifier	C an..6	**N**		
4000	Reference version identifier	C an..35	**N**		
1060	Revision identifier	C an..6	**N**		

Segment Notes:

This segment is used to identify a transaction negotiated between the beneficiary (or payee) and the beneficiary's bank.

Example:
RFF+FX:855144'

5. Segments Layout

Segment number: 36

SG4	- M	9999 -	LIN-DTM-BUS-MOA-SG5-SG6-SG7-SG10
SG10	- M	99999 -	SEQ-DTM-BUS-FII-SG11-SG12-SG13-SG14-SG15-SG16-SG17-SG20
SG14	- C	3 -	NAD-CTA-COM
NAD	- M	1 -	Name and address

Function:

To specify the name/address and their related function, either by C082 only and/or unstructured by C058 or structured by C080 thru 3207.

		EDIFACT	GS1	*	Description
3035	Party function code qualifier	M an..3	**M**		OY = Ordering customer P1 = Contact party 1 PL = Payor
C082	PARTY IDENTIFICATION DETAILS	C	**A**		
3039	Party identifier	M an..35	**M**		For identification of parties it is recommended to use GLN - Format n13.
1131	Code list identification code	C an..17	**O**		
3055	Code list responsible agency code	C an..3	**R**	*	9 = GS1
C058	NAME AND ADDRESS	C	**O**		This composite may only be used to fulfill the requirements of directive 2003/58/EC, article 4.
3124	Name and address description	M an..35	**M**		
3124	Name and address description	C an..35	**O**		
3124	Name and address description	C an..35	**O**		
3124	Name and address description	C an..35	**O**		
3124	Name and address description	C an..35	**O**		
C080	PARTY NAME	C	**D**		
3036	Party name	M an..35	**M**		Party name in clear text.
3036	Party name	C an..35	**O**		
3036	Party name	C an..35	**O**		
3036	Party name	C an..35	**O**		
3036	Party name	C an..35	**O**		
3045	Party name format code	C an..3	**O**		
C059	STREET	C	**D**		
3042	Street and number or post office box identifier	M an..35	**M**		Building Name/Number and Street Name
3042	Street and number or post office box identifier	C an..35	**O**		
3042	Street and number or post office box identifier	C an..35	**O**		
3042	Street and number or post office box identifier	C an..35	**O**		
3164	City name	C an..35	**D**		City/Town name, clear text
C819	COUNTRY SUB-ENTITY DETAILS	C	**D**		
3229	Country sub-entity name code	C an..9	**O**		

5. Segments Layout

Segment number: 36

		EDIFACT	GS1	*	Description
1131	Code list identification code	C an..17	**O**		
3055	Code list responsible agency code	C an..3	**O**		
3228	Country sub-entity name	C an..70	**O**		County/State, clear text.
3251	Postal identification code	C an..17	**D**		Postal code
3207	Country name code	C an..3	**D**		ISO 3166 two alpha code

Segment Notes:

This segment is used to identify the ordering customer of the credit instruction.

Example:
NAD+OY+++TOWER PACKAGING LTD'
NAD+OY+7591234123458::9'

Dependency Notes:
The following composites and data elements are only used when a coded name and address can not be used.
The affected composites and data elements are as follows;
C080 - C059 - 3164 - C819 - 3251 - 3207

5. Segments Layout

Segment number: 37

SG4	- M	9999	-	LIN-DTM-BUS-MOA-SG5-SG6-SG7-SG10
SG10	- M	99999	-	SEQ-DTM-BUS-FII-SG11-SG12-SG13-SG14-SG15-SG16-SG17-SG20
SG14	- C	3	-	NAD-CTA-COM
CTA	- C	1	-	Contact information

Function:

To identify a person or a department to whom communication should be directed.

		EDIFACT	GS1	*	Description
3139	Contact function code	C an..3	**R**		IC = Information contact
C056	DEPARTMENT OR EMPLOYEE DETAILS	C	**O**		
3413	Department or employee name code	C an..17	**O**		
3412	Department or employee name	C an..35	**O**		

Segment Notes:

This segment is used to provide contact details relevant for the party identified in the previous NAD segment.

Example:
CTA+IC+:T. WRIGHT'

5. Segments Layout

Segment number: 38

SG4	- M	9999	-	LIN-DTM-BUS-MOA-SG5-SG6-SG7-SG10
SG10	- M	99999	-	SEQ-DTM-BUS-FII-SG11-SG12-SG13-SG14-SG15-SG16-SG17-SG20
SG14	- C	3	-	NAD-CTA-COM
COM	- C	5	-	Communication contact

Function:

To identify a communication number of a department or a person to whom communication should be directed.

		EDIFACT	GS1	*	Description
C076	COMMUNICATION CONTACT	M	**M**		
3148	Communication address identifier	M an..512	**M**		
3155	Communication address code qualifier	M an..3	**M**		CA = Cable address EI = EDI EM = Electronic mail TE = Telephone AO = Uniform Resource Location (URL)

Segment Notes:

This segment is used to provide communications details relevant to the contact identified in the CTA segment.

Example:
COM+003212187674:FX'

5. Segments Layout

Segment number: 39

SG4	- M	9999 -	LIN-DTM-BUS-MOA-SG5-SG6-SG7-SG10
SG10	- M	99999 -	SEQ-DTM-BUS-FII-SG11-SG12-SG13-SG14-SG15-SG16-SG17-SG20
SG15	- C	3 -	INP-FTX-DTM
INP	- M	1 -	Parties and instruction

Function:

To specify parties to an instruction, the instruction, or both.

		EDIFACT	GS1	*	Description
C849	PARTIES TO INSTRUCTION	C	**A**		
3301	Enacting party identifier	M an..35	**M**		3 = Beneficiary's bank
3285	Instruction receiving party identifier	C an..35	**O**		4 = Beneficiary 5 = Contact party 1
C522	INSTRUCTION	C	**O**		
4403	Instruction type code qualifier	M an..3	**M**		1 = Action required
4401	Instruction description code	C an..3	**O**		AD = Advise AP = Advise by phone AJ = Advise by fax (SWIFT Code) EX = Expedite
1131	Code list identification code	C an..17	**O**		
3055	Code list responsible agency code	C an..3	**D**		
4400	Instruction description	C an..35	**N**		
C850	STATUS OF INSTRUCTION	C	**N**		
4405	Status description code	M an..3			
3036	Party name	C an..35			
1229	Action request/notification description code	C an..3	**N**		

Segment Notes:

This segment is used to identify the party who must carry out an instruction from the ordering customer, and the party to whom the instruction is intended.
DE's 3301 and 3285: As these data elements are being used to provide coded information it is recommended that their format and length be restricted to an..3.

Example:
INP+3:4+1:AP'

5. Segments Layout

Segment number: 40

SG4	- M	9999 -	LIN-DTM-BUS-MOA-SG5-SG6-SG7-SG10
SG10	- M	99999 -	SEQ-DTM-BUS-FII-SG11-SG12-SG13-SG14-SG15-SG16-SG17-SG20
SG15	- C	3 -	INP-FTX-DTM
FTX	- C	1 -	Free text

Function:

To provide free form or coded text information.

		EDIFACT	GS1	*	Description
4451	Text subject code qualifier	M an..3	**M**		AAG = Party instructions
4453	Free text function code	C an..3	**N**		
C107	TEXT REFERENCE	C	**D**		This composite is only used when trading partners have agreed to use mutually defined code values.
4441	Free text value code	M an..17	**M**		Coded reference to standard text between partners.
1131	Code list identification code	C an..17	**O**		
3055	Code list responsible agency code	C an..3	**D**		86 = Assigned by party originating the message
C108	TEXT LITERAL	C	**D**		This composite is only used if coded text can not be used.
4440	Free text value	M an..512	**M**		
4440	Free text value	C an..512	**O**		
4440	Free text value	C an..512	**O**		
4440	Free text value	C an..512	**O**		
4440	Free text value	C an..512	**O**		
3453	Language name code	C an..3	**D**		ISO 639 two alpha code. This data element is only used when non coded free text has been provided in data element C108.
4447	Free text format code	C an..3	**N**		

Segment Notes:

This segment is used to provide additional coded or free text instructions to those provided in the INP segment. Use of this segment in free form is not recommended since in most cases it inhibits automatic processing of the multiple credit advice. Coded references to standard texts is an available functionality which enables automatic processing and reduces transmission and processing overheads. Standard texts should be mutually defined among trading partners and can be used to cover legal and other requirements.

Example:
FTX+AAG+++FUNDS TRANSFERRED TO NUMBER 1 ACCOUNT'

5. Segments Layout

Segment number: 41

SG4	- M	9999	-	LIN-DTM-BUS-MOA-SG5-SG6-SG7-SG10
SG10	- M	99999	-	SEQ-DTM-BUS-FII-SG11-SG12-SG13-SG14-SG15-SG16-SG17-SG20
SG15	- C	3	-	INP-FTX-DTM
DTM	- C	1	-	Date/time/period

Function:

To specify date, and/or time, or period.

		EDIFACT	GS1	*	Description
C507	DATE/TIME/PERIOD	M	**M**		
2005	Date or time or period function code qualifier	M an..3	**M**		174 = Advise after date/time 175 = Advise before date/time 176 = Advise completed date/time 177 = Advise on date/time
2380	Date or time or period value	C an..35	**R**		
2379	Date or time or period format code	C an..3	**R**		102 = CCYYMMDD

Segment Notes:

This segment is used to specify the earliest and latest dates by which the instructions must be carried out.

Example:
DTM+175:200206171000:203'
Advise before 10am on the 17th of June 2002.

5. Segments Layout

Segment number: 42

SG4	- M	9999	-	LIN-DTM-BUS-MOA-SG5-SG6-SG7-SG10
SG10	- M	99999	-	SEQ-DTM-BUS-FII-SG11-SG12-SG13-SG14-SG15-SG16-SG17-SG20
SG16	- C	10	-	GIS-MOA-LOC-NAD-RCS-FTX
GIS	- M	1	-	General indicator

Function:

To transmit a processing indicator.

Notes:
1. This segment will be removed effective with directory D.02B.

		EDIFACT	GS1	*	Description
C529	PROCESSING INDICATOR	M	**M**		
7365	Processing indicator description code	M an..3	**M**		10 = Declaration requested 37 = Complete information
1131	Code list identification code	C an..17	**O**		
3055	Code list responsible agency code	C an..3	**D**		
7187	Process type description code	C an..17	**N**		

Segment Notes:

This segment is used to indicate that the information contained in the following segments will be passed on to and processed by the central and regulatory party identified in the NAD segment.
Note: The use of this segment group is subject to regulations stipulated by regulatory authorities, e.g. Central Bank.

Example:
GIS+10'

5. Segments Layout

Segment number: 43

SG4	- M	9999 -	LIN-DTM-BUS-MOA-SG5-SG6-SG7-SG10
SG10	- M	99999 -	SEQ-DTM-BUS-FII-SG11-SG12-SG13-SG14-SG15-SG16-SG17-SG20
SG16	- C	10 -	GIS-MOA-LOC-NAD-RCS-FTX
MOA	- C	1 -	Monetary amount

Function:

To specify a monetary amount.

		EDIFACT	GS1	*	Description
C516	MONETARY AMOUNT	M	**M**		
5025	Monetary amount type code qualifier	M an..3	**M**		139 = Total payment amount
5004	Monetary amount	C n..35	**R**		
6345	Currency identification code	C an..3	**O**		ISO 4217 three alpha code
6343	Currency type code qualifier	C an..3	**O**		11 = Payment currency
4405	Status description code	C an..3	**N**		

Segment Notes:

This segment is used to specify monetary amounts which must be reported to the regulatory party identified in the NAD segment.

Example:
MOA+139:125000:EUR:11'

5. Segments Layout

Segment number: 44

SG4	- M	9999 -	LIN-DTM-BUS-MOA-SG5-SG6-SG7-SG10
SG10	- M	99999 -	SEQ-DTM-BUS-FII-SG11-SG12-SG13-SG14-SG15-SG16-SG17-SG20
SG16	- C	10 -	GIS-MOA-LOC-NAD-RCS-FTX
LOC	- C	2 -	Place/location identification

Function:

To identify a place or a location and/or related locations.

		EDIFACT	GS1	*	Description
3227	Location function code qualifier	M an..3	**M**		27 = Country of origin 28 = Country of destination of goods 39 = Country of production 40 = Country of trading
C517	LOCATION IDENTIFICATION	C	**A**		
3225	Location name code	C an..25	**A**		ISO 3166 two alpha code
1131	Code list identification code	C an..17	**O**		
3055	Code list responsible agency code	C an..3	**D**		5 = ISO (International Organization for Standardization) 9 = GS1 DE 3055 must be used if DE 3225 is used and does not contain an UN/LOCODE.
3224	Location name	C an..256	**O**		
C519	RELATED LOCATION ONE IDENTIFICATION	C	**N**		
3223	First related location name code	C an..25			
1131	Code list identification code	C an..17			
3055	Code list responsible agency code	C an..3			
3222	First related location name	C an..70			
C553	RELATED LOCATION TWO IDENTIFICATION	C	**N**		
3233	Second related location name code	C an..25			
1131	Code list identification code	C an..17			
3055	Code list responsible agency code	C an..3			
3232	Second related location name	C an..70			
5479	Relation code	C an..3	**N**		

Segment Notes:

This segment is used to indicate any locations relevant to the regulatory party identified in the NAD segment.

Example:
LOC+39+BE'
Goods were produced in Belgium.

5. Segments Layout

Segment number: 45

SG4	- M	9999 -	LIN-DTM-BUS-MOA-SG5-SG6-SG7-SG10
SG10	- M	99999 -	SEQ-DTM-BUS-FII-SG11-SG12-SG13-SG14-SG15-SG16-SG17-SG20
SG16	- C	10 -	GIS-MOA-LOC-NAD-RCS-FTX
NAD	- C	1 -	Name and address

Function:

To specify the name/address and their related function, either by C082 only and/or unstructured by C058 or structured by C080 thru 3207.

		EDIFACT	GS1	*	Description
3035	Party function code qualifier	M an..3	**M**	*	RA = Central bank or regulatory authority
C082	PARTY IDENTIFICATION DETAILS	C	**A**		
3039	Party identifier	M an..35	**M**		For identification of parties it is recommended to use GLN - Format n13.
1131	Code list identification code	C an..17	**O**		
3055	Code list responsible agency code	C an..3	**R**	*	9 = GS1
C058	NAME AND ADDRESS	C	**O**		This composite may only be used to fulfill the requirements of directive 2003/58/EC, article 4.
3124	Name and address description	M an..35	**M**		
3124	Name and address description	C an..35	**O**		
3124	Name and address description	C an..35	**O**		
3124	Name and address description	C an..35	**O**		
3124	Name and address description	C an..35	**O**		
C080	PARTY NAME	C	**D**		
3036	Party name	M an..35	**M**		Party name in clear text.
3036	Party name	C an..35	**O**		
3036	Party name	C an..35	**O**		
3036	Party name	C an..35	**O**		
3036	Party name	C an..35	**O**		
3045	Party name format code	C an..3	**O**		
C059	STREET	C	**D**		
3042	Street and number or post office box identifier	M an..35	**M**		Building Name/Number and Street
3042	Street and number or post office box identifier	C an..35	**O**		Name and/or P.O. Box.
3042	Street and number or post office box identifier	C an..35	**O**		
3042	Street and number or post office box identifier	C an..35	**O**		
3164	City name	C an..35	**D**		City/town name, clear text.
C819	COUNTRY SUB-ENTITY DETAILS	C	**D**		
3229	Country sub-entity name code	C an..9	**O**		
1131	Code list identification code	C an..17	**O**		

5. Segments Layout

Segment number: 45

		EDIFACT	GS1	*	Description
3055	Code list responsible agency code	C an..3	**O**		
3228	Country sub-entity name	C an..70	**O**		County/State, clear text.
3251	Postal identification code	C an..17	**D**		Postal code
3207	Country name code	C an..3	**D**		ISO 3166 two alpha code

Segment Notes:

This segment is used to identify the central and regulatory authority specifying the regulatory information detailed in the GIS and FTX segments.

Example:
NAD+RA+5422331123459::9'

Dependency Notes:
The following composites and data elements are only used when a coded name and address can not be used.
The affected composites and data elements are as follows;
C080 - C059 - 3164 - C819 - 3251 - 3207

5. Segments Layout

Segment number: 46

SG4	- M	9999 -	LIN-DTM-BUS-MOA-SG5-SG6-SG7-SG10
SG10	- M	99999 -	SEQ-DTM-BUS-FII-SG11-SG12-SG13-SG14-SG15-SG16-SG17-SG20
SG16	- C	10 -	GIS-MOA-LOC-NAD-RCS-FTX
RCS	- C	1 -	Requirements and conditions

Function:

To specify sector/subject requirements and conditions.

		EDIFACT	GS1	*	Description
7293	Sector area identification code qualifier	M an..3	**M**	*	25 = Banking sector
C550	REQUIREMENT/CONDITION IDENTIFICATION	C	**A**		
7295	Requirement or condition description identifier	M an..17	**M**		As no EDIFACT code values exist for this data element it is recommended that nationally agreed codes be formulated to identify the requirements and conditions possible due to regulatory requirements.
1131	Code list identification code	C an..17	**O**		
3055	Code list responsible agency code	C an..3	**D**		86 = Assigned by party originating the message
7294	Requirement or condition description	C an..35	**O**		
1229	Action request/notification description code	C an..3	**N**		
3207	Country name code	C an..3	**N**		

Segment Notes:

This segment is used to indicate any requirements and conditions related to the transaction which is being reported to the regulatory authorities.

Example:
RCS+25+AB1::86'
Code assigned by the message sender indicating that the requirements and conditions relate to regulatory requirements to report the payment of amount in excess of a certain amount.

5. Segments Layout

Segment number: 47

SG4	- M	9999	-	LIN-DTM-BUS-MOA-SG5-SG6-SG7-SG10
SG10	- M	99999	-	SEQ-DTM-BUS-FII-SG11-SG12-SG13-SG14-SG15-SG16-SG17-SG20
SG16	- C	10	-	GIS-MOA-LOC-NAD-RCS-FTX
FTX	- C	10	-	Free text

Function:

To provide free form or coded text information.

		EDIFACT	GS1	*	Description
4451	Text subject code qualifier	M an..3	**M**	*	REG = Regulatory information
4453	Free text function code	C an..3	**N**		
C107	TEXT REFERENCE	C	**D**		This composite is only used when trading partners have agreed to use mutually defined code values.
4441	Free text value code	M an..17	**M**		A code identifying standard text agreed between partners.
1131	Code list identification code	C an..17	**O**		
3055	Code list responsible agency code	C an..3	**D**		
C108	TEXT LITERAL	C	**D**		This composite is only used if coded text can not be used.
4440	Free text value	M an..512	**M**		
4440	Free text value	C an..512	**O**		
4440	Free text value	C an..512	**O**		
4440	Free text value	C an..512	**O**		
4440	Free text value	C an..512	**O**		
3453	Language name code	C an..3	**D**		ISO 639 two alpha code. This data element is only used when non coded free text has been provided in data element C108.
4447	Free text format code	C an..3	**N**		

Segment Notes:

This segment is used to provide free or coded text information required by the regulatory authorities. The form and content of this segment is dependent upon the central bank or regulatory authority's requirements.
Use of this segment in free form is not recommended since in most cases it inhibits automatic processing of the multiple credit advice. Coded references to standard texts is an available functionality which enables automatic processing and reduces transmission and processing overheads. Standard texts should be mutually defined among trading partners and can be used to cover legal and other requirements.

Example:
FTX+REG++001::ZZZ'

5. Segments Layout

Segment number: 48

SG4	- M	9999 -	LIN-DTM-BUS-MOA-SG5-SG6-SG7-SG10
SG10	- M	99999 -	SEQ-DTM-BUS-FII-SG11-SG12-SG13-SG14-SG15-SG16-SG17-SG20
SG17	- C	5 -	FCA-MOA-SG18
FCA	- M	1 -	Financial charges allocation

Function:

Description of allocation of charges.

		EDIFACT	GS1	*	Description
4471	Settlement means code	M an..3	**M**	*	13 = All charges borne by payee 14 = Each pay own cost 15 = All charges borne by payor
C878	CHARGE/ALLOWANCE ACCOUNT	C	**O**		
3434	Institution branch identifier	M an..17	**M**		
1131	Code list identification code	C an..17	**O**		25 = Bank identification 154 = Bank branch sorting identification
3055	Code list responsible agency code	C an..3	**D**		5 = ISO (International Organization for Standardization)
3194	Account holder identifier	C an..35	**O**		If this data element is not used the primary account (i.e. the ordering bank account) specified in the FII segment (group 2 or 6) should be used. The account number quotes here must always be maintained by the bank issuing the message.
6345	Currency identification code	C an..3	**O**		ISO 4217 three alpha

Segment Notes:

This segment is used to identify the method for allocating charges and allowances, to a Beneficiary or Payee account. It may also identify an account where charges/allowances should be directed when different to the primary account.
This segment must not be used if the charge allocation details have already been provided in the FCA segment in group 7.

Example:
FCA+15+DRESDEFF666:25:5'

5. Segments Layout

Segment number: 49

SG4	- M	9999 -	LIN-DTM-BUS-MOA-SG5-SG6-SG7-SG10
SG10	- M	99999 -	SEQ-DTM-BUS-FII-SG11-SG12-SG13-SG14-SG15-SG16-SG17-SG20
SG17	- C	5 -	FCA-MOA-SG18
MOA	- C	2 -	Monetary amount

Function:

To specify a monetary amount.

		EDIFACT	GS1	*	Description
C516	MONETARY AMOUNT	M	**M**		
5025	Monetary amount type code qualifier	M an..3	**M**	*	23 = Charge amount 25 = Charge/allowance basis 204 = Allowance amount 259 = Total charges 260 = Total allowances
5004	Monetary amount	C n..35	**R**		
6345	Currency identification code	C an..3	**O**		ISO 4217 three alpha code
6343	Currency type code qualifier	C an..3	**N**		
4405	Status description code	C an..3	**N**		

Segment Notes:

This segment is used to specify the monetary value of all allowances and charges related to individual credit transactions and if necessary the basis for the allowances and charges.

Example:
MOA+25:50000'

5. Segments Layout

Segment number: 50

SG4	- M	9999 -	LIN-DTM-BUS-MOA-SG5-SG6-SG7-SG10
SG10	- M	99999 -	SEQ-DTM-BUS-FII-SG11-SG12-SG13-SG14-SG15-SG16-SG17-SG20
SG17	- C	5 -	FCA-MOA-SG18
SG18	- C	20 -	ALC-PCD-MOA-CUX-DTM-SG19
ALC	- M	1 -	Allowance or charge

Function:

To identify allowance or charge details.

		EDIFACT	GS1	*	Description
5463	Allowance or charge code qualifier	M an..3	**M**		A = Allowance C = Charge
C552	ALLOWANCE/CHARGE INFORMATION	C	**O**		
1230	Allowance or charge identifier	C an..35	**D**		If code '69' is used in DE 5189, the agreement number must be specified in DE 1230.
5189	Allowance or charge identification code	C an..3	**O**		1 = Handling commission 13 = Domicilation commission 30 = Bank charges 69 = Charge for a customer specific finish
4471	Settlement means code	C an..3	**N**		
1227	Calculation sequence code	C an..3	**D**		If the allowance or charge is not to be applied against a fixed price then the calculation sequence indicator must be included.
C214	SPECIAL SERVICES IDENTIFICATION	C	**N**		
7161	Special service description code	C an..3			
1131	Code list identification code	C an..17			
3055	Code list responsible agency code	C an..3			
7160	Special service description	C an..35			
7160	Special service description	C an..35			

Segment Notes:

This segment is used to provide a breakdown of all allowances and charges associated with the transaction.

Example:
ALC+C+:1'

5. Segments Layout

Segment number: 51

SG4	- M	9999	-	LIN-DTM-BUS-MOA-SG5-SG6-SG7-SG10
SG10	- M	99999	-	SEQ-DTM-BUS-FII-SG11-SG12-SG13-SG14-SG15-SG16-SG17-SG20
SG17	- C	5	-	FCA-MOA-SG18
SG18	- C	20	-	ALC-PCD-MOA-CUX-DTM-SG19
PCD	- C	1	-	Percentage details

Function:

To specify percentage information.

		EDIFACT	GS1	*	Description
C501	PERCENTAGE DETAILS	M	**M**		
5245	Percentage type code qualifier	M an..3	**M**		3 = Allowance or charge
5482	Percentage	C n..10	**R**		
5249	Percentage basis identification code	C an..3	**O**		
1131	Code list identification code	C an..17	**O**		
3055	Code list responsible agency code	C an..3	**D**		
4405	Status description code	C an..3	**N**		

Segment Notes:

This segment is used to specify the percentage to be used when calculating the allowance or charge.

Example:
PCD+3:4.23'

5. Segments Layout

Segment number: 52

SG4	- M	9999	-	LIN-DTM-BUS-MOA-SG5-SG6-SG7-SG10
SG10	- M	99999	-	SEQ-DTM-BUS-FII-SG11-SG12-SG13-SG14-SG15-SG16-SG17-SG20
SG17	- C	5	-	FCA-MOA-SG18
SG18	- C	20	-	ALC-PCD-MOA-CUX-DTM-SG19
MOA	- C	2	-	Monetary amount

Function:

To specify a monetary amount.

		EDIFACT	GS1	*	Description
C516	MONETARY AMOUNT	M	**M**		
5025	Monetary amount type code qualifier	M an..3	**M**		8 = Allowance or charge amount 25 = Charge/allowance basis
5004	Monetary amount	C n..35	**R**		
6345	Currency identification code	C an..3	**O**		
6343	Currency type code qualifier	C an..3	**N**		
4405	Status description code	C an..3	**O**		

Segment Notes:

This segment is used to specify the amount and if necessary the basis amount to be used when calculating the allowances or charges.

Example:
MOA+8:1400'

5. Segments Layout

Segment number: 53

SG4	- M	9999 -	LIN-DTM-BUS-MOA-SG5-SG6-SG7-SG10
SG10	- M	99999 -	SEQ-DTM-BUS-FII-SG11-SG12-SG13-SG14-SG15-SG16-SG17-SG20
SG17	- C	5 -	FCA-MOA-SG18
SG18	- C	20 -	ALC-PCD-MOA-CUX-DTM-SG19
CUX	- C	1 -	Currencies

Function:

To specify currencies used in the transaction and relevant details for the rate of exchange.

		EDIFACT	GS1	*	Description
C504	CURRENCY DETAILS	C	**R**		
6347	Currency usage code qualifier	M an..3	**M**	*	2 = Reference currency
6345	Currency identification code	C an..3	**R**		ISO 4217 three alpha
6343	Currency type code qualifier	C an..3	**R**	*	11 = Payment currency
6348	Currency rate value	C n..4	**D**		
C504	CURRENCY DETAILS	C	**D**		Second occurrence of this composite is only used if a target currency is being specified.
6347	Currency usage code qualifier	M an..3	**M**	*	3 = Target currency
6345	Currency identification code	C an..3	**R**		ISO 4217 three alpha
6343	Currency type code qualifier	C an..3	**R**	*	4 = Invoicing currency 17 = Charge calculation currency
6348	Currency rate value	C n..4	**D**		
5402	Currency exchange rate	C n..12	**D**		The rate of exchange which applies to the currency. The rate of exchange is only used if a target currency has been identified in the second occurrence of C504.
6341	Exchange rate currency market identifier	C an..3	**N**		

Segment Notes:

This segment is used to provide the exchange rate related to the allowances or charges.
The CUX segment is mandatory for international exchanges.
This segment is used to provide the exchange rate related to the allowances or charges.
When specifying Reference and Target Currencies for international trade, one occurrence of CUX is all that is required. The reference currency is identified in the first occurrence of composite C504, with the target currency specified in the second occurrence of C504. The rate of exchange between the two is detailed in DE 5402.
The general rule for calculating rate of exchange is as follows;
Reference Currency multiplied by Rate = Target Currency.

Example:
CUX+2:EUR:11+3:USD:4+0.90243'

5. Segments Layout

Segment number: 54

SG4	- M	9999 -	LIN-DTM-BUS-MOA-SG5-SG6-SG7-SG10
SG10	- M	99999 -	SEQ-DTM-BUS-FII-SG11-SG12-SG13-SG14-SG15-SG16-SG17-SG20
SG17	- C	5 -	FCA-MOA-SG18
SG18	- C	20 -	ALC-PCD-MOA-CUX-DTM-SG19
DTM	- C	2 -	Date/time/period

Function:

To specify date, and/or time, or period.

		EDIFACT	GS1	*	Description
C507	DATE/TIME/PERIOD	M	**M**		
2005	Date or time or period function code qualifier	M an..3	**M**	*	134 = Rate of exchange date/time 211 = 360/30 212 = 360/28-31 213 = 365-6/30 214 = 365-6/28-31 215 = 365/28-31 216 = 365/30 273 = Validity period Code 211 - Calculation is based on year of 360 days, month of 30 days. Code 212 - Calculation is based on year of 360 days, month of 28-31 days. Code 213 - Calculation is based on year of 365-6 days, month of 30 days. Code 214 - Calculation is based on year of 365-6 days, month of 28-31 days. Code 215 - Calculation is based on year of 365 days, month of 28-31 days. Code 216 - Calculation is based on year of 365 days, month of 30 days.
2380	Date or time or period value	C an..35	**R**		
2379	Date or time or period format code	C an..3	**R**		102 = CCYYMMDD 107 = DDD 718 = CCYYMMDD-CCYYMMDD

Segment Notes:

This segment is used to specify the date on which a rate of exchange was quoted.

Example:
DTM+134:20020601:102'

5. Segments Layout

Segment number: 55

SG4	- M	9999 -	LIN-DTM-BUS-MOA-SG5-SG6-SG7-SG10
SG10	- M	99999 -	SEQ-DTM-BUS-FII-SG11-SG12-SG13-SG14-SG15-SG16-SG17-SG20
SG17	- C	5 -	FCA-MOA-SG18
SG18	- C	20 -	ALC-PCD-MOA-CUX-DTM-SG19
SG19	- C	5 -	TAX-MOA
TAX	- M	1 -	Duty/tax/fee details

Function:
To specify relevant duty/tax/fee information.

		EDIFACT	GS1	*	Description
5283	Duty or tax or fee function code qualifier	M an..3	**M**		5 = Customs duty 6 = Fee 7 = Tax
C241	DUTY/TAX/FEE TYPE	C	**D**		
5153	Duty or tax or fee type name code	C an..3	**O**		GST = Goods and services tax OTH = Other taxes VAT = Value added tax
1131	Code list identification code	C an..17	**O**		
3055	Code list responsible agency code	C an..3	**D**		
5152	Duty or tax or fee type name	C an..35	**O**		
C533	DUTY/TAX/FEE ACCOUNT DETAIL	C	**O**		
5289	Duty or tax or fee account code	M an..6	**M**		
1131	Code list identification code	C an..17	**O**		
3055	Code list responsible agency code	C an..3	**D**		
5286	Duty or tax or fee assessment basis value	C an..15	**O**		
C243	DUTY/TAX/FEE DETAIL	C	**A**		
5279	Duty or tax or fee rate code	C an..7	**O**		
1131	Code list identification code	C an..17	**O**		
3055	Code list responsible agency code	C an..3	**D**		
5278	Duty or tax or fee rate	C an..17	**R**		The actual rate of tax/duty.
5273	Duty or tax or fee rate basis code	C an..12	**O**		
1131	Code list identification code	C an..17	**O**		
3055	Code list responsible agency code	C an..3	**D**		
5305	Duty or tax or fee category code	C an..3	**D**		A = Mixed tax rate E = Exempt from tax S = Standard rate
3446	Party tax identifier	C an..20	**O**		
1227	Calculation sequence code	C an..3	**N**		

5. Segments Layout

Segment number: 55

Segment Notes:

This segment is used to specify any taxes associated with the allowances and charges.

Example:
TAX+7+VAT+++:::18.5+S'

Dependency Notes:
DE C241 and 5305: Tax types and categories will vary from country to country. They should be defined by national guidelines.

5. Segments Layout

Segment number: 56

SG4	- M	9999 -	LIN-DTM-BUS-MOA-SG5-SG6-SG7-SG10
SG10	- M	99999 -	SEQ-DTM-BUS-FII-SG11-SG12-SG13-SG14-SG15-SG16-SG17-SG20
SG17	- C	5 -	FCA-MOA-SG18
SG18	- C	20 -	ALC-PCD-MOA-CUX-DTM-SG19
SG19	- C	5 -	TAX-MOA
MOA	- C	2 -	Monetary amount

Function:

To specify a monetary amount.

		EDIFACT	GS1	*	Description
C516	MONETARY AMOUNT	M	**M**		
5025	Monetary amount type code qualifier	M an..3	**M**		55 = Duty amount 56 = Duty/tax/fee basis amount 161 = Duty, tax or fee amount
5004	Monetary amount	C n..35	**R**		
6345	Currency identification code	C an..3	**O**		
6343	Currency type code qualifier	C an..3	**N**		
4405	Status description code	C an..3	**N**		

Segment Notes:

This segment is used to indicate the tax or duty amount for the tax rates specified in the previous TAX segment.

Example:
MOA+55:6500'

5. Segments Layout

Segment number: 57

SG4	- M	9999 -	LIN-DTM-BUS-MOA-SG5-SG6-SG7-SG10
SG10	- M	99999 -	SEQ-DTM-BUS-FII-SG11-SG12-SG13-SG14-SG15-SG16-SG17-SG20
SG20	- C	1 -	PRC-FTX-SG21-SG27
PRC	- M	1 -	Process identification

Function:

To identify a process.

		EDIFACT	GS1	*	Description
C242	PROCESS TYPE AND DESCRIPTION	C	**R**		
7187	Process type description code	M an..17	**M**	*	8 = Processing of structured information 11 = Processing of unstructured information 9 = Processing of identical information in structured and unstructured form 8 - The information following this segment is presented in a structured format using segments such as the DOC and MOA in segment group 21. 11 - The information following this segment is presented in an unstructured format using the following FTX segment.
1131	Code list identification code	C an..17	**O**		
3055	Code list responsible agency code	C an..3	**O**		
7186	Process type description	C an..35	**O**		
7186	Process type description	C an..35	**O**		
C830	PROCESS IDENTIFICATION DETAILS	C	**N**		
7191	Process description code	C an..17			
1131	Code list identification code	C an..17			
3055	Code list responsible agency code	C an..3			
7190	Process description	C an..70			

Segment Notes:

This segment is used to provide processing information related to the credit instruction.
It should be noted that information sent in groups 21 through 27 is generated by the ordering party and is simply forwarded to the beneficiary via the intermediary bank(s) without amendment.

Example:
PRC+8'

5. Segments Layout

Segment number: 58

SG4	- M	9999 -	LIN-DTM-BUS-MOA-SG5-SG6-SG7-SG10
SG10	- M	99999 -	SEQ-DTM-BUS-FII-SG11-SG12-SG13-SG14-SG15-SG16-SG17-SG20
SG20	- C	1 -	PRC-FTX-SG21-SG27
FTX	- C	5 -	Free text

Function:

To provide free form or coded text information.

		EDIFACT	GS1	*	Description
4451	Text subject code qualifier	M an..3	**M**		PMT = Payment information
4453	Free text function code	C an..3	**N**		
C107	TEXT REFERENCE	C	**D**		This composite is only used when trading partners have agreed to use mutually defined code values.
4441	Free text value code	M an..17	**M**		A code identifying standard text agreed between trading partners.
1131	Code list identification code	C an..17	**O**		
3055	Code list responsible agency code	C an..3	**D**		
C108	TEXT LITERAL	C	**D**		This composite is only used if coded text can not be used.
4440	Free text value	M an..512	**M**		
4440	Free text value	C an..512	**O**		
4440	Free text value	C an..512	**O**		
4440	Free text value	C an..512	**O**		
4440	Free text value	C an..512	**O**		
3453	Language name code	C an..3	**D**		ISO 639 two alpha code. This data element is only used when non coded free text has been provided in data element C108.
4447	Free text format code	C an..3	**N**		

Segment Notes:

This segment is used to provide free or coded text information related to the processing of the payment.
Use of this segment in free form is not recommended since in most cases it inhibits automatic processing of the multiple credit advice. Coded references to standard texts is an available functionality which enables automatic processing and reduces transmission and processing overheads. Standard texts should be mutually defined among trading partners and can be used to cover legal and other requirements.

Example:
FTX+PMT+++PAYMENT RELATES TO ACCUMULATED INVOICES JAN 2002'

5. Segments Layout

Segment number: 59

SG4	- M	9999 -	LIN-DTM-BUS-MOA-SG5-SG6-SG7-SG10
SG10	- M	99999 -	SEQ-DTM-BUS-FII-SG11-SG12-SG13-SG14-SG15-SG16-SG17-SG20
SG20	- C	1 -	PRC-FTX-SG21-SG27
SG21	- C	9999 -	DOC-MOA-DTM-RFF-NAD-SG22-SG23-SG24
DOC	- M	1 -	Document/message details

Function:

To identify documents and details directly related to it.

		EDIFACT	GS1	*	Description
C002	DOCUMENT/MESSAGE NAME	M	**M**		
1001	Document name code	C an..3	**R**		82 = Metered services invoice 83 = Credit note related to financial adjustments 84 = Debit note related to financial adjustments 380 = Commercial invoice 381 = Credit note - goods and services 383 = Debit note - goods and services 385 = Consolidated invoice 386 = Prepayment invoice 389 = Self-billed invoice 390 = Delcredere invoice
1131	Code list identification code	C an..17	**O**		
3055	Code list responsible agency code	C an..3	**D**		
1000	Document name	C an..35	**N**		
C503	DOCUMENT/MESSAGE DETAILS	C	**R**		
1004	Document identifier	C an..35	**R**		
1373	Document status code	C an..3	**O**		2 = Accompanying goods 4 = To arrive by separate EDI message 6 = To arrive by manual means
1366	Document source description	C an..70	**N**		
3453	Language name code	C an..3	**O**		ISO 639 two alpha code.
1056	Version identifier	C an..9	**N**		
1060	Revision identifier	C an..6	**N**		
3153	Communication medium type code	C an..3	**N**		
1220	Document copies required quantity	C n..2	**N**		
1218	Document originals required quantity	C n..2	**N**		

Segment Notes:

This segment is used to provide details of the documents, e.g. a group of invoices, to which the multiple credit advice refers.
This information is generated by the party making the payment and must be included at least once in the Multiple Credit Advice message. Individual document line item information is provided in the DLI segment.

Example:

5. Segments Layout

Segment number: 59

```
DOC+380+43534'
```

5. Segments Layout

Segment number: 60

SG4	- M	9999 -	LIN-DTM-BUS-MOA-SG5-SG6-SG7-SG10
SG10	- M	99999 -	SEQ-DTM-BUS-FII-SG11-SG12-SG13-SG14-SG15-SG16-SG17-SG20
SG20	- C	1 -	PRC-FTX-SG21-SG27
SG21	- C	9999 -	DOC-MOA-DTM-RFF-NAD-SG22-SG23-SG24
MOA	- C	5 -	Monetary amount

Function:

To specify a monetary amount.

		EDIFACT	GS1	*	Description
C516	MONETARY AMOUNT	M	**M**		
5025	Monetary amount type code qualifier	M an..3	**M**		9 = Amount due/amount payable 11 = Amount paid 12 = Amount remitted 52 = Discount amount 53 = Discount amount due 109 = Payment discount amount 126 = To collect 128 = Total amount 139 = Total payment amount 143 = Transfer amount When used in conjunction with code 481 in data element 1001 of the DOC segment only the amount remitted (code 12) should be used here. When used with all other codes in data element 1001 in the DOC segment it is recommended that the amount due (code 9) and the amount remitted (code 12) be included in this data element.
5004	Monetary amount	C n..35	**R**		
6345	Currency identification code	C an..3	**N**		
6343	Currency type code qualifier	C an..3	**N**		
4405	Status description code	C an..3	**N**		

Segment Notes:

This segment is used to specify monetary amounts related to the complete document identified in the previous DOC segment.

Example:
MOA+12:15677'

5. Segments Layout

Segment number: 61

SG4	- M	9999 -	LIN-DTM-BUS-MOA-SG5-SG6-SG7-SG10
SG10	- M	99999 -	SEQ-DTM-BUS-FII-SG11-SG12-SG13-SG14-SG15-SG16-SG17-SG20
SG20	- C	1 -	PRC-FTX-SG21-SG27
SG21	- C	9999 -	DOC-MOA-DTM-RFF-NAD-SG22-SG23-SG24
DTM	- C	5 -	Date/time/period

Function:

To specify date, and/or time, or period.

		EDIFACT	GS1	*	Description
C507	DATE/TIME/PERIOD	M	**M**		
2005	Date or time or period function code qualifier	M an..3	**M**	*	137 = Document/message date/time 138 = Payment date 171 = Reference date/time 227 = Beneficiary's banks due date 265 = Due date
2380	Date or time or period value	C an..35	**R**		
2379	Date or time or period format code	C an..3	**R**		102 = CCYYMMDD

Segment Notes:

This segment is used to specify dates related to the document identified in the DOC segment.

Example:
DTM+137:20020510:102'

5. Segments Layout

Segment number: 62

SG4	- M	9999 -	LIN-DTM-BUS-MOA-SG5-SG6-SG7-SG10
SG10	- M	99999 -	SEQ-DTM-BUS-FII-SG11-SG12-SG13-SG14-SG15-SG16-SG17-SG20
SG20	- C	1 -	PRC-FTX-SG21-SG27
SG21	- C	9999 -	DOC-MOA-DTM-RFF-NAD-SG22-SG23-SG24
RFF	- C	5 -	Reference

Function:

To specify a reference.

		EDIFACT	GS1	*	Description
C506	REFERENCE	M	**M**		
1153	Reference code qualifier	M an..3	**M**		AAB = Proforma invoice number AAJ = Delivery order number AAK = Despatch advice number CD = Credit note number CR = Customer reference number CT = Contract number DQ = Delivery note number IV = Invoice number ON = Order number (buyer) PL = Price list number POR = Purchase order response number PP = Purchase order change number VN = Order number (supplier)
1154	Reference identifier	C an..70	**R**		
1156	Document line identifier	C an..6	**N**		
4000	Reference version identifier	C an..35	**N**		
1060	Revision identifier	C an..6	**N**		

Segment Notes:

This segment is used to provide any additional references relevant to the currently identified DOC segment.

Example:
RFF+ON:A-7664'

5. Segments Layout

Segment number: 63

SG4	- M	9999 -	LIN-DTM-BUS-MOA-SG5-SG6-SG7-SG10
SG10	- M	99999 -	SEQ-DTM-BUS-FII-SG11-SG12-SG13-SG14-SG15-SG16-SG17-SG20
SG20	- C	1 -	PRC-FTX-SG21-SG27
SG21	- C	9999 -	DOC-MOA-DTM-RFF-NAD-SG22-SG23-SG24
NAD	- C	2 -	Name and address

Function:

To specify the name/address and their related function, either by C082 only and/or unstructured by C058 or structured by C080 thru 3207.

		EDIFACT	GS1	*	Description
3035	Party function code qualifier	M an..3	**M**		BY = Buyer DP = Delivery party II = Issuer of invoice IV = Invoicee SU = Supplier UD = Ultimate customer
C082	PARTY IDENTIFICATION DETAILS	C	**A**		
3039	Party identifier	M an..35	**M**		GLN - Format n13 For the identification of parties it is recommended to use GLN - Format n13.
1131	Code list identification code	C an..17	**O**		
3055	Code list responsible agency code	C an..3	**R**	*	9 = GS1
C058	NAME AND ADDRESS	C	**O**		This composite may only be used to fulfill the requirements of directive 2003/58/EC, article 4.
3124	Name and address description	M an..35	**M**		
3124	Name and address description	C an..35	**O**		
3124	Name and address description	C an..35	**O**		
3124	Name and address description	C an..35	**O**		
3124	Name and address description	C an..35	**O**		
C080	PARTY NAME	C	**D**		
3036	Party name	M an..35	**M**		Party name in clear text.
3036	Party name	C an..35	**O**		
3036	Party name	C an..35	**O**		
3036	Party name	C an..35	**O**		
3036	Party name	C an..35	**O**		
3045	Party name format code	C an..3	**O**		
C059	STREET	C	**D**		
3042	Street and number or post office box identifier	M an..35	**M**		Building name/number and street name.
3042	Street and number or post office box identifier	C an..35	**O**		
3042	Street and number or post office box identifier	C an..35	**O**		
3042	Street and number or post office box identifier	C an..35	**O**		

5. Segments Layout

Segment number: 63

		EDIFACT	GS1	*	Description
3164	City name	C an..35	**D**		City/town name, clear text.
C819	COUNTRY SUB-ENTITY DETAILS	C	**D**		
3229	Country sub-entity name code	C an..9	**O**		
1131	Code list identification code	C an..17	**O**		
3055	Code list responsible agency code	C an..3	**O**		
3228	Country sub-entity name	C an..70	**O**		County/State, clear text.
3251	Postal identification code	C an..17	**D**		Postal code
3207	Country name code	C an..3	**D**		ISO 3166 two alpha code

Segment Notes:

This segment is used to identify any additional parties related to the currently identified document, e.g. delivery party.

Example:
NAD+DP+5071615111100::9'

Dependency Notes:
The following composites and data elements are only used when a coded name and address can not be used.
The affected composites and data elements are as follows;
C080 - C059 - 3164 - C819 - 3251 - 3207

5. Segments Layout

Segment number: 64

SG4	- M	9999 -	LIN-DTM-BUS-MOA-SG5-SG6-SG7-SG10
SG10	- M	99999 -	SEQ-DTM-BUS-FII-SG11-SG12-SG13-SG14-SG15-SG16-SG17-SG20
SG20	- C	1 -	PRC-FTX-SG21-SG27
SG21	- C	9999 -	DOC-MOA-DTM-RFF-NAD-SG22-SG23-SG24
SG22	- C	5 -	CUX-DTM
CUX	- M	1 -	Currencies

Function:

To specify currencies used in the transaction and relevant details for the rate of exchange.

		EDIFACT	GS1	*	Description
C504	CURRENCY DETAILS	C	**R**		
6347	Currency usage code qualifier	M an..3	**M**	*	2 = Reference currency
6345	Currency identification code	C an..3	**R**		ISO 4217 three alpha
6343	Currency type code qualifier	C an..3	**R**	*	11 = Payment currency
6348	Currency rate value	C n..4	**N**		
C504	CURRENCY DETAILS	C	**D**		Second occurrence of this composite is only used if a target currency is being specified.
6347	Currency usage code qualifier	M an..3	**M**	*	3 = Target currency
6345	Currency identification code	C an..3	**R**		ISO 4217 three alpha
6343	Currency type code qualifier	C an..3	**R**	*	4 = Invoicing currency
6348	Currency rate value	C n..4	**N**		
5402	Currency exchange rate	C n..12	**D**		The rate of exchange is only used if a target currency has been identified in the second occurrence of C504.
6341	Exchange rate currency market identifier	C an..3	**N**		

Segment Notes:

This segment is used to provide currency rate of exchange information used to convert amounts specified in the MOA segment for the referenced document, to an amount expressed in terms of the remittance/payment currency. This CUX segment will only be used when the currency of its rate of exchange is different from the default global currency or its rate of exchange specified in the CUX segment at heading level.
When specifying the Reference and Target currencies for international trade, one occurrence of CUX is all that is required. The reference currency is identified in the first occurrence of composite C504, with the target currency specified in the second occurrence of C504. The rate of exchange between the two is detailed in DE 5402.
The general rule for calculating the rate of exchange is as follows;
Reference Currency multiplied by Rate = Target Currency.

Example:
CUX+2:EUR:11+3:USD:4+0.90243'

5. Segments Layout

Segment number: 65

SG4	- M	9999 -	LIN-DTM-BUS-MOA-SG5-SG6-SG7-SG10
SG10	- M	99999 -	SEQ-DTM-BUS-FII-SG11-SG12-SG13-SG14-SG15-SG16-SG17-SG20
SG20	- C	1 -	PRC-FTX-SG21-SG27
SG21	- C	9999 -	DOC-MOA-DTM-RFF-NAD-SG22-SG23-SG24
SG22	- C	5 -	CUX-DTM
DTM	- C	1 -	Date/time/period

Function:

To specify date, and/or time, or period.

		EDIFACT	GS1	*	Description
C507	DATE/TIME/PERIOD	M	**M**		
2005	Date or time or period function code qualifier	M an..3	**M**	*	134 = Rate of exchange date/time 273 = Validity period
2380	Date or time or period value	C an..35	**R**		
2379	Date or time or period format code	C an..3	**R**		102 = CCYYMMDD 718 = CCYYMMDD-CCYYMMDD

Segment Notes:

This segment is used to specify any dates related to the currency information specified in the previous CUX segment.

Example:
DTM+134:20020105:102'

5. Segments Layout

Segment number: 66

SG4	- M	9999 -	LIN-DTM-BUS-MOA-SG5-SG6-SG7-SG10
SG10	- M	99999 -	SEQ-DTM-BUS-FII-SG11-SG12-SG13-SG14-SG15-SG16-SG17-SG20
SG20	- C	1 -	PRC-FTX-SG21-SG27
SG21	- C	9999 -	DOC-MOA-DTM-RFF-NAD-SG22-SG23-SG24
SG23	- C	100 -	AJT-MOA-RFF
AJT	- M	1 -	Adjustment details

Function:

To identify the reason for an adjustment.

		EDIFACT	GS1	*	Description
4465	Adjustment reason description code	M an..3	**M**		1 = Agreed settlement 2 = Below specification goods 3 = Damaged goods 4 = Short delivery 5 = Price query 6 = Proof of delivery required 9 = Invoice error 14 = Wrong delivery 17 = Transport damage 20 = Discount for late delivery 32 = Goods not delivered 52 = Wrong invoice
1082	Line item identifier	C an..6	**N**		If specific references or information related to a line number in a document are required, then the line item number is given in the DLI segment and the adjustment given in the AJT segment, see segment group 24 and segment group 26.

Segment Notes:

This segment is used to indicate the reason for an adjustment to the current document.
Adjustments can be given for the whole referenced document identified in the DOC segment and additionally, can also be given per line item in the following DLI segment group.

Example:
AJT+4'

5. Segments Layout

Segment number: 67

SG4	- M	9999 -	LIN-DTM-BUS-MOA-SG5-SG6-SG7-SG10
SG10	- M	99999 -	SEQ-DTM-BUS-FII-SG11-SG12-SG13-SG14-SG15-SG16-SG17-SG20
SG20	- C	1 -	PRC-FTX-SG21-SG27
SG21	- C	9999 -	DOC-MOA-DTM-RFF-NAD-SG22-SG23-SG24
SG23	- C	100 -	AJT-MOA-RFF
MOA	- C	1 -	Monetary amount

Function:

To specify a monetary amount.

		EDIFACT	GS1	*	Description
C516	MONETARY AMOUNT	M	**M**		
5025	Monetary amount type code qualifier	M an..3	**M**	*	5 = Adjusted amount 165 = Adjustment amount
5004	Monetary amount	C n..35	**R**		
6345	Currency identification code	C an..3	**N**		
6343	Currency type code qualifier	C an..3	**N**		
4405	Status description code	C an..3	**N**		

Segment Notes:

This segment is used to indicate the value of the adjusted amount for the current document.
Adjustment amounts may be given for information purposes only, i.e. not for calculation. The adjustment amount will not necessarily equal the difference between the amount due and the amount remitted.

Example:
MOA+5:8700'

5. Segments Layout

Segment number: 68

SG4	- M	9999 -	LIN-DTM-BUS-MOA-SG5-SG6-SG7-SG10
SG10	- M	99999 -	SEQ-DTM-BUS-FII-SG11-SG12-SG13-SG14-SG15-SG16-SG17-SG20
SG20	- C	1 -	PRC-FTX-SG21-SG27
SG21	- C	9999 -	DOC-MOA-DTM-RFF-NAD-SG22-SG23-SG24
SG23	- C	100 -	AJT-MOA-RFF
RFF	- C	1 -	Reference

Function:

To specify a reference.

		EDIFACT	GS1	*	Description
C506	REFERENCE	M	**M**		
1153	Reference code qualifier	M an..3	**M**		AAK = Despatch advice number ON = Order number (buyer) PL = Price list number PP = Purchase order change number POR = Purchase order response number VN = Order number (supplier)
1154	Reference identifier	C an..70	**R**		
1156	Document line identifier	C an..6	**N**		
4000	Reference version identifier	C an..35	**N**		
1060	Revision identifier	C an..6	**N**		

Segment Notes:

This segment is used to specify any references associated with the adjusted amounts.
If specific references or information related to a line item number in a document are required then this information is provided in the AJT segment group (group 26) at DLI level.

Example:
RFF+PL:JAN-2002'

5. Segments Layout

Segment number: 69

SG4	- M	9999	-	LIN-DTM-BUS-MOA-SG5-SG6-SG7-SG10
SG10	- M	99999	-	SEQ-DTM-BUS-FII-SG11-SG12-SG13-SG14-SG15-SG16-SG17-SG20
SG20	- C	1	-	PRC-FTX-SG21-SG27
SG21	- C	9999	-	DOC-MOA-DTM-RFF-NAD-SG22-SG23-SG24
SG24	- C	9999	-	DLI-MOA-PIA-DTM-SG26
DLI	- M	1	-	Document line identification

Function:

To specify the processing mode of a specific line within a referenced document.

		EDIFACT	GS1	*	Description
1073	Document line action code	M an..3	**M**		1 = Included in document/transaction 2 = Excluded from document/transaction
1082	Line item identifier	M an..6	**M**		

Segment Notes:

This segment is used to identify individual line items within the document identified in the DOC segment.

Example:
DLI+2+55'

5. Segments Layout

Segment number: 70

SG4	- M	9999 -	LIN-DTM-BUS-MOA-SG5-SG6-SG7-SG10
SG10	- M	99999 -	SEQ-DTM-BUS-FII-SG11-SG12-SG13-SG14-SG15-SG16-SG17-SG20
SG20	- C	1 -	PRC-FTX-SG21-SG27
SG21	- C	9999 -	DOC-MOA-DTM-RFF-NAD-SG22-SG23-SG24
SG24	- C	9999 -	DLI-MOA-PIA-DTM-SG26
MOA	- C	5 -	Monetary amount

Function:

To specify a monetary amount.

		EDIFACT	GS1	*	Description
C516	MONETARY AMOUNT	M	**M**		
5025	Monetary amount type code qualifier	M an..3	**M**		9 = Amount due/amount payable 12 = Amount remitted 52 = Discount amount 53 = Discount amount due 109 = Payment discount amount 143 = Transfer amount 203 = Line item amount
5004	Monetary amount	C n..35	**R**		
6345	Currency identification code	C an..3	**O**		
6343	Currency type code qualifier	C an..3	**N**		
4405	Status description code	C an..3	**N**		

Segment Notes:

This segment is used to indicate the amount due and the amount remitted for the line item identified in the DLI segment for the current document.

Example:
MOA+12:4500'
MOA+9:52000'

5. Segments Layout

Segment number: 71

SG4	- M	9999 -	LIN-DTM-BUS-MOA-SG5-SG6-SG7-SG10
SG10	- M	99999 -	SEQ-DTM-BUS-FII-SG11-SG12-SG13-SG14-SG15-SG16-SG17-SG20
SG20	- C	1 -	PRC-FTX-SG21-SG27
SG21	- C	9999 -	DOC-MOA-DTM-RFF-NAD-SG22-SG23-SG24
SG24	- C	9999 -	DLI-MOA-PIA-DTM-SG26
PIA	- C	5 -	Additional product id

Function:

To specify additional or substitutional item identification codes.

		EDIFACT	GS1	*	Description
4347	Product identifier code qualifier	M an..3	**M**	*	5 = Product identification
C212	ITEM NUMBER IDENTIFICATION	M	**M**		
7140	Item identifier	C an..35	**R**		Number of the article for which the adjustment details are provided.
7143	Item type identification code	C an..3	**R**		AC = HIBC (Health Industry Bar Code) SRV = GS1 Global Trade Item Number IB = ISBN (International Standard Book Number) IN = Buyer's item number SA = Supplier's article number
1131	Code list identification code	C an..17	**O**		
3055	Code list responsible agency code	C an..3	**D**		9 = GS1 91 = Assigned by supplier or supplier's agent 92 = Assigned by buyer or buyer's agent
C212	ITEM NUMBER IDENTIFICATION	C	**O**		
7140	Item identifier	C an..35	**R**		
7143	Item type identification code	C an..3	**R**		
1131	Code list identification code	C an..17	**O**		
3055	Code list responsible agency code	C an..3	**D**		
C212	ITEM NUMBER IDENTIFICATION	C	**O**		
7140	Item identifier	C an..35	**R**		
7143	Item type identification code	C an..3	**R**		
1131	Code list identification code	C an..17	**O**		
3055	Code list responsible agency code	C an..3	**D**		
C212	ITEM NUMBER IDENTIFICATION	C	**O**		
7140	Item identifier	C an..35	**R**		
7143	Item type identification code	C an..3	**R**		
1131	Code list identification code	C an..17	**O**		
3055	Code list responsible agency code	C an..3	**D**		

5. Segments Layout

Segment number: 71

		EDIFACT	GS1	*	Description
C212	ITEM NUMBER IDENTIFICATION	C	**O**		
7140	Item identifier	C an..35	**R**		
7143	Item type identification code	C an..3	**R**		
1131	Code list identification code	C an..17	**O**		
3055	Code list responsible agency code	C an..3	**D**		

Segment Notes:

This segment is used to provide the product identification of the line item detailed in the DLI segment for the current document.

Example:
PIA+5+3323456007803:SRV'

5. Segments Layout

Segment number: 72

SG4	- M	9999 -	LIN-DTM-BUS-MOA-SG5-SG6-SG7-SG10
SG10	- M	99999 -	SEQ-DTM-BUS-FII-SG11-SG12-SG13-SG14-SG15-SG16-SG17-SG20
SG20	- C	1 -	PRC-FTX-SG21-SG27
SG21	- C	9999 -	DOC-MOA-DTM-RFF-NAD-SG22-SG23-SG24
SG24	- C	9999 -	DLI-MOA-PIA-DTM-SG26
DTM	- C	5 -	Date/time/period

Function:

To specify date, and/or time, or period.

		EDIFACT	GS1	*	Description
C507	DATE/TIME/PERIOD	M	**M**		
2005	Date or time or period function code qualifier	M an..3	**M**		2 = Delivery date/time, requested 35 = Delivery date/time, actual 36 = Expiry date 50 = Goods receipt date/time 55 = Confirmed date/time 61 = Cancel if not delivered by this date 147 = Expiry date of export licence 195 = Expiry date of import licence
2380	Date or time or period value	C an..35	**R**		
2379	Date or time or period format code	C an..3	**R**		102 = CCYYMMDD

Segment Notes:

This segment is used to specify any dates which are relevant to the current line item.

Example:
DTM+2:20020605:102'
DTM+35:20020612:102'
Delivery of the current line item was requested on the 5th of June 2002 but the actual delivery only took place on the 12th of June 2002.

5. Segments Layout

Segment number: 73

SG4	- M	9999	- LIN-DTM-BUS-MOA-SG5-SG6-SG7-SG10
SG10	- M	99999	- SEQ-DTM-BUS-FII-SG11-SG12-SG13-SG14-SG15-SG16-SG17-SG20
SG20	- C	1	- PRC-FTX-SG21-SG27
SG21	- C	9999	- DOC-MOA-DTM-RFF-NAD-SG22-SG23-SG24
SG24	- C	9999	- DLI-MOA-PIA-DTM-SG26
SG26	- C	10	- AJT-MOA-RFF
AJT	- M	1	- Adjustment details

Function:

To identify the reason for an adjustment.

		EDIFACT	GS1	*	Description
4465	Adjustment reason description code	M an..3	**M**		1 = Agreed settlement 2 = Below specification goods 3 = Damaged goods 4 = Short delivery 5 = Price query 6 = Proof of delivery required 9 = Invoice error 14 = Wrong delivery 17 = Transport damage 20 = Discount for late delivery 32 = Goods not delivered
1082	Line item identifier	C an..6	**N**		

Segment Notes:

This segment is used to indicate the reason for an adjustment to the current line identified in the DLI segment.

Example:
AJT+3'

5. Segments Layout

Segment number: 74

SG4	- M	9999 -	LIN-DTM-BUS-MOA-SG5-SG6-SG7-SG10
SG10	- M	99999 -	SEQ-DTM-BUS-FII-SG11-SG12-SG13-SG14-SG15-SG16-SG17-SG20
SG20	- C	1 -	PRC-FTX-SG21-SG27
SG21	- C	9999 -	DOC-MOA-DTM-RFF-NAD-SG22-SG23-SG24
SG24	- C	9999 -	DLI-MOA-PIA-DTM-SG26
SG26	- C	10 -	AJT-MOA-RFF
MOA	- C	1 -	Monetary amount

Function:

To specify a monetary amount.

		EDIFACT	GS1	*	Description
C516	MONETARY AMOUNT	M	**M**		
5025	Monetary amount type code qualifier	M an..3	**M**	*	5 = Adjusted amount 165 = Adjustment amount
5004	Monetary amount	C n..35	**R**		
6345	Currency identification code	C an..3	**N**		
6343	Currency type code qualifier	C an..3	**N**		
4405	Status description code	C an..3	**N**		

Segment Notes:

This segment is used to indicate the value of the adjusted amount for the current line item.
Adjustment amounts may be provided for information purposes only, e.g. not for calculation. The adjustment amount will not necessarily equal the difference between the amount due and the amount remitted.
The adjustment amount will always be expressed in terms of the remittance/payment currency.

Example:
MOA+5:4920'

5. Segments Layout

Segment number: 75

SG4	- M	9999 -	LIN-DTM-BUS-MOA-SG5-SG6-SG7-SG10
SG10	- M	99999 -	SEQ-DTM-BUS-FII-SG11-SG12-SG13-SG14-SG15-SG16-SG17-SG20
SG20	- C	1 -	PRC-FTX-SG21-SG27
SG21	- C	9999 -	DOC-MOA-DTM-RFF-NAD-SG22-SG23-SG24
SG24	- C	9999 -	DLI-MOA-PIA-DTM-SG26
SG26	- C	10 -	AJT-MOA-RFF
RFF	- C	1 -	Reference

Function:

To specify a reference.

		EDIFACT	GS1	*	Description
C506	REFERENCE	M	**M**		
1153	Reference code qualifier	M an..3	**M**		ON = Order number (buyer) PL = Price list number PP = Purchase order change number POR = Purchase order response number VN = Order number (supplier)
1154	Reference identifier	C an..70	**R**		
1156	Document line identifier	C an..6	**O**		
4000	Reference version identifier	C an..35	**N**		
1060	Revision identifier	C an..6	**N**		

Segment Notes:

This segment is used to specify any references associated with the adjustment amounts for the current line item.

Example:
RFF+PP:6522'

5. Segments Layout

Segment number: 76

SG4	- M	9999	-	LIN-DTM-BUS-MOA-SG5-SG6-SG7-SG10
SG10	- M	99999	-	SEQ-DTM-BUS-FII-SG11-SG12-SG13-SG14-SG15-SG16-SG17-SG20
SG20	- C	1	-	PRC-FTX-SG21-SG27
SG27	- C	1	-	GIS-MOA
GIS	- M	1	-	General indicator

Function:

To transmit a processing indicator.

Notes:
1. This segment will be removed effective with directory D.02B.

		EDIFACT	GS1	*	Description
C529	PROCESSING INDICATOR	M	**M**		
7365	Processing indicator description code	M an..3	**M**	*	37 = Complete information
1131	Code list identification code	C an..17	**N**		
3055	Code list responsible agency code	C an..3	**N**		
7187	Process type description code	C an..17	**N**		

Segment Notes:

This segment is used to indicate the end of the detail of payment.

Example:
GIS+37'

5. Segments Layout

Segment number: 77

SG4	- M	9999	-	LIN-DTM-BUS-MOA-SG5-SG6-SG7-SG10
SG10	- M	99999	-	SEQ-DTM-BUS-FII-SG11-SG12-SG13-SG14-SG15-SG16-SG17-SG20
SG20	- C	1	-	PRC-FTX-SG21-SG27
SG27	- C	1	-	GIS-MOA
MOA	- C	5	-	Monetary amount

Function:

To specify a monetary amount.

		EDIFACT	GS1	*	Description
C516	MONETARY AMOUNT	M	**M**		
5025	Monetary amount type code qualifier	M an..3	**M**		128 = Total amount
5004	Monetary amount	C n..35	**R**		
6345	Currency identification code	C an..3	**N**		
6343	Currency type code qualifier	C an..3	**N**		
4405	Status description code	C an..3	**N**		

Segment Notes:

This segment is used to indicate the total amount for level C for control purposes. The figure detailed here is simply an accumulation of the values specified in all MOA segments in level C regardless of the qualifiers used in DE 5025.

Example:
MOA+128:25601'

5. Segments Layout

Segment number: 78

CNT	- C	5 - Control total			
Function: To provide control total.					
		EDIFACT	GS1	*	Description
C270	CONTROL	M	**M**		
6069	Control total type code qualifier	M an..3	**M**		2 = Number of line items in message 40 = Total number of sequence details in message
6066	Control total value	M n..18	**M**		
6411	Measurement unit code	C an..3	**O**		

Segment Notes:

This segment is used to provide application data for message control purposes.

Example:
CNT+2:26'

5. Segments Layout

Segment number: 79

SG28	- C	5 -	AUT-DTM
AUT	- M	1 -	Authentication result

Function:

To specify results of the application of an authentication procedure.

		EDIFACT	GS1	*	Description
9280	Validation result value	M an..35	**M**		
9282	Validation key identifier	C an..35	**O**		This data element is used to identify the key which has been/is used to validate the contents of the message.

Segment Notes:

This segment is used to provide details of any authentication procedures which have been applied to the multiple credit advice. The use of this segment is, including any algorithms and calculation procedures, dependent on bilaterally agreed conditions between the message sender and receiver.

Example:
AUT+7761'

5. Segments Layout

Segment number: 80

SG28	- C	5 -	AUT-DTM
DTM	- C	1 -	Date/time/period

Function:

To specify date, and/or time, or period.

		EDIFACT	GS1	*	Description
C507	DATE/TIME/PERIOD	M	**M**		
2005	Date or time or period function code qualifier	M an..3	**M**	*	218 = Authentication/validation date/time
2380	Date or time or period value	C an..35	**R**		
2379	Date or time or period format code	C an..3	**R**		102 = CCYYMMDD

Segment Notes:

This segment is used to provide details related to the date and where necessary, the time, of the multiple credit advice validation.

Example:
DTM+218:200206011200:203'
The multiple payment order was validated at 12 noon on the 1st of June 2002.

5. Segments Layout

Segment number: 81

UNT - M 1 - Message trailer					
Function: To end and check the completeness of a message. Notes: 1. 0062, the value shall be identical to the value in 0062 in the corresponding UNH segment.					
		EDIFACT	GS1	*	Description
0074	Number of segments in a message	M n..10	**M**		The total number of segments in the message.
0062	Message reference number	M an..14	**M**		The message reference numbered detailed here should equal the one specified in the UNH segment.
Segment Notes: This segment is a mandatory UN/EDIFACT segment. It must always be the last segment in the message. Example: UNT+79+ME0000001'					

5. Segments Layout

Segment number: 82

UNZ - M 1 - Interchange trailer					
Function: To end and check the completeness of an interchange. Notes: 1. 0020, the value shall be identical to the value in 0020 in the corresponding UNB segment.					
		EDIFACT	GS1	*	Description
0036	Interchange control count	M n..6	**M**		Number of messages or functional groups within an interchange.
0020	Interchange control reference	M an..14	**M**		Identical to DE 0020 in UNB segment.
Segment Notes: This segment is used to provide the trailer of an interchange. DE 0036: If functional groups are used, this is the number of functional groups within the interchange. If functional groups are not used, this is the number of messages within the interchange. UNZ+5+12345555'					

Example 1

The following is an example of a simple credit advice message sent by the bank Kredit Bank to the receiving party identified by GLN 5422334423459, which provides details of a simple credit advice which has been made to the beneficiary, Mr J. Holmes.

The message, identified by the number 5841, which was generated on the 8th of August 2002, provides details of a credit totalling 50000 Euros (EUR). The message sender and the bank of the beneficiary are identified using the ISO bank identification codes. The message provides details related to three invoices identified by the numbers 43534, 52000, and 52447.

UNH+ME00000001+CREMUL:D:01B:UN:EAN003'	Start level A - message header
BGM+338+5841+9'	Message is advice of items which have been booked
DTM+137:20020808:102'	Message date 8th August 2002
FII+MS++KREDBEBB:25:5'	Identification message sending bank
NAD+MR+5422331123459::9'	Identification of message recipient party
LIN+1'	Start level B
DTM+209:20020808:102'	Value date for the credit is 8th August 2002
MOA+60:49360:EUR'	Posted amount = 49360 Euros
MOA+XB5:50000:EUR'	Information amount = 50000 Euros (amount before deduction of charges)
RFF+ACK:68132'	Bank reference 68132 identifies level B of this message
FII+BF+994-3277711+KREDBEBB:25:5'	Beneficiary bank details
FCA+13'	All charges to be borne by the payee
MOA+23:640:EUR'	Charge amount = 640 Euros
SEQ++1'	Start level C
FII+BF+994-3277711:N GEISS+KREDBEBB:25:5'	Identification of the beneficiary
RFF+AIK:481'	Bank reference 481 identifies level C of this message
MOA+60:49360:EUR'	Posted amount = 49360 Euros
MOA+XB5:50000:EUR'	Information amount = 50000 Euros (amount before deduction of charges)
NAD+OY+5422331123459::9'	Identification of ordering customer using GLN 5422331123459
PRC+8'	Structured information follows
DOC+380+43534'	Commercial invoice number 43534
DTM+137:20010710:102'	Invoice date 10th July 2001
DOC+380+52000'	Commercial invoice number 52000

DTM+137:20010713:102'	Invoice date 13th July 2001
DOC+380+52447'	Commercial invoice number 52447
DTM+137:20010713:102'	Invoice date 13th July 2001
GIS+37'	End of credit details
MOA+139:50000'	Control total of value of message
UNT+29+ME0000001'	Total number of segments in the message equals 29

Example 2

The following is an example of a multiple credit advice message sent by the Dresdner bank providing details of an extended credit advice for the beneficiary identified by GLN 5312345123456.

The message, identified by the number 608, which was generated on the 28th of June 2002, provides details of credits totalling 8080 Euros (EUR) which will be posted to the beneficiary's account on the 29th of June. The details of the message indicate to the beneficiary that although the credit amount equals 8080 EUR the original invoiced total was 8500 EUR. The reasons for the difference between the invoice value and payment value is detailed in the remittance data contained in the message.

The message sender and the bank of the beneficiary are identified using the ISO bank identification codes.

Invoice Number	Invoice Value	Invoice Date	Amount Remitted	Adjustment Value	References
434	120	2002/05/10	120		Order No: 664
520	160	2002/05/13	160		Order No: 357
447	6420	2002/05/13	6000	420	Order No: 734 Delivery Note No: 187-A1
466	1800	2002/05/13	1800	1800	

UNH+ME00000001+CREMUL:D:01B:UN:EAN003'	Start level A - message header
BGM+141+608+9'	Message is advice of items which are to be booked
DTM+137:20022806:102'	Message date 28th June 2002
FII+MS++DRESDEFF:25:5'	Identification message sending bank
NAD+MR+5312345123456::9'	Identification of message recipient party
LIN+1'	Start level B
DTM+202:20020629:102'	Posting will take place on 29th of June 2002
RFF+ACK:632'	Bank reference 632 identifies level B of this

	message
MOA+60:8080:EUR'	Posted amount = 8080 EUR
FII+BF+994-32366211+KREDBEBB:25:5'	Beneficiary bank details
SEQ++1'	Start level C
FII+BF+994-32366211:N GEISS+KREDBEBB:25:5'	Identification of the beneficiary
RFF+AIK:491'	Bank reference 491 identifies level C of this message
MOA+60:8080:EUR'	Posted amount = 8080 Euros
MOA+XB5:8500:EUR'	Information amount = 8500 Euros (amount before deduction of charges)
NAD+OY+++ABC EXPRESS COURIERS'	Indication of the Ordering Customer
PRC+8'	Structured information follows
DOC+380+434'	Commercial invoice number 434
MOA+9:120:EUR'	Amount due = 120 EUR
MOA+11:120:EUR'	Amount paid = 120 EUR
DTM+137:20020510:102'	Invoice date 10th May 2002
RFF+ON:664'	Order number 664
DOC+380+520'	Commercial invoice number 520
MOA+9:160:EUR'	Amount due = 160 EUR
MOA+11:160:EUR'	Amount paid = 160 EUR
DTM+137:20020513:102'	Invoice date 13th May 2002
RFF+ON:357'	Order number 357
DOC+380+447'	Commercial invoice number 447
MOA+9:6420:EUR'	Amount due = 6420 EUR
MOA+12:6000:EUR'	Amount paid = 6000 EUR
DTM+137:20020513:102'	Invoice date 13th May 2002
RFF+ON:734'	Order number 734
AJT+3'	Adjustments due to damaged goods
MOA+5:420:EUR'	Adjusted amount = 420 EUR
RFF+DQ:187-A1'	Delivery note number 187-A1
DOC+380+466'	Commercial invoice number 466
MOA+9:1800:EUR'	Amount due = 1800 EUR
MOA+12:1800:EUR'	Amount paid = 1800 EUR
DTM+137:20020513:102'	Invoice date 13th May 2002

6. Examples

GIS+37'	End of credit details
MOA+139:8080'	Control total value of message
UNT+42+ME0000001'	Total number of segments in the message equals 42

Note :
The EDI interchange will include the UNB..UNZ segments and, if applicable, the UNG..UNE segments. (See part 1 section 5.7).