EANCOM® 2002 S4

MSCONS

Metered services consumption report message

Edition 2016 Upd. 2021

1. Introduction 2
2. Message Structure Chart 3
3. Branching Diagram 4
4. Segments Description 8
5. Segments Layout 12
6. Example(s) 55

1. Introduction

Status

MESSAGE TYPE	: MSCONS
REFERENCE DIRECTORY	: D.01B
EANCOM® SUBSET VERSION	: 004

Definition

A Metered Services Consumption Report is a communication between trading parties, or their agents, providing consumption and where required associated technical information at a location(s) for a product(s) or service(s) where the supply is recorded using a meter(s).

Principles

- At least one delivery party (premise) shall be identified per message.
- Each Metered Services Consumption Report will define the period of time for which the details contained are valid.
- A Metered Services Consumption Report may be used to provide consumption information which may directly relate to other business functions, e.g. invoicing or process control.
- A Metered Services Consumption Report may be sent by the buyer or the seller to the other party.
- Metered Services Consumption Reports will be provided for premises as defined by trading partners.
- Locations, products and/or services, and meters shall be identified where ever possible within the report using the EAN.UCC numbering system to facilitate automatic processing.
- The Metered Services Consumption Report may be transmitted at any time and may be related directly to either a delivery(ies) and/or an invoice. A Metered Services Consumption Report when used to support the financial information contained in an invoice may only relate to one invoice. A Metered Services Consumption Report when used to indicate consumption or qualitative information may relate to one or many delivery parties (premises).

2. Message Structure Chart

UNA	1	C	1	- Service string advice
UNB	2	M	1	- Interchange header

Metered Services Consumption Report Heading Section

UNH	3	M	1	- Message header
BGM	4	M	1	- Beginning of message
DTM	5	M	9	- Date/time/period
SG1		C	9	- RFF-DTM
RFF	6	M	1	- Reference
DTM	7	C	9	- Date/time/period
SG2		C	99	- NAD-SG3-SG4
NAD	8	M	1	- Name and address
SG3		C	9	- RFF
RFF	9	M	1	- Reference
SG4		C	9	- CTA-COM
CTA	10	M	1	- Contact information
COM	11	C	9	- Communication contact

Metered Services Consumption Report Detail Section

UNS	12	M	1	- Section control
SG5		M	99999	- NAD-SG6
NAD	13	M	1	- Name and address
SG6		M	99999	- LOC-DTM-SG7-SG8-SG9
LOC	14	M	1	- Place/location identification
DTM	15	C	9	- Date/time/period
SG7		C	99	- RFF-DTM
RFF	16	M	1	- Reference
DTM	17	C	9	- Date/time/period
SG8		C	99	- CCI-DTM
CCI	18	M	1	- Characteristic/class id
DTM	19	C	99	- Date/time/period
SG9		C	99999	- LIN-PIA-IMD-PRI-NAD-MOA-SG10-SG11
LIN	20	M	1	- Line item
PIA	21	C	9	- Additional product id
IMD	22	C	9	- Item description
PRI	23	C	9	- Price details
NAD	24	C	9	- Name and address
MOA	25	C	9	- Monetary amount
SG10		M	9999	- QTY-DTM
QTY	26	M	1	- Quantity
DTM	27	C	9	- Date/time/period
SG11		C	99	- CCI-MEA-DTM
CCI	28	M	1	- Characteristic/class id
MEA	29	C	99	- Measurements
DTM	30	C	9	- Date/time/period

Metered Services Consumption Report Summary Section

CNT	31	C	99	- Control total
UNT	32	M	1	- Message trailer
UNZ	33	M	1	- Interchange trailer

3. Branching Diagram

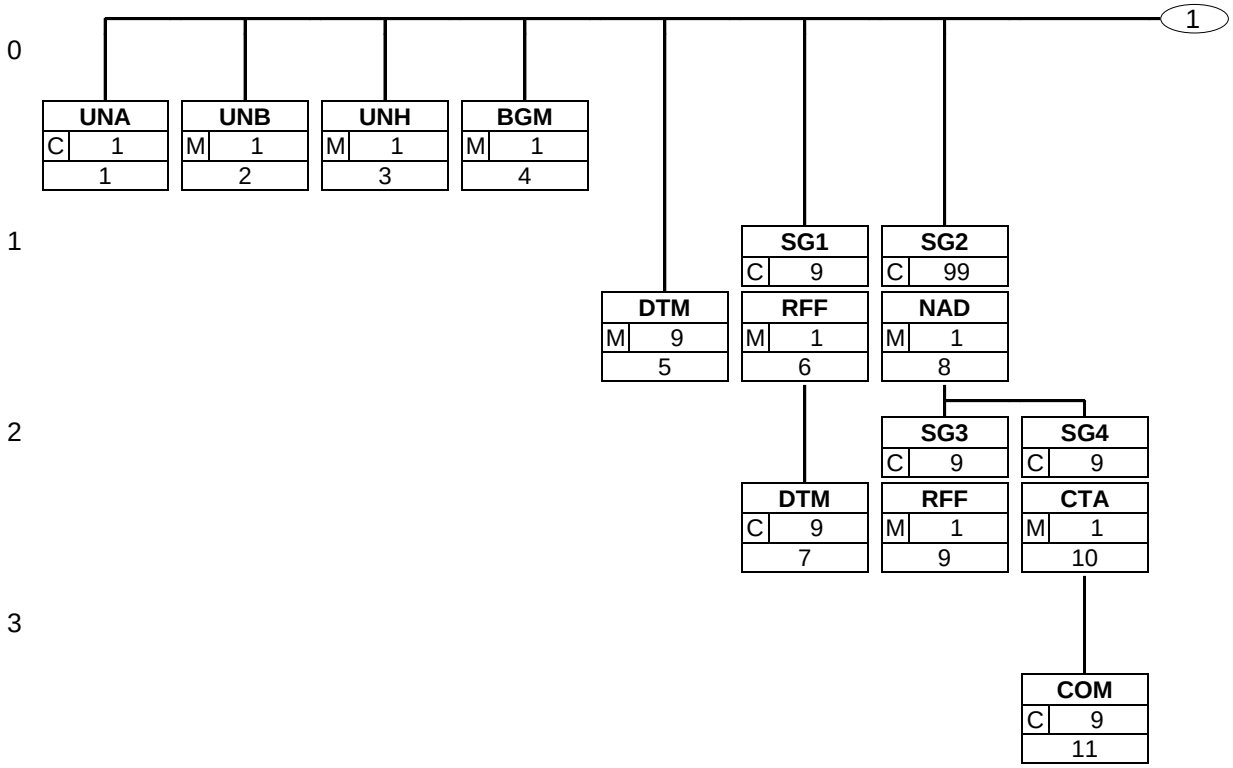

3. Branching Diagram

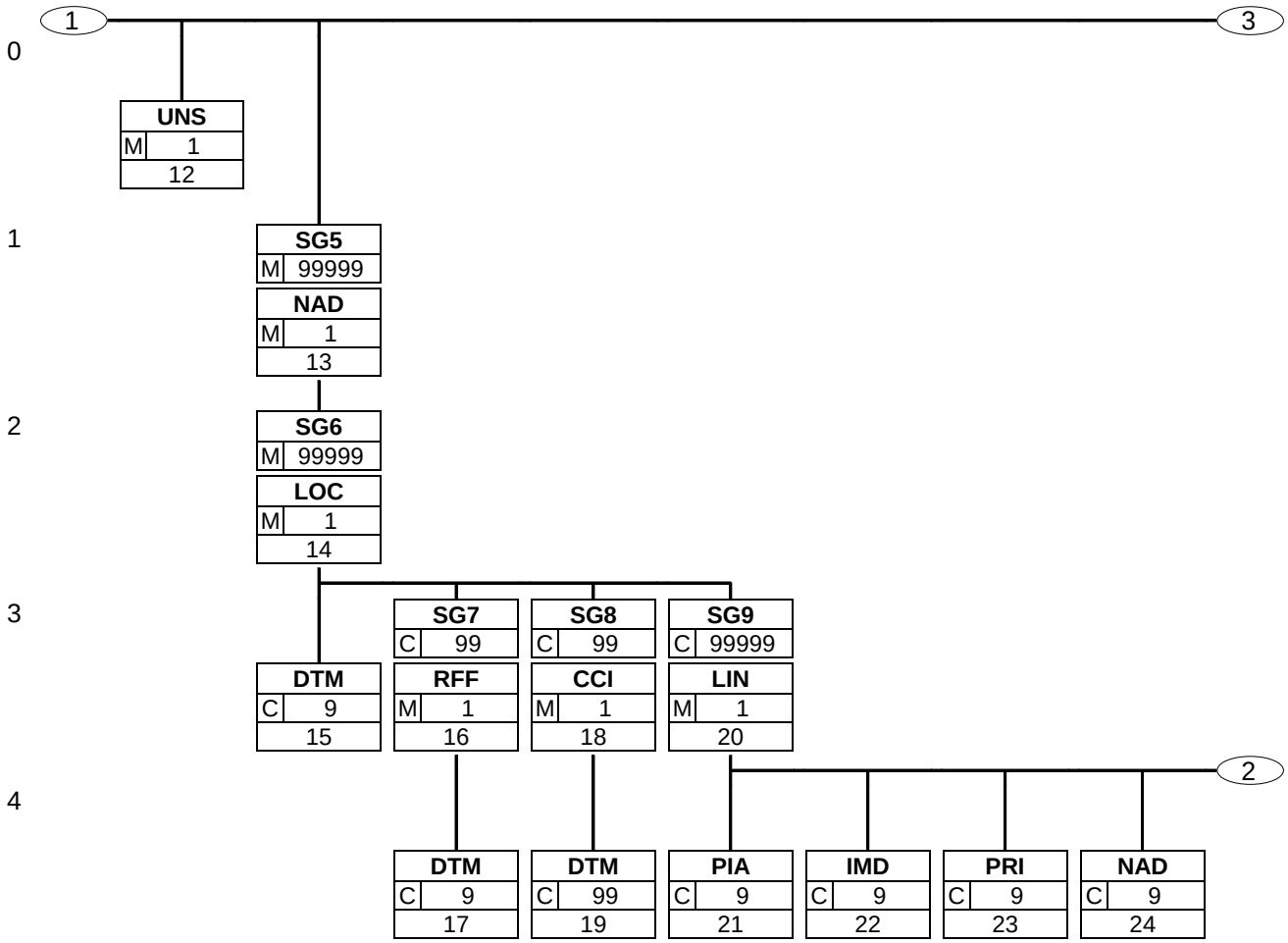

3. Branching Diagram

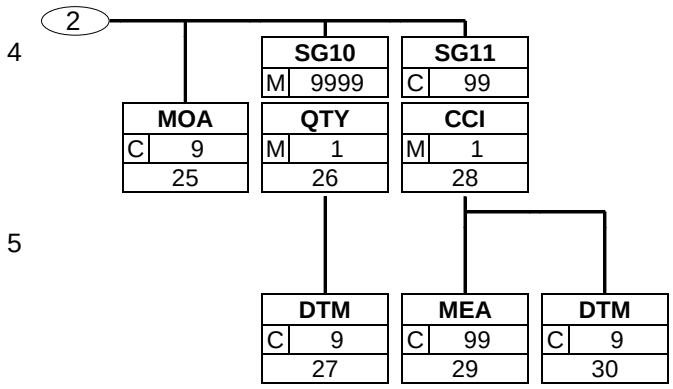

3. Branching Diagram

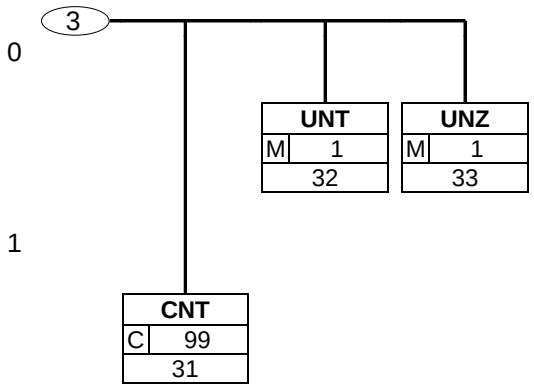

4. Segments Description

UNA - C 1 - Service string advice

This segment is used to inform the receiver of the interchange that a set of service string characters which are different to the default characters are being used.

UNB - M 1 - Interchange header

This segment is used to envelope the interchange, as well as to identify both, the party to whom the interchange is sent and the party who has sent the interchange. The principle of the UNB segment is the same as a physical envelope which covers one or more letters or documents, and which details, both the address where delivery is to take place and the address from where the envelope has come.

Metered Services Consumption Report Heading Section

UNH - M 1 - Message header

This segment is used to head, identify and specify a message.

BGM - M 1 - Beginning of message

This segment is used to indicate the type and function of a message and to transmit the identifying number.

DTM - M 9 - Date/time/period

This segment is used to specify the date of the metered services consumption report message.

SG1 - C 9 - **RFF-DTM**

A group of segments providing references and any applicable dates related to the whole message. These references may be overridden at detail level in segment group 7 when the same qualifiers are used.

RFF - M 1 - Reference

This segment is used to identify references which are valid for the complete metered services consumption report. References provided here may be overridden at detail level through the use of the RFF segment in group 7 when the same qualifiers are used.

DTM - C 9 - Date/time/period

This segment is used to specify dates relating to the references given in the previous RFF segment.

SG2 - C 99 - **NAD-SG3-SG4**

A group of segments identifying the parties involved in the transaction, reference numbers associated with the parties, and any contact points and numbers.

NAD - M 1 - Name and address

This segment is used to identify the parties involved in the metered services consumption report message. The identification of the buyer and supplier is mandatory in the metered services consumption report.

SG3 - C 9 - **RFF**

A segment group providing reference numbers related to the parties identified in the NAD segment.

RFF - M 1 - Reference

This segment is used to identify references related to the party detailed in the NAD segment.

SG4 - C 9 - **CTA-COM**

A group of segments giving contact details of the specific person or department within the party identified in the NAD segment.

CTA - M 1 - Contact information

This segment is used to identify departments and/or persons within the party specified in the NAD.

4. Segments Description

COM - C 9 - Communication contact

This segment is used to identify the communications number and the type of communications used for the contact identified in the CTA segment.

Metered Services Consumption Report Detail Section

UNS - M 1 - Section control

This segment is used to identify the break between the message header and message detail sections.

SG5 - M 99999 - **NAD-SG6**

A group of segments identifying the delivery party (premise) and the meter for which consumption is being reported. This segment group is the trigger segment group to the detail section of the message and must be included at least once.

NAD - M 1 - Name and address

This segment is used to identify the delivery party (premise) for which consumption information is being provided. For the purpose of this message a premise may be either a physical location where meters are found or an entity within an organisation (e.g. sales department) which issues credit or charge cards to their representatives for the procurement of metered products, i.e. telephone calls, gasoline products, etc.

SG6 - M 99999 - **LOC-DTM-SG7-SG8-SG9**

A group of segments identifying the meter being reported, the date of the meter read, associated references, the physical characteristics of the meter, and the product or service for which consumption information is being reported.

LOC - M 1 - Place/location identification

This segment is used to identify the location of a meter within the premise identified in the previous NAD segment. The location of a meter may be a fixed location identified by a Global Location Number GLN or an identity number assigned to a 'moving' meter, e.g. credit card number.

DTM - C 9 - Date/time/period

This segment is used to specify any dates associated with the meter identified in the LOC segment.

SG7 - C 99 - **RFF-DTM**

A group of segments for specifying any references and associated dates valid for the meter identified in the LOC segment.

RFF - M 1 - Reference

This segment is used to identify any references associated with the currently identified meter. References provided here which use the same qualifier as that used in the RFF segment in the heading section will override the reference provided in the heading section for this meter only.

DTM - C 9 - Date/time/period

This segment is used to specify dates relating to the references given in the previous RFF segment.

SG8 - C 99 - **CCI-DTM**

A group of segments used to provide characteristic information and associated dates for the current meter.

CCI - M 1 - Characteristic/class id

This segment is used to specify the characteristics of the currently identified meter or product supplied on the meter.

DTM - C 99 - Date/time/period

This segment is used to specify dates relating to the characteristics of the meter specified in the previous CCI segment.

4. Segments Description

SG9 - C 99999 - **LIN-PIA-IMD-PRI-NAD-MOA-SG10-SG11**

A group of segments providing details of the metered products or services, quantities, characteristics, and any associated dates.

LIN - M 1 - Line item

This segment is used to identify a product for which consumption or qualitative information is being provided.

PIA - C 9 - Additional product id

This segment is used to specify additional or substitutional item identification codes such as a buyer's or supplier's item number.

IMD - C 9 - Item description

This segment is used to describe the current line item.

PRI - C 9 - Price details

This segment specifies pricing information relevant to the current line item.

NAD - C 9 - Name and address

This segment is used to identify parties related to the current product or service, e.g. the seller (service station) of gasoline products, the party which accepts or receives a telephone call.

MOA - C 9 - Monetary amount

This segment is used to specify the monetary value of the current product or service, e.g. the total cost of long distance telephone calls.

SG10 - M 9999 - **QTY-DTM**

A group of segments providing details of the meter read, consumption, correction quantities, and any associated dates.

QTY - M 1 - Quantity

This segment is used to specify quantities related to the current line item.

DTM - C 9 - Date/time/period

This segment is used to specify any dates and or times related to the quantity specified in the previous QTY segment.

SG11 - C 99 - **CCI-MEA-DTM**

A group of segments providing characteristic details, measurements, and dates related to the details for the currently identified line item.

CCI - M 1 - Characteristic/class id

This segment is used to specify the characteristics of the current line item, the currently identified meter or product supplied on the meter.

MEA - C 99 - Measurements

This segment is used to specify any measurements related to the currently identified product characteristic class and to provide measurements relevant to the characteristics provided for all the reported services (products) in one location.

DTM - C 9 - Date/time/period

This segment is used to specify any dates and or times related to the measurements or meter characteristics specified in the current line item characteristics.

Metered Services Consumption Report Summary Section

CNT - C 99 - Control total

This is used to provide message control information for checking on the message receivers in-house system.

4. Segments Description

UNT - M 1 - Message trailer

This segment is a mandatory UN/EDIFACT segment. It must always be the last segment in the message.

UNZ - M 1 - Interchange trailer

This segment is used to provide the trailer of an interchange.

5. Segments Layout

This section describes each segment used in the EANCOM® Metered services consumption report message. The original EDIFACT segment layout is listed. The appropriate comments relevant to the EANCOM® subset are indicated.

Notes:

1. The segments are presented in the sequence in which they appear in the message. The segment or segment group tag is followed by the (M)andatory / (C)onditional indicator, the maximum number of occurrences and the segment description.

2. Reading from left to right, in column one, the data element tags and descriptions are shown, followed by in the second column the EDIFACT status (M or C), the field format, and the picture of the data elements. These first pieces of information constitute the original EDIFACT segment layout.

   Following the EDIFACT information, EANCOM® specific information is provided in the third, fourth, and fifth columns. In the third column a status indicator for the use of (C)onditional EDIFACT data elements (see 2.1 through 2.3 below), in the fourth column the restricted indicator (see point 3 on the following page), and in the fifth column notes and code values used for specific data elements in the message.

2.1 (M)andatory data elements in EDIFACT segments retain their status in EANCOM®.

2.2 Additionally, there are five types of status for data elements with a (C)onditional EDIFACT status, whether for simple, component or composite data elements. These are listed below and can be identified when relevant by the following abbreviations:

- REQUIRED	**R**	Indicates that the entity is required and must be sent.
- ADVISED	**A**	Indicates that the entity is advised or recommended.
- DEPENDENT	**D**	Indicates that the entity must be sent in certain conditions, as defined by the relevant explanatory note.
- OPTIONAL	**O**	Indicates that the entity is optional and may be sent at the discretion of the user.
- NOT USED	**N**	Indicates that the entity is not used and should be omitted.

2.3 If a composite is flagged as **N, NOT USED**, all data elements within that composite will have blank status indicators assigned to them.

3. Status indicators detailed in the fourth column which directly relate to the code values detailed in the fifth **column** may have two values:

- RESTRICTED	*****	A data element marked with an asterisk (*) in the fourth column indicates that the listed codes in column five are the only codes available for use with this data element, in this segment, in this message.
- OPEN		All data elements where coded representation of data is possible and a restricted set of code values is not indicated are open (no asterisk in fourth column). The available codes are listed in the EANCOM® Data Elements and Code Sets Directory. Code values may be given as examples or there may be a note on the format or type of code to be used.

4. Different colours are used for the code values in the segment details: restricted codes are in red and open codes in blue.

5. Segments Layout

Segment number: 1

UNA - C 1 - Service string advice

Function:

The service string advice shall begin with the upper case characters UNA immediately followed by six characters in the order shown below. The space character shall not be used in positions 010, 020, 040, 050 or 060. The same character shall not be used in more than one position of the UNA.

		EDIFACT	GS1	*	Description
UNA1	Component data element separator	M an1	**M**	*	Used as a separator between component data elements contained within a composite data element (default value: ":")
UNA2	Data element separator	M an1	**M**	*	Used to separate two simple or composite data elements (default value: "+")
UNA3	Decimal mark	M an1	**M**	*	Used to indicate the character used for decimal notation (default value:".")
UNA4	Release character	M an1	**M**	*	Used to restore any service character to its original specification (value: "?").
UNA5	Repetition separator	M an1	**M**	*	Used to indicate the character used for repetition separation (value: " * ").
UNA6	Segment terminator	M an1	**M**	*	Used to indicate the end of segment data (default value: " ' ")

Segment Notes:

This segment is used to inform the receiver of the interchange that a set of service string characters which are different to the default characters are being used.
When using the default set of service characters, the UNA segment need not be sent. If it is sent, it must immediately precede the UNB segment and contain the four service string characters (positions UNA1, UNA2, UNA4 and UNA6) selected by the interchange sender.
Regardless of whether or not all of the service string characters are being changed every data element within this segment must be filled, (i.e., if some default values are being used with user defined ones, both the default and user defined values must be specified).
When expressing the service string characters in the UNA segment, it is not necessary to include any element separators.
The use of the UNA segment is required when using a character set other than level A.
UNA:+.?*'

5. Segments Layout

Segment number: 2

UNB - M 1 - Interchange header					
Function: To identify an interchange. Notes: 1. S001/0002, shall be '4' to indicate this version of the syntax. 2. The combination of the values carried in data elements S002, S003 and 0020 shall be used to identify uniquely the interchange, for the purpose of acknowledgement.					
		EDIFACT	GS1	*	Description
S001	SYNTAX IDENTIFIER	M	**M**		See Part I chapter 5.2.7 and segment notes.
0001	Syntax identifier	M a4	**M**	*	UNOA = UN/ECE level A UNOB = UN/ECE level B UNOC = UN/ECE level C UNOD = UN/ECE level D UNOE = UN/ECE level E UNOF = UN/ECE level F UNOG = UN/ECE level G UNOH = UN/ECE level H UNOI = UN/ECE level I UNOJ = UN/ECE level J UNOK = UN/ECE level K UNOW = UN/ECE level W UNOX = UN/ECE level X UNOY = UN/ECE level Y
0002	Syntax version number	M an1	**M**	*	4 = Version 4
0080	Service code list directory version number	C an..6	**N**		
0133	Character encoding, coded	C an..3	**N**		
S002	INTERCHANGE SENDER	M	**M**		
0004	Interchange sender identification	M an..35	**M**		GLN (n13)
0007	Identification code qualifier	C an..4	**R**	*	14 = GS1
0008	Interchange sender internal identification	C an..35	**O**		
0042	Interchange sender internal sub-identification	C an..35	**N**		
S003	INTERCHANGE RECIPIENT	M	**M**		
0010	Interchange recipient identification	M an..35	**M**		GLN (n13)
0007	Identification code qualifier	C an..4	**R**	*	14 = GS1
0014	Interchange recipient internal identification	C an..35	**O**		
0046	Interchange recipient internal sub-identification	C an..35	**N**		
S004	DATE AND TIME OF PREPARATION	M	**M**		
0017	Date	M n8	**M**		CCYYMMDD
0019	Time	M n4	**M**		HHMM
0020	Interchange control reference	M an..14	**M**		Unique reference identifying the interchange. Created

5. Segments Layout

Segment number: 2

		EDIFACT	GS1	*	Description
					by the interchange sender.
S005	RECIPIENT REFERENCE/ PASSWORD DETAILS	C	**O**		
0022	Recipient reference/password	M an..14	**M**		
0025	Recipient reference/password qualifier	C an2	**O**		
0026	Application reference	C an..14	**O**		Message identification if the interchange contains only one type of message.
0029	Processing priority code	C a1	**O**		A = Highest priority
0031	Acknowledgement request	C n1	**O**		1 = Requested
0032	Interchange agreement identifier	C an..35	**O**	*	EANCOM.....
0035	Test indicator	C n1	**O**		1 = Interchange is a test

Segment Notes:

This segment is used to envelope the interchange, as well as to identify both, the party to whom the interchange is sent and the party who has sent the interchange. The principle of the UNB segment is the same as a physical envelope which covers one or more letters or documents, and which details, both the address where delivery is to take place and the address from where the envelope has come.
S001: The character encoding specified in basic code table of ISO/IEC 646 (7-bit coded character set for information interchange) shall be used for the interchange service string advice (if used) and up to and including the composite data element S001 'Syntax identifier' in the interchange header. The character repertoire used for the characters in an interchange shall be identified from the code value of data element 0001 in S001 'Syntax identifier' in the interchange header. The character repertoire identified does not apply to objects and/or encrypted data.
The default encoding technique for a particular repertoire shall be the encoding technique defined by its associated character set specification.
DE 0001: The recommended (default) character set for use in EANCOM® for international exchanges is character set A (UNOA). Should users wish to use character sets other than A, an agreement on which set to use should be reached on a bilateral basis before communications begin.
DE 0004, 0008, 0010 and 0014: Within EANCOM® the use of the Global Location Number (GLN) is recommended for the identification of the interchange sender and recipient.
DE 0008: Identification (e.g. a division) specified by the sender of the interchange, to be included if agreed, by the recipient in response interchanges, to facilitate internal routing.
DE 0014: The address for routing, provided beforehand by the interchange recipient, is used by the interchange sender to inform the recipient of the internal address, within the latter's systems, to which the interchange should be routed. It is recommended that the GLN be used for this purpose.
DE 0007: Identification (e.g. a division) specified by the recipient of the interchange, to be included if agreed, by the sender in response interchanges, to facilitate internal routing.
DE S004: The date and time specified in this composite should be the date and time at which the interchange sender prepared the interchange. This date and time may not necessarily be the same as the date and time of contained messages.
DE 0020: The interchange control reference number is generated by the interchange sender and is used to identify uniquely each interchange. Should the interchange sender wish to re-use interchange control reference numbers, it is recommended that each number be preserved for at least a period of three months before being re-used. In order to guarantee uniqueness, the interchange control reference number should always be linked to the interchange sender's identification (DE 0004).
DE S005: The use of passwords must first be agreed bilaterally by the parties exchanging the interchange.
DE 0026: This data element is used to identify the application, on the interchange recipient's system, to which the interchange is directed. This data element may only be used if the interchange contains only one type of message, (e.g. only invoices). The reference used in this data element is assigned by the interchange sender.
DE 0031: This data element is used to indicate whether an acknowledgement to the interchange is required. The EANCOM® APERAK or CONTRL message should be used to provide acknowledgement of interchange receipt. In addition, the EANCOM® CONTRL message may be used to indicate when an interchange has been rejected

5. Segments Layout

Segment number: 2

due to syntax errors.
DE 0032: This data element is used to identify any underlying agreements which control the exchange of data. Within EANCOM® , the identity of such agreements must start with the letters 'EANCOM', the remaining characters within the data element being filled according to bilateral agreements.

UNB+UNOC:4+5412345678908:14+8798765432106:14+20020102:1000+12345555+++++EANCOMREF 52'

5. Segments Layout

Segment number: 3

UNH	- M	1 - Message header

Function:

To head, identify and specify a message.

Notes:
1. Data element S009/0057 is retained for upward compatibility. The use of S016 and/or S017 is encouraged in preference.
2. The combination of the values carried in data elements 0062 and S009 shall be used to identify uniquely the message within its group (if used) or if not used, within its interchange, for the purpose of acknowledgement.

		EDIFACT	GS1	*	Description
0062	Message reference number	M an..14	**M**		Senders unique message reference. Sequence number of messages in the interchange. DE 0062 in UNT will have the same value. Generated by the sender.
S009	MESSAGE IDENTIFIER	M	**M**		
0065	Message type	M an..6	**M**	*	MSCONS = Metered services consumption report message
0052	Message version number	M an..3	**M**	*	D = Draft version/UN/EDIFACT Directory
0054	Message release number	M an..3	**M**	*	01B = Release 2001 - B
0051	Controlling agency, coded	M an..3	**M**	*	UN = UN/CEFACT
0057	Association assigned code	C an..6	**R**	*	EAN004 = GS1 version control number (GS1 Permanent Code) Indicates that the message is the EANCOM version 004 of the Metered Services Consumption Report message.
0110	Code list directory version number	C an..6	**O**		This data element can be used to identify the codelist agreed by the interchange partners, e.g. EAN001 = EANCOM 2002 S4 codelist released on 01.12.2002 by GS1.
0113	Message type sub-function identification	C an..6	**N**		
0068	Common access reference	C an..35	**N**		
S010	STATUS OF THE TRANSFER	C	**N**		
0070	Sequence of transfers	M n..2			
0073	First and last transfer	C a1			
S016	MESSAGE SUBSET IDENTIFICATION	C	**N**		
0115	Message subset identification	M an..14			
0116	Message subset version number	C an..3			
0118	Message subset release number	C an..3			
0051	Controlling agency, coded	C an..3			
S017	MESSAGE IMPLEMENTATION GUIDELINE IDENTIFICATION	C	**N**		
0121	Message implementation guideline identification	M an..14			
0122	Message implementation	C an..3			

5. Segments Layout

Segment number: 3

		EDIFACT	GS1	*	Description
	guideline version number				
0124	Message implementation guideline release number	C an..3			
0051	Controlling agency, coded	C an..3			
S018	SCENARIO IDENTIFICATION	C	**N**		
0127	Scenario identification	M an..14			
0128	Scenario version number	C an..3			
0130	Scenario release number	C an..3			
0051	Controlling agency, coded	C an..3			

Segment Notes:

This segment is used to head, identify and specify a message.
DE's 0065, 0052, and 0054: Indicate that the message is a UNSM Metered Services Consumption Report based on the D.01B directory.

Example:
UNH+1+MSCONS:D:01B:UN:EAN004'

5. Segments Layout

Segment number: 4

BGM - M 1 - Beginning of message					
Function: To indicate the type and function of a message and to transmit the identifying number.					
		EDIFACT	GS1	*	Description
C002	DOCUMENT/MESSAGE NAME	C	**R**		
1001	Document name code	C an..3	**R**	*	739 = Metered services consumption report supporting an invoice 742 = Metered services consumption report It is of critical importance to use the appropriate document name qualifier relevant to the message. For application routing purposes users may decide which value to use in data element 1001. Code value 742 is used to provide metered services consumption and quality data for multiple premises in support of consumption related information. This consumption and quality information may be routed towards process control, energy management, or other technical systems. Code value 739 is used to provide metered services consumption data for a single premise and will be routed to financial systems.
1131	Code list identification code	C an..17	**N**		
3055	Code list responsible agency code	C an..3	**R**	*	9 = GS1
1000	Document name	C an..35	**O**		
C106	DOCUMENT/MESSAGE IDENTIFICATION	C	**R**		
1004	Document identifier	C an..35	**R**		Metered services consumption report number assigned by document sender. For global unique identification of documents Global Document Type Identifier (GDTI) is available.
1056	Version identifier	C an..9	**N**		
1060	Revision identifier	C an..6	**N**		
1225	Message function code	C an..3	**R**	*	5 = Replace 7 = Duplicate 9 = Original 31 = Copy The message function, coded is a critical data element in this segment. It applies to all data indicated in the message. The following definitions apply for the restricted codes: 5 = Replace - Cancel the original metered services consumption report and replace with this report (original report reference is specified in RFF SG1). 7 = Duplicate - Retransmission involving the same parties, on the specific request of the receiver. 9 = Original - An original transmission of a metered services consumption report. 31 = Copy - Copy of the metered services consumption report for a third party for information purposes.
4343	Response type code	C an..3	**N**		

5. Segments Layout

Segment number: 4

Segment Notes:

This segment is used to indicate the type and function of a message and to transmit the identifying number.

Example:
BGM+742::9+AW5235+9'

5. Segments Layout

Segment number: 5

DTM	- M	9 - Date/time/period			
Function: To specify date, and/or time, or period.					
		EDIFACT	GS1	*	Description
C507	DATE/TIME/PERIOD	M	**M**		
2005	Date or time or period function code qualifier	M an..3	**M**	*	35 = Delivery date/time, actual 137 = Document/message date/time
2380	Date or time or period value	C an..35	**R**		
2379	Date or time or period format code	C an..3	**R**		102 = CCYYMMDD 203 = CCYYMMDDHHMM 718 = CCYYMMDD-CCYYMMDD

Segment Notes:

This segment is used to specify the date of the metered services consumption report message.
DE 2005: Identification of the 'Document/message date/time' (code value 137) is mandatory in an EANCOM message.

Example:
DTM+137:20020212:102'
DTM+35:2002021220020312:718'
This example relates to a service supplied during the period from the 12th February 2002 to the 12th March 2002.

5. Segments Layout

Segment number: 6

SG1	- C	9 -	RFF-DTM
RFF	- M	1 -	Reference

Function:

To specify a reference.

		EDIFACT	GS1	*	Description
C506	REFERENCE	M	**M**		
1153	Reference code qualifier	M an..3	**M**		AXC = Metered services consumption report number CT = Contract number DQ = Delivery note number IV = Invoice number ON = Order number (buyer)
1154	Reference identifier	C an..70	**R**		
1156	Document line identifier	C an..6	**N**		
4000	Reference version identifier	C an..35	**N**		
1060	Revision identifier	C an..6	**N**		

Segment Notes:

This segment is used to identify references which are valid for the complete metered services consumption report. References provided here may be overridden at detail level through the use of the RFF segment in group 7 when the same qualifiers are used.

Example:
RFF+CT:1024511'

5. Segments Layout

Segment number: 7

SG1	- C	9 -	RFF-DTM
DTM	- C	9 -	Date/time/period

Function:

To specify date, and/or time, or period.

		EDIFACT	GS1	*	Description
C507	DATE/TIME/PERIOD	M	**M**		
2005	Date or time or period function code qualifier	M an..3	**M**	*	171 = Reference date/time
2380	Date or time or period value	C an..35	**R**		
2379	Date or time or period format code	C an..3	**R**		102 = CCYYMMDD 203 = CCYYMMDDHHMM

Segment Notes:

This segment is used to specify dates relating to the references given in the previous RFF segment.

Example:
DTM+171:20020804:102'

5. Segments Layout

Segment number: 8

SG2	- C	99 -	NAD-SG3-SG4
NAD	- M	1 -	Name and address

Function:

To specify the name/address and their related function, either by C082 only and/or unstructured by C058 or structured by C080 thru 3207.

		EDIFACT	GS1	*	Description
3035	Party function code qualifier	M an..3	**M**		BY = Buyer II = Issuer of invoice IV = Invoicee SR = Supplier's agent/representative SU = Supplier
C082	PARTY IDENTIFICATION DETAILS	C	**A**		
3039	Party identifier	M an..35	**M**		For identification of parties it is recommended to use GLN - Format n13.
1131	Code list identification code	C an..17	**N**		
3055	Code list responsible agency code	C an..3	**R**	*	9 = GS1
C058	NAME AND ADDRESS	C	**O**		This composite may only be used to fulfill the requirements of directive 2003/58/EC, article 4.
3124	Name and address description	M an..35	**M**		
3124	Name and address description	C an..35	**N**		
3124	Name and address description	C an..35	**N**		
3124	Name and address description	C an..35	**N**		
3124	Name and address description	C an..35	**C**		
C080	PARTY NAME	C	**D**		
3036	Party name	M an..35	**M**		Party Name in clear text.
3036	Party name	C an..35	**O**		
3036	Party name	C an..35	**O**		
3036	Party name	C an..35	**O**		
3036	Party name	C an..35	**O**		
3045	Party name format code	C an..3	**O**		
C059	STREET	C	**D**		
3042	Street and number or post office box identifier	M an..35	**M**		Building Name/Number and Street Name
3042	Street and number or post office box identifier	C an..35	**O**		
3042	Street and number or post office box identifier	C an..35	**O**		
3042	Street and number or post office box identifier	C an..35	**O**		
3164	City name	C an..35	**D**		City/Town name, clear text
C819	COUNTRY SUB-ENTITY DETAILS	C	**D**		
3229	Country sub-entity name code	C an..9	**O**		

5. Segments Layout

Segment number: 8

		EDIFACT	GS1	*	Description
1131	Code list identification code	C an..17	**O**		
3055	Code list responsible agency code	C an..3	**O**		
3228	Country sub-entity name	C an..70	**O**		County/State, clear text.
3251	Postal identification code	C an..17	**D**		Postal Code
3207	Country name code	C an..3	**D**		ISO 3166 two alpha code

Segment Notes:

This segment is used to identify the parties involved in the metered services consumption report message. The identification of the buyer and supplier is mandatory in the metered services consumption report.

Example:
NAD+BY+5071615111110::9'
NAD+SU+5098765111111::9'

Dependency Notes:
The following composites and data elements are only used when a coded name and address can not be used.
The affected composites and data elements are as follows:
C080 - C059 - 3164 - C819 - 3251 - 3207

5. Segments Layout

Segment number: 9

SG2	- C	99	-	NAD-SG3-SG4
SG3	- C	9	-	RFF
RFF	- M	1	-	Reference

Function:

To specify a reference.

		EDIFACT	GS1	*	Description
C506	REFERENCE	M	**M**		
1153	Reference code qualifier	M an..3	**M**	*	GN = Government reference number VA = VAT registration number XA = Company/place registration number YC1 = Additional party identification (GS1 Temporary Code)
1154	Reference identifier	C an..70	**R**		
1156	Document line identifier	C an..6	**N**		
4000	Reference version identifier	C an..35	**N**		
1060	Revision identifier	C an..6	**N**		

Segment Notes:

This segment is used to identify references related to the party detailed in the NAD segment.

Example:
RFF+YC1:125'

5. Segments Layout

Segment number: 10

SG2	- C	99	-	NAD-SG3-SG4
SG4	- C	9	-	CTA-COM
CTA	- M	1	-	Contact information

Function:

To identify a person or a department to whom communication should be directed.

		EDIFACT	GS1	*	Description
3139	Contact function code	C an..3	**R**		IC = Information contact
C056	DEPARTMENT OR EMPLOYEE DETAILS	C	**O**		
3413	Department or employee name code	C an..17	**O**		
3412	Department or employee name	C an..35	**O**		

Segment Notes:

This segment is used to identify departments and/or persons within the party specified in the NAD.
The Global Location Number GLN - Format n13 - is particularly suitable for this purpose.

Example:
CTA+IC+:MARK CARTER'

5. Segments Layout

Segment number: 11

SG2	- C	99	-	NAD-SG3-SG4
SG4	- C	9	-	CTA-COM
COM	- C	9	-	Communication contact

Function:

To identify a communication number of a department or a person to whom communication should be directed.

		EDIFACT	GS1	*	Description
C076	COMMUNICATION CONTACT	M	**M**		
3148	Communication address identifier	M an..512	**M**		
3155	Communication address code qualifier	M an..3	**M**		AO = Uniform Resource Location (URL) EI = EDI EM = Electronic mail TE = Telephone

Segment Notes:

This segment is used to identify the communications number and the type of communications used for the contact identified in the CTA segment.

Example:
COM+003222271020:TE'

5. Segments Layout

Segment number: 12

UNS - M 1 - Section control				
Function: To separate header, detail and summary sections of a message. Notes: To be used by message designers only when required to avoid ambiguities.				
	EDIFACT	GS1	*	Description
0081 Section identification	M a1	**M**	*	D = Header/detail section separation
Segment Notes: This segment is used to identify the break between the message header and message detail sections. Example: UNS+D'				

5. Segments Layout

Segment number: 13

SG5	- M	99999	-	NAD-SG6
NAD	- M	1	-	Name and address

Function:

To specify the name/address and their related function, either by C082 only and/or unstructured by C058 or structured by C080 thru 3207.

		EDIFACT	GS1	*	Description
3035	Party function code qualifier	M an..3	**M**	*	DP = Delivery party
C082	PARTY IDENTIFICATION DETAILS	C	**A**		
3039	Party identifier	M an..35	**M**		For identification of parties it is recommended to use GLN - Format n13.
1131	Code list identification code	C an..17	**N**		
3055	Code list responsible agency code	C an..3	**R**	*	9 = GS1
C058	NAME AND ADDRESS	C	**O**		This composite may only be used to fulfill the requirements of directive 2003/58/EC, article 4.
3124	Name and address description	M an..35	**M**		
3124	Name and address description	C an..35	**O**		
3124	Name and address description	C an..35	**O**		
3124	Name and address description	C an..35	**O**		
3124	Name and address description	C an..35	**O**		
C080	PARTY NAME	C	**D**		
3036	Party name	M an..35	**M**		Party Name in clear text.
3036	Party name	C an..35	**O**		
3036	Party name	C an..35	**O**		
3036	Party name	C an..35	**O**		
3036	Party name	C an..35	**O**		
3045	Party name format code	C an..3	**O**		
C059	STREET	C	**D**		
3042	Street and number or post office box identifier	M an..35	**M**		Building Name/Number and Street Name
3042	Street and number or post office box identifier	C an..35	**O**		
3042	Street and number or post office box identifier	C an..35	**O**		
3042	Street and number or post office box identifier	C an..35	**O**		
3164	City name	C an..35	**D**		City/Town name, clear text
C819	COUNTRY SUB-ENTITY DETAILS	C	**D**		
3229	Country sub-entity name code	C an..9	**O**		
1131	Code list identification code	C an..17	**O**		
3055	Code list responsible agency code	C an..3	**O**		

5. Segments Layout

Segment number: 13

		EDIFACT	GS1	*	Description
3228	Country sub-entity name	C an..70	**O**		County/State, clear text.
3251	Postal identification code	C an..17	**D**		Postal Code
3207	Country name code	C an..3	**D**		ISO 3166 two alpha code

Segment Notes:

This segment is used to identify the delivery party (premise) for which consumption information is being provided. For the purpose of this message a premise may be either a physical location where meters are found or an entity within an organisation (e.g. sales department) which issues credit or charge cards to their representatives for the procurement of metered products, i.e. telephone calls, gasoline products, etc.
This segment is the trigger segment to the detail section of the message and must therefore be included at least once in each message.
When the message is used to provide consumption information related to an invoice (using code 94E in the BGM segment) this segment group should only be repeated once. When the message is used to indicate consumption or qualitative information (using the code 99E in the BGM segment) this segment may be repeated to identify each premise for which information is being provided.

Example:
NAD+DP+5071615222229::9'

Dependency Notes:
The following composites and data elements are only used when a coded name and address can not be used.
The affected composites and data elements are as follows:
C080 - C059 - 3164 - C819 - 3251 - 3207

5. Segments Layout

Segment number: 14

SG5	- M	99999	-	NAD-SG6
SG6	- M	99999	-	LOC-DTM-SG7-SG8-SG9
LOC	- M	1	-	Place/location identification

Function:

To identify a place or a location and/or related locations.

		EDIFACT	GS1	*	Description
3227	Location function code qualifier	M an..3	**M**	*	301 = Location of meter
C517	LOCATION IDENTIFICATION	C	**A**		
3225	Location name code	C an..25	**A**		GLN - Format n13
1131	Code list identification code	C an..17	**N**		
3055	Code list responsible agency code	C an..3	**D**		9 = GS1 91 = Assigned by supplier or supplier's agent 92 = Assigned by buyer or buyer's agent
3224	Location name	C an..256	**O**		
C519	RELATED LOCATION ONE IDENTIFICATION	C	**O**		
3223	First related location name code	C an..25	**O**		Global Location Number GLN - Format n13
1131	Code list identification code	C an..17	**O**		
3055	Code list responsible agency code	C an..3	**D**		9 = GS1
3222	First related location name	C an..70	**O**		
C553	RELATED LOCATION TWO IDENTIFICATION	C	**O**		
3233	Second related location name code	C an..25	**O**		Global Location Number GLN - Format n13
1131	Code list identification code	C an..17	**O**		
3055	Code list responsible agency code	C an..3	**D**		9 = GS1
3232	Second related location name	C an..70	**O**		
5479	Relation code	C an..3	**N**		

Segment Notes:

This segment is used to identify the location of a meter within the premise identified in the previous NAD segment. The location of a meter may be a fixed location identified by a Global Location Number GLN or an identity number assigned to a 'moving' meter, e.g. credit card number.

Example:
LOC+301+5071615333338::9'

5. Segments Layout

Segment number: 15

SG5	- M	99999	-	NAD-SG6
SG6	- M	99999	-	LOC-DTM-SG7-SG8-SG9
DTM	- C	9	-	Date/time/period

Function:

To specify date, and/or time, or period.

		EDIFACT	GS1	*	Description
C507	DATE/TIME/PERIOD	M	**M**		
2005	Date or time or period function code qualifier	M an..3	**M**	*	263 = Invoicing period 273 = Validity period 367 = Previous meter reading date 368 = Latest meter reading date
2380	Date or time or period value	C an..35	**R**		
2379	Date or time or period format code	C an..3	**R**		102 = CCYYMMDD 203 = CCYYMMDDHHMM 718 = CCYYMMDD-CCYYMMDD

Segment Notes:

This segment is used to specify any dates associated with the meter identified in the LOC segment.

Example:
DTM+367:20020104:102'

5. Segments Layout

Segment number: 16

SG5	- M	99999	-	NAD-SG6
SG6	- M	99999	-	LOC-DTM-SG7-SG8-SG9
SG7	- C	99	-	RFF-DTM
RFF	- M	1	-	Reference

Function:

To specify a reference.

		EDIFACT	GS1	*	Description
C506	REFERENCE	M	**M**		
1153	Reference code qualifier	M an..3	**M**		AXC = Metered services consumption report number ON = Order number (buyer) SE = Serial number
1154	Reference identifier	C an..70	**R**		
1156	Document line identifier	C an..6	**O**		
4000	Reference version identifier	C an..35	**N**		
1060	Revision identifier	C an..6	**N**		

Segment Notes:

This segment is used to identify any references associated with the currently identified meter. References provided here which use the same qualifier as that used in the RFF segment in the heading section will override the reference provided in the heading section for this meter only.

Example:
RFF+SE:2015ACX'
This reference identifies the serial number 2015ACX of the current meter.

5. Segments Layout

Segment number: 17

SG5	- M	99999	-	NAD-SG6
SG6	- M	99999	-	LOC-DTM-SG7-SG8-SG9
SG7	- C	99	-	RFF-DTM
DTM	- C	9	-	Date/time/period

Function:

To specify date, and/or time, or period.

		EDIFACT	GS1	*	Description
C507	DATE/TIME/PERIOD	M	**M**		
2005	Date or time or period function code qualifier	M an..3	**M**	*	171 = Reference date/time
2380	Date or time or period value	C an..35	**R**		
2379	Date or time or period format code	C an..3	**R**		102 = CCYYMMDD 203 = CCYYMMDDHHMM

Segment Notes:

This segment is used to specify dates relating to the references given in the previous RFF segment.

Example:
DTM+171:20020804:102'

5. Segments Layout

Segment number: 18

SG5	- M	99999	-	NAD-SG6
SG6	- M	99999	-	LOC-DTM-SG7-SG8-SG9
SG8	- C	99	-	CCI-DTM
CCI	- M	1	-	Characteristic/class id

Function:

To identify and describe a specific characteristic and its relevance for subsequent business processes.

		EDIFACT	GS1	*	Description
7059	Class type code	C an..3	**O**		8 = Meter 11 = Product
C502	MEASUREMENT DETAILS	C	**N**		
6313	Measured attribute code	C an..3	**O**		
6321	Measurement significance code	C an..3			
6155	Non-discrete measurement name code	C an..17			
6154	Non-discrete measurement name	C an..70			
C240	PRODUCT CHARACTERISTIC	C	**O**		
7037	Characteristic description code	M an..17	**M**		This data element is used to identify the characteristics of the current meter in coded form. As no EDIFACT code list exists for this data element codes should be allocated depending on the requirements of the user. Should it not be possible to provide a user code in this data element and a free form characteristic description is used in data element 7036, then it is recommended that the code value 'ZZZ' be put in data element 7037 (which is mandatory).
1131	Code list identification code	C an..17	**O**		
3055	Code list responsible agency code	C an..3	**D**		60 = Assigned by national trade agency 91 = Assigned by supplier or supplier's agent 92 = Assigned by buyer or buyer's agent
7036	Characteristic description	C an..35	**O**		This data element is used to provide free form text characteristics for use where no coded values exist in data element 7037.
7036	Characteristic description	C an..35	**O**		
4051	Characteristic relevance code	C an..3	**C**		

Segment Notes:

This segment is used to specify the characteristics of the currently identified meter or product supplied on the meter.

Example:
CCI+8++ZZZ::91'
This example indicates for the gas industry that the product characteristic being identified for the product is calorific value through the use of the supplier code value 82.

CCI+8++ZZZ::91:COIN METER TYPE X-14'
This example indicates the characteristic of the meter in free text form because no code value exists.

5. Segments Layout

Segment number: 19

SG5	- M	99999	-	NAD-SG6
SG6	- M	99999	-	LOC-DTM-SG7-SG8-SG9
SG8	- C	99	-	CCI-DTM
DTM	- C	99	-	Date/time/period

Function:

To specify date, and/or time, or period.

		EDIFACT	GS1	*	Description
C507	DATE/TIME/PERIOD	M	**M**		
2005	Date or time or period function code qualifier	M an..3	**M**	*	7 = Effective date/time 18 = Installation date/time/period 94 = Production/manufacture date
2380	Date or time or period value	C an..35	**R**		
2379	Date or time or period format code	C an..3	**R**		102 = CCYYMMDD 203 = CCYYMMDDHHMM

Segment Notes:

This segment is used to specify dates relating to the characteristics of the meter specified in the previous CCI segment.

Example:
DTM+18:19970115:102'

5. Segments Layout

Segment number: 20

SG5	- M	99999	-	NAD-SG6
SG6	- M	99999	-	LOC-DTM-SG7-SG8-SG9
SG9	- C	99999	-	LIN-PIA-IMD-PRI-NAD-MOA-SG10-SG11
LIN	- M	1	-	Line item

Function:

To identify a line item and configuration.

		EDIFACT	GS1	*	Description
1082	Line item identifier	C an..6	**R**		Application generated number of the item lines within the metered services consumption report message.
1229	Action request/notification description code	C an..3	**N**		
C212	ITEM NUMBER IDENTIFICATION	C	**D**		This composite is only used for the identification of GS1 codes. If another coding structure is required, e. g., supplier codes, this composite will not be used and the code will be detailed in the PIA segment.
7140	Item identifier	C an..35	**R**		GTIN - Format n13 - this is the number of the metered products or services.
7143	Item type identification code	C an..3	**R**	*	SRV = GS1 Global Trade Item Number
1131	Code list identification code	C an..17	**N**		
3055	Code list responsible agency code	C an..3	**N**		
C829	SUB-LINE INFORMATION	C	**D**		
5495	Sub-line indicator code	C an..3	**R**	*	1 = Sub-line information
1082	Line item identifier	C an..6	**R**		
1222	Configuration level number	C n..2	**N**		
7083	Configuration operation code	C an..3	**N**		

Segment Notes:

This segment is used to identify a product for which consumption or qualitative information is being provided.
If Global Trade Item Numbers are available it is mandatory to use GTIN within the LIN segment.

Note on DE 1082:
Numbering rule: In Part I, section 4.10 there is the recommendation “Within EANCOM® it is recommended that the line numbers used in the first occurrence of data element 1082 in the LIN segment be sequential, starting at 1 for each new message.”

Note on DE 7140:
Only the following significant digits are possible:
- 8 digits for GTIN 8 codes
- 12 digits for GTIN 12 codes
- 13 digits for GTIN 13 codes
- 14 digits for GTIN 14 codes

Dependency Note:
C829 is only used when sub-lines are required.
FOR A COMPLETE DESCRIPTION ON THE USAGE OF SUB-LINES PLEASE REFER TO PART I, SECTION 4.10.

Example:
LIN+1++4000862141404:SRV'

5. Segments Layout

Segment number: 21

SG5	- M	99999	-	NAD-SG6
SG6	- M	99999	-	LOC-DTM-SG7-SG8-SG9
SG9	- C	99999	-	LIN-PIA-IMD-PRI-NAD-MOA-SG10-SG11
PIA	- C	9	-	Additional product id

Function:

To specify additional or substitutional item identification codes.

		EDIFACT	GS1	*	Description
4347	Product identifier code qualifier	M an..3	**M**	*	1 = Additional identification 5 = Product identification Product Id function coded has the following restricted coded functions: 1 - Additional Identification - To provide an additional identity for the product identified in the LIN segment. The additional identification can consist of : A supplemental identification which provides more information complementary to the GTIN provided in the LIN segment, e.g. a batch number, promotional variant number, product group number, etc. 5 - Product Identification - To provide the primary product identification code when no GTIN has been provided in the LIN segment.
C212	ITEM NUMBER IDENTIFICATION	M	**M**		
7140	Item identifier	C an..35	**R**		
7143	Item type identification code	C an..3	**R**		MF = Manufacturer's (producer's) article number SA = Supplier's article number SRV = GS1 Global Trade Item Number
1131	Code list identification code	C an..17	**O**		
3055	Code list responsible agency code	C an..3	**D**		9 = GS1
C212	ITEM NUMBER IDENTIFICATION	C	**O**		
7140	Item identifier	C an..35	**R**		
7143	Item type identification code	C an..3	**R**		
1131	Code list identification code	C an..17	**O**		
3055	Code list responsible agency code	C an..3	**D**		
C212	ITEM NUMBER IDENTIFICATION	C	**O**		
7140	Item identifier	C an..35	**R**		
7143	Item type identification code	C an..3	**R**		
1131	Code list identification code	C an..17	**O**		
3055	Code list responsible agency code	C an..3	**D**		
C212	ITEM NUMBER IDENTIFICATION	C	**O**		
7140	Item identifier	C an..35	**R**		

5. Segments Layout

Segment number: 21

		EDIFACT	GS1	*	Description
7143	Item type identification code	C an..3	**R**		
1131	Code list identification code	C an..17	**O**		
3055	Code list responsible agency code	C an..3	**D**		
C212	ITEM NUMBER IDENTIFICATION	C	**O**		
7140	Item identifier	C an..35	**R**		
7143	Item type identification code	C an..3	**R**		
1131	Code list identification code	C an..17	**O**		
3055	Code list responsible agency code	C an..3	**D**		

Segment Notes:

This segment is used to specify additional or substitutional item identification codes such as a buyer's or supplier's item number.

Examples:
PIA+1+ABC5343:MF'
In this example the PIA segment is used to provide an additional identification to the GTIN provided in the LIN segment. The GTIN 4000862141404 provided in the LIN segment refers to the manufacturers article number ABC5343.

PIA+5+2209953C001L:AC'
This example details the HIBC code 2209953C001L which is provided as the primary product code because no GTIN was provided in the LIN segment.

5. Segments Layout

Segment number: 22

SG5	- M	99999	-	NAD-SG6
SG6	- M	99999	-	LOC-DTM-SG7-SG8-SG9
SG9	- C	99999	-	LIN-PIA-IMD-PRI-NAD-MOA-SG10-SG11
IMD	- C	9	-	Item description

Function:

To describe an item in either an industry or free format.

		EDIFACT	GS1	*	Description
7077	Description format code	C an..3	**O**		C = Code (from industry code list) F = Free-form S = Structured (from industry code list) B = Code and text
C272	ITEM CHARACTERISTIC	C	**O**		
7081	Item characteristic code	C an..3	**R**		
1131	Code list identification code	C an..17	**O**		
3055	Code list responsible agency code	C an..3	**D**	*	9 = GS1 Must be used if DE7081 contains an GS1 code.
C273	ITEM DESCRIPTION	C	**A**		
7009	Item description code	C an..17	**O**		CU = Consumer unit (GS1 Permanent Code) TU = Traded unit (GS1 Permanent Code)
1131	Code list identification code	C an..17	**O**		
3055	Code list responsible agency code	C an..3	**D**		9 = GS1 91 = Assigned by supplier or supplier's agent 92 = Assigned by buyer or buyer's agent
7008	Item description	C an..256	**O**		
7008	Item description	C an..256	**O**		
3453	Language name code	C an..3	**O**		
7383	Surface or layer code	C an..3	**N**		

Segment Notes:

This segment is used to describe the current line item.
It is recommended that this segment only be used for coded descriptions. Data element 7008 in clear text should only be used when no product code is available or when free-form descriptions are required by trading partners.

Example:
IMD+C++TU::9'
IMD+F++:::GRADE A PETROLEUM'

5. Segments Layout

Segment number: 23

SG5	- M	99999	-	NAD-SG6
SG6	- M	99999	-	LOC-DTM-SG7-SG8-SG9
SG9	- C	99999	-	LIN-PIA-IMD-PRI-NAD-MOA-SG10-SG11
PRI	- C	9	-	Price details

Function:

To specify price information.

		EDIFACT	GS1	*	Description
C509	PRICE INFORMATION	C	**R**		
5125	Price code qualifier	M an..3	**M**		INF = Information
5118	Price amount	C n..15	**R**		
5375	Price type code	C an..3	**O**		CA = Catalogue CT = Contract
5387	Price specification code	C an..3	**O**		NTP = Net unit price
5284	Unit price basis value	C n..9	**D**		
6411	Measurement unit code	C an..3	**D**		
5213	Sub-line item price change operation code	C an..3	**N**		

Segment Notes:

This segment specifies pricing information relevant to the current line item.

Example:
PRI+INF:14.50:CA:NTP'
Net unit price of 14.50 (excluding tax) is an information price and includes all allowances and charges.

Dependency Notes:
Data elements 5284 and 6411 are only used to indicate that the price is for a variable quantity product.

5. Segments Layout

Segment number: 24

SG5	- M	99999	-	NAD-SG6
SG6	- M	99999	-	LOC-DTM-SG7-SG8-SG9
SG9	- C	99999	-	LIN-PIA-IMD-PRI-NAD-MOA-SG10-SG11
NAD	- C	9	-	Name and address

Function:

To specify the name/address and their related function, either by C082 only and/or unstructured by C058 or structured by C080 thru 3207.

		EDIFACT	GS1	*	Description
3035	Party function code qualifier	M an..3	**M**		AP = Accepting party SU = Supplier The code value 'AP' should only be used to indicate the party accepting a telephone call. When this code is used the telephone number of the accepting party should be put in data element 3039. The code value 'SU' should only be used in this position of the message to identify a third party supplier, e.g. a service station supplying gasoline products. The supplier identified here does not override the supplier identified in the heading section of the message.
C082	PARTY IDENTIFICATION DETAILS	C	**A**		
3039	Party identifier	M an..35	**M**		For identification of parties it is recommended to use GLN - Format n13.
1131	Code list identification code	C an..17	**N**		
3055	Code list responsible agency code	C an..3	**R**	*	9 = GS1 91 = Assigned by supplier or supplier's agent
C058	NAME AND ADDRESS	C	**O**		This composite may only be used to fulfill the requirements of directive 2003/58/EC, article 4.
3124	Name and address description	M an..35	**M**		
3124	Name and address description	C an..35	**O**		
3124	Name and address description	C an..35	**O**		
3124	Name and address description	C an..35	**O**		
3124	Name and address description	C an..35	**O**		
C080	PARTY NAME	C	**D**		
3036	Party name	M an..35	**M**		Party Name in clear text.
3036	Party name	C an..35	**O**		
3036	Party name	C an..35	**O**		
3036	Party name	C an..35	**O**		
3036	Party name	C an..35	**O**		
3045	Party name format code	C an..3	**O**		
C059	STREET	C	**D**		
3042	Street and number or post office box identifier	M an..35	**M**		Building Name/Number and Street Name
3042	Street and number or post office box identifier	C an..35	**O**		
3042	Street and number or post office box identifier	C an..35	**O**		

5. Segments Layout

Segment number: 24

		EDIFACT	GS1	*	Description
3042	Street and number or post office box identifier	C an..35	**O**		
3164	City name	C an..35	**D**		City/Town name, clear text
C819	COUNTRY SUB-ENTITY DETAILS	C	**D**		
3229	Country sub-entity name code	C an..9	**O**		
1131	Code list identification code	C an..17	**O**		
3055	Code list responsible agency code	C an..3	**O**		
3228	Country sub-entity name	C an..70	**O**		County/State, clear text.
3251	Postal identification code	C an..17	**D**		Postal Code
3207	Country name code	C an..3	**D**		ISO 3166 two alpha code

Segment Notes:

This segment is used to identify parties related to the current product or service, e.g. the seller (service station) of gasoline products, the party which accepts or receives a telephone call.

Example:
NAD+SU+5411111123550::9'

Dependency Notes:
The following composites and data elements are only used when a coded name and address can not be used.
The affected composites and data elements are as follows:
C080 - C059 - 3164 - C819 - 3251 - 3207

5. Segments Layout

Segment number: 25

SG5	- M	99999	-	NAD-SG6
SG6	- M	99999	-	LOC-DTM-SG7-SG8-SG9
SG9	- C	99999	-	LIN-PIA-IMD-PRI-NAD-MOA-SG10-SG11
MOA	- C	9	-	Monetary amount

Function:

To specify a monetary amount.

		EDIFACT	GS1	*	Description
C516	MONETARY AMOUNT	M	**M**		
5025	Monetary amount type code qualifier	M an..3	**M**	*	203 = Line item amount
5004	Monetary amount	C n..35	**R**		
6345	Currency identification code	C an..3	**D**		
6343	Currency type code qualifier	C an..3	**D**	*	3 = Home currency 14 = Supplier currency Code value '3' in this data element is used to indicate the currency in which the party consuming the product or service will, or has been, billed. Code value '14' is used to identify the currency of the third party supplier of the goods or services.
4405	Status description code	C an..3	**N**		

Segment Notes:

This segment is used to specify the monetary value of the current product or service, e.g. the total cost of long distance telephone calls.

Example:
MOA+203:50:GBP:14'
MOA+203:75:EUR:3'
The third party supplier line item amount for the current line item is 50 Pounds Sterling which converts into 75 Euro in the currency of the cardholder.

Dependency Notes:
DE's 6345 and 6343: These data elements are only used when the product or services has been supplied in one currency and will be billed in the home currency of the party receiving the goods or services.

5. Segments Layout

Segment number: 26

SG5	- M	99999	-	NAD-SG6
SG6	- M	99999	-	LOC-DTM-SG7-SG8-SG9
SG9	- C	99999	-	LIN-PIA-IMD-PRI-NAD-MOA-SG10-SG11
SG10	- M	9999	-	QTY-DTM
QTY	- M	1	-	Quantity

Function:

To specify a pertinent quantity.

		EDIFACT	GS1	*	Description
C186	QUANTITY DETAILS	M	**M**		
6063	Quantity type code qualifier	M an..3	**M**		46 = Delivered quantity 47 = Invoiced quantity 74 = Latest cumulative quantity 79 = Previous cumulative quantity 99 = Estimated quantity 191 = Adjustment to inventory quantity
6060	Quantity	M an..35	**M**		
6411	Measurement unit code	C an..3	**D**		This DE is only used if the current line item is of variable quantity.

Segment Notes:

This segment is used to specify quantities related to the current line item.

Example:
QTY+74:15000:KWT'

5. Segments Layout

Segment number: 27

SG5	- M	99999	- NAD-SG6
SG6	- M	99999	- LOC-DTM-SG7-SG8-SG9
SG9	- C	99999	- LIN-PIA-IMD-PRI-NAD-MOA-SG10-SG11
SG10	- M	9999	- QTY-DTM
DTM	- C	9	- Date/time/period

Function:

To specify date, and/or time, or period.

		EDIFACT	GS1	*	Description
C507	DATE/TIME/PERIOD	M	**M**		
2005	Date or time or period function code qualifier	M an..3	**M**	*	263 = Invoicing period 273 = Validity period 356 = Sales date, and or time, and or period 367 = Previous meter reading date 368 = Latest meter reading date 802 = Service disconnection date/time, actual 44E = Connection date/time (GS1 Temporary Code) Codes 44E and 802 should only be used to indicate the date/time of connection and disconnect of a telephone call.
2380	Date or time or period value	C an..35	**R**		
2379	Date or time or period format code	C an..3	**R**		204 = CCYYMMDDHHMMSS 719 = CCYYMMDDHHMM-CCYYMMDDHHMM

Segment Notes:

This segment is used to specify any dates and or times related to the quantity specified in the previous QTY segment.

Example:
DTM+367:20020102:102'

5. Segments Layout

Segment number: 28

SG5	- M	99999 -	NAD-SG6
SG6	- M	99999 -	LOC-DTM-SG7-SG8-SG9
SG9	- C	99999 -	LIN-PIA-IMD-PRI-NAD-MOA-SG10-SG11
SG11	- C	99 -	CCI-MEA-DTM
CCI	- M	1 -	Characteristic/class id

Function:

To identify and describe a specific characteristic and its relevance for subsequent business processes.

		EDIFACT	GS1	*	Description
7059	Class type code	C an..3	**O**		8 = Meter 11 = Product
C502	MEASUREMENT DETAILS	C	**N**		
6313	Measured attribute code	C an..3	**O**		
6321	Measurement significance code	C an..3			
6155	Non-discrete measurement name code	C an..17			
6154	Non-discrete measurement name	C an..70			
C240	PRODUCT CHARACTERISTIC	C	**O**		
7037	Characteristic description code	M an..17	**M**		This data element is used to identify the characteristics of the current line item/meter in coded form. As no EDIFACT code list exists for this data element codes should be allocated depending on the requirements of the user. Should it not be possible to provide a user code in this data element and a free form characteristic description is used in data element 7036, then it is recommended that the code value 'ZZZ' be put in data element 7037 (which is mandatory). ZZZ = Mutually defined (GS1 Permanent Code)
1131	Code list identification code	C an..17	**O**		
3055	Code list responsible agency code	C an..3	**D**		91 = Assigned by supplier or supplier's agent 92 = Assigned by buyer or buyer's agent 60 = Assigned by national trade agency
7036	Characteristic description	C an..35	**O**		This data element is used to provide free form text characteristics for use where no coded values exist in data element 7037.
7036	Characteristic description	C an..35	**O**		
4051	Characteristic relevance code	C an..3	**N**		

Segment Notes:

This segment is used to specify the characteristics of the current line item, the currently identified meter or product supplied on the meter.

Example:
CCI+11++82::91'
This example indicates for the gas industry that the characteristic being identified for the product is calorific value through the use of the supplier assigned code value 82.

5. Segments Layout

Segment number: 28

CCI+8++ZZZ::91:COIN METER TYPE X-14'
This example indicates the characteristic of the meter in free text form because no code value exists.

5. Segments Layout

Segment number: 29

SG5	- M	99999 -	NAD-SG6
SG6	- M	99999 -	LOC-DTM-SG7-SG8-SG9
SG9	- C	99999 -	LIN-PIA-IMD-PRI-NAD-MOA-SG10-SG11
SG11	- C	99 -	CCI-MEA-DTM
MEA	- C	99 -	Measurements

Function:

To specify physical measurements, including dimension tolerances, weights and counts.

		EDIFACT	GS1	*	Description
6311	Measurement purpose code qualifier	M an..3	**M**		SV = Specification value CT = Counts DV = Discrete measurement value VO = Observed value (GS1 Temporary Code) VT = True value (GS1 Temporary Code)
C502	MEASUREMENT DETAILS	C	**O**		
6313	Measured attribute code	C an..3	**A**		AAP = Voltage AAQ = Power consumption AAR = Heat dissipation AAY = Water content ABJ = Volume TC = Temperature ZWA = Waste content
6321	Measurement significance code	C an..3	**O**		3 = Approximately 4 = Equal to
6155	Non-discrete measurement name code	C an..17	**O**		
6154	Non-discrete measurement name	C an..70	**N**		
C174	VALUE/RANGE	C	**R**		
6411	Measurement unit code	M an..3	**M**		
6314	Measurement value	C an..18	**O**		
6162	Range minimum value	C n..18	**O**		
6152	Range maximum value	C n..18	**O**		
6432	Significant digits quantity	C n..2	**O**		
7383	Surface or layer code	C an..3	**N**		

Segment Notes:

This segment is used to specify any measurements related to the currently identified product characteristic class and to provide measurements relevant to the characteristics provided for all the reported services (products) in one location.

Example:
MEA+SV+AAP+VLT:2000'

MEA+VO+ABJ+MTQ:12'

5. Segments Layout

Segment number: 30

SG5	- M	99999 -	NAD-SG6
SG6	- M	99999 -	LOC-DTM-SG7-SG8-SG9
SG9	- C	99999 -	LIN-PIA-IMD-PRI-NAD-MOA-SG10-SG11
SG11	- C	99 -	CCI-MEA-DTM
DTM	- C	9 -	Date/time/period

Function:

To specify date, and/or time, or period.

		EDIFACT	GS1	*	Description
C507	DATE/TIME/PERIOD	M	**M**		
2005	Date or time or period function code qualifier	M an..3	**M**		7 = Effective date/time 18 = Installation date/time/period 94 = Production/manufacture date 273 = Validity period
2380	Date or time or period value	C an..35	**R**		
2379	Date or time or period format code	C an..3	**R**		102 = CCYYMMDD 203 = CCYYMMDDHHMM 718 = CCYYMMDD-CCYYMMDD

Segment Notes:

This segment is used to specify any dates and or times related to the measurements or meter characteristics specified in the current line item characteristics.

Example:
DTM+7:20020102:102'

DTM+18:20020115:102'

5. Segments Layout

Segment number: 31

CNT - C 99 - Control total					
Function: To provide control total.					
		EDIFACT	GS1	*	Description
C270	CONTROL	M	**M**		
6069	Control total type code qualifier	M an..3	**M**	*	31E = Number of premises (GS1 Temporary Code) 36E = Number of meters (GS1 Temporary Code)
6066	Control total value	M n..18	**M**		When using code '31E' this figure is calculated by counting the total number of NAD segments in segment group 5. When using code '36E' this figure is calculated by counting the total number of meters in segment group 6.
6411	Measurement unit code	C an..3	**O**		
Segment Notes: This is used to provide message control information for checking on the message receivers in-house system. Example: CNT+36E:45'					

5. Segments Layout

Segment number: 32

UNT - M 1 - Message trailer					
Function: To end and check the completeness of a message. Notes: 1. 0062, the value shall be identical to the value in 0062 in the corresponding UNH segment.					
		EDIFACT	GS1	*	Description
0074	Number of segments in a message	M n..10	**M**		The total number of segments in the message is detailed here.
0062	Message reference number	M an..14	**M**		The message reference numbered detailed here should equal the one specified in the UNH segment.
Segment Notes: This segment is a mandatory UN/EDIFACT segment. It must always be the last segment in the message. Example: UNT+37+1'					

5. Segments Layout

Segment number: 33

UNZ - M 1 - Interchange trailer					
Function: To end and check the completeness of an interchange. Notes: 1. 0020, the value shall be identical to the value in 0020 in the corresponding UNB segment.					
		EDIFACT	GS1	*	Description
0036	Interchange control count	M n..6	**M**		Number of messages or functional groups within an interchange.
0020	Interchange control reference	M an..14	**M**		Identical to DE 0020 in UNB segment.
Segment Notes: This segment is used to provide the trailer of an interchange. DE 0036: If functional groups are used, this is the number of functional groups within the interchange. If functional groups are not used, this is the number of messages within the interchange. UNZ+5+12345555'					

Example 1 - Gas

The following is an example of a Metered Services Consumption Report message sent from a supplier identified by GLN 5098765111111 to a buyer identified by GLN 5471615111118. The message was generated on the 2nd of January 2002 and has the identity number 8552. Two premises to which the consumption applies to are identified by GLNs 5071615222229 and 5071615333338.

Premise 1

Three meters within premise 1 are identified by GLNs 5098765222220, 5098765333339 (was fitted with an anti tamper band on the 1st of December 2001) and 5098765444448. The date on which the meters were read in these premises is identified as being the 14th of December 2001.

A product identified by GTIN 5467890102019 was measured at the first two meters. The reading at the first meter in the premises indicated consumption of 39486058.01 cubic metres for the reading period, with the total consumption to date for the meter being 2339486058.65 cubic meters. The second meter indicated consumption of 15834905.96 cubic metres for the read period and a total to date of 4515834905.08 cubic metres.

The third meter measured, for the reading period, consumption of 233433.42 cubic metres for the product identified by GTIN 5467890102040. No cumulative reading is provided for this meter. The calorific value of the consumption is indicated as being 91431.782 gigajoules.

Premise 2

Two meters within premise 2 are identified by GLNs 5098765999993 and 5098765888884. The date on which both meters were read is specified as being the 18th of December 2001.

A product identified by GTIN 5467890102019 was measured at both of the meters. The reading at the first meter in the premises indicated consumption of 566058.40 cubic metres for the reading period, with the total consumption to date for the meter being 39644158.80 cubic meters. The second meter indicated consumption of 58905.41 cubic metres for the read period and a total to date of 583905.48 cubic metres.

UNH+1+MSCONS:D:01B:UN:EAN004'	Message header
BGM+99E::9+8552+9'	Metered services consumption report number 8552
DTM+137:20020102:102'	Message date 2nd January 2002
NAD+SU+5098765111111::9'	Supplier identified by GLN 5098765111111
NAD+BY+5471615111118::9'	Buyer identified by GLN 5471615111118
UNS+D'	Separation between the header section and the detail section
NAD+DP+5071615222229::9'	Delivery party identified by GLN 5071615222229
LOC+17E+5098765222220::9'	Location of the meter using GLN 5098765222220
DTM+368:20011214:102'	Latest meter reading day 14th December 2001
LIN+1++5467890102019:SRV'	Line item number 1 identified with GTIN 5467890102019
QTY+46:39486058.01:MTQ'	Delivered quantity 39486058.01 cubic metres
QTY+74:2339486058.65:MTQ'	Latest cumulative quantity 2339486058.65 cubic metres
LOC+17E+5098765333339::9'	Location of the meter using GLN 5098765333339
DTM+368:20011214:102'	Latest meter reading day 14th December 2001
CCI+8++1::91’	Meter characteristic (using supplier code) ANTI TAMPER BANDED

DTM+18:20011201:102'	Installation date 1st December 2001
LIN+2++5467890102019:SRV'	Line item number 2 identified with GTIN 5467890102019
QTY+46:15834905.96:MTQ'	Delivered quantity 15834905.96 cubic metres
QTY+74:4515834905.08:MTQ'	Latest cumulative quantity 4515834905.08 cubic metres
LOC+17E+5098765444448::9'	Location of the meter using GLN 5098765444448
DTM+368:20011214:102'	Latest meter reading day 14th December 2001
LIN+3++5467890102040:SRV'	Line item number 3 identified with GTIN 5467890102040
QTY+46:233433.42:MTQ'	Delivered quantity 233433.42 cubic metres
CCI+11++14::91'	Product characteristic (using supplier code) CALORIFIC VALUE'
MEA+SV++GJO:91431.782'	Specification value 91431.782 gigajoule
NAD+DP+5071615333338::9'	Delivery party identified by GLN 5071615333338
LOC+17E+5098765999993::9'	Location of the meter using GLN 5098765999993
DTM+368:20011218:102'	Latest meter reading day 18th December 2001
LIN+4++5467890102019:SRV'	Line item number 4 identified with GTIN 5467890102019
QTY+46:566058.40:MTQ'	Delivered quantity 566058.40 cubic metres
QTY+74:39644158.80:MTQ'	Latest cumulative quantity 39644158.80 cubic metres
LOC+17E+5098765888884::9'	Location of the meter using GLN 5098765888884
DTM+368:20011218:102'	Latest meter reading day 18th December 2001
LIN+5++5467890102019:SRV'	Line item number 5 identified with GTIN 5467890102019
QTY+46:58905.41:MTQ'	Delivered quantity 58905.41 cubic metres
QTY+74:583905.48:MTQ'	Latest cumulative quantity 583905.48 cubic metres
UNT+37+1'	Total number of segments in the message equals 37

Example 2 - Telephone

The following is an example of a Metered Services Consumption Invoice Support message sent from a supplier identified by GLN 5411111123451 to a buyer identified by GLN 5412345123453. The message was generated on the 11th of January 2002 and has the identity number 95-00042.

The message provides consumption information to support an invoice sent on the 28th of December 2001 with the reference 10014. The premise to which the consumption applies to is identified by GLN 5412345111115.

Two meters (telephone numbers) are identified by GLNs 5411111123444 and 5411111123550. For the first meter local and long distance telephone services are reported and are identified by GTINs 5410738000152 and 5410738000169 respectively. The second meter reports, in addition to local and long distance calls, on international telephone calls identified by GTIN 5410738000183.

Premise	Meter	Product	Units	Price	Total

5412345111115	5411111123444	5410738000152	68	0.51	34.68
		5410738000169	21	1.08	22.68
	5411111123550	5410738000152	28	0.51	14.28
		5410738000169	8	1.08	8.64
		5410738000183	15	1.90	28.50

UNH+1+MSCONS:D:01B:UN:EAN004'	Message header
BGM+94E::9+95-00042+9'	Metered services consumption invoice support number 95-00042
DTM+137:20020111:102'	Message date 11th January 2002
NAD+SU+5411111123451::9'	Supplier identified by GLN 5411111123451
NAD+BY+5412345123453::9'	Buyer identified by GLN 5412345123453
UNS+D'	Separation between the header section and the detail section
NAD+DP+5412345111115::9'	Delivery party identified by GLN 5412345111115
LOC+17E+5411111123444::9'	Location of the meter using GLN 5411111123444
DTM+273:2001120120011231:718'	Validity period from 1st December 2001 to 31st December 2001
RFF+IV:10014'	Invoice number 10014
DTM+171:20011228:102'	Date of the invoice referenced 28th December 2001
LIN+1++5410738000152:SRV'	Line item number 1 identified with GTIN 5410738000152
PRI+INF:0.51:CT:NTP'	Information of the net unit price 0.51
MOA+203:34.68'	Line item amount 34.68
QTY+47:68'	Invoiced quantity 68
LIN+2++5410738000169:SRV'	Line item number 2 identified with GTIN 5410738000169
PRI+INF:1.08:CT:NTP'	Information of the net unit price 1.08
MOA+203:22.68'	Line item amount 22.68
QTY+47:21'	Invoiced quantity 21
LOC+17E+5411111123550::9'	Location of the meter using GLN 5411111123550
DTM+273:2001120120011231:718'	Validity period from 19th December 2001 to 31st December 2001
LIN+3++5410738000152:SRV'	Line item number 3 identified with GTIN 5410738000152
PRI+INF:0.51:CT:NTP'	Information of the net unit price 0.51

MOA+203:14.28'	Line item amount 14.28
QTY+47:28'	Invoiced quantity 28
LIN+4++5410738000169:SRV'	Line item number 4 identified with GTIN 5410738000169
PRI+INF:1.08:CT:NTP'	Information of the net unit price 1.08
MOA+203:8.64'	Line item amount 8.64
QTY+47:8'	Invoiced quantity 8
LIN+5++5410738000183:SRV'	Line item number 5 identified with GTIN 5410738000183
PRI+INF:1.90:CT:NTP'	Information of the net unit price 1.90
MOA+203:28.50'	Line item amount 28.50
QTY+47:15'	Invoiced quantity 15
CNT+31E:1'	Number of premises 1
CNT+36E:2'	Number of meters 2
UNT+36+1'	Total number of segments in the message equals 36

Example 3 - Charge Card for motoring

The following is an example of a Metered Services Consumption Invoice Support message sent from a supplier identified by GLN 5071615111110 to a buyer identified by GLN 5098765111111. The message was generated on the 4th of February 2002 and has the identity number 6078.

The message provides consumption information to support an invoice sent on the 4th of February 2002 with the reference AX-3255. The premise, a sales department within a firm, to which the consumption applies to is identified by GLN 5098765222220.

A charge card identified by the suppliers number CC-5523-4061 is identified as being the 'meter' being reported upon. The report is related to the consumption of two products, petroleum identified by GTIN 4000862141404 and motor oil identified by GTIN 5412345111184, at two different services stations, ESSO Ixelles and ESSO StGilles, at 10:15 on the 14th of January 2002 and at 16:45 on the 26th of January 2002 respectively.

Charge Card	Supplier	Product	Quantity	Price	Total
CC-5523-4061	ESSO Ixelles	4000862141404	40 Litres	25 per litre	1000
	ESSO StGilles	4000862141404	52 Litres	25 per litre	1300
		5412345111184	4 Litres	36 per litre	144

UNH+1+MSCONS:D:01B:UN:EAN004'	Message header
BGM+94E::9+6078+9'	Metered services consumption report number 6078
DTM+137:20020204:102'	Message date 4th February 2002
NAD+SU+5071615111110::9'	Supplier identified by GLN 5071615111110

NAD+BY+5098765111111::9'	Buyer identified by GLN 5098765111111
UNS+D'	Separation between the header section and the detail section
NAD+DP+5098765222220::9'	Delivery party identified by GLN 5098765222220
LOC+17E+CC-5523-4061::91'	Location of the meter using supplier internal code CC-5523-4061
DTM+263:2002010120020131:718'	Invoicing period 1st January 2002 to 31st January 2002
RFF+IV:AX-3255'	Invoice reference number AX-3255'
DTM+171:20020204:102'	Date of the invoice referenced 4th February 2002
LIN+1++4000862141404:SRV'	Line item number 1 identified with GTIN 4000862141404
PRI+INF:25:CT:NTP:1:LTR'	Information price from contract 25 per Litre
NAD+SU+++ESSO IXELLES’	Supplier Address ESSO Ixelles'
MOA+203:1000'	Line item amount 1.000
QTY+47:40'	Invoiced quantity 40
DTM+6:200201141015:718'	Sales date 14th January at 10.15
LIN+2++4000862141404:SRV'	Line item number 2 identified with GTIN 4000862141404
PRI+INF:25:CT:NTP:1:LTR'	Information price from contract 25 per Litre
NAD+SU+++ESSO ST GILLES'	Supplier address ESSO St Gilles'
MOA+203:1300'	Line item amount 1.300
QTY+47:52'	Invoiced quantity 52
DTM+6:200201261645:718'	Sales date 26th January at 16.45
LIN+3++5412345111184:SRV'	Line item number 3 identified with GTIN 5412345111184
PRI+INF:36:CT:NTP:1:LTR'	Information price from contract 36 per Litre
NAD+SU+++ESSO ST GILLES'	Supplier address ESSO St Gilles'
MOA+203:144'	Line item amount 144
QTY+47:4'	Invoiced quantity 4
DTM+6:200201261645:718'	Sales date 26th January at 16.45
CNT+31E:1'	Number of premises 1
CNT+36E:1'	Number of meters 1
UNT+32+1'	Total number of segments in the message equals 32

Note:
The EDI interchange will include the UNB..UNZ segments and, if applicable, the UNG..UNE segments. (See part 1 section 5.7).