EANCOM® 2002 S4

ORDERS

Purchase order message

Edition 2016 Upd. 2021

1. Introduction 2
2. Message Structure Chart 3
3. Branching Diagram 6
4. Segments Description 17
5. Segments Layout 26
6. Example(s) 141

1. Introduction

Status

MESSAGE TYPE	: ORDERS
REFERENCE DIRECTORY	: D.01B
EANCOM® SUBSET VERSION	: 010

Definition

A message specifying details for goods or services ordered under conditions agreed between the seller and the buyer.

Principles

The EANCOM® subset of the UNSM Purchase Order is intended to be used in day to day ordering transactions.

The recommended business practice is that one Purchase Order is placed for one delivery in one location at one time.

It is however possible to request deliveries in several locations, by using Segment Group 37 (LOC-QTY-DTM) in the detail section. Deliveries of this nature are termed split deliveries. Using the DTM (Date and Time) segment in the detail section, makes it possible to request deliveries on different dates within the same purchase order. Split deliveries may also take place to the same location on different dates over a period of time.

The Purchase Order message can be used to send blanket orders followed at a later date by a series of call-offs (both message types can be identified precisely in the BGM segment with the appropriate coded identifier). The blanket order specifies a global product quantity per line item to be ordered over a period of time. The subsequent call-offs referring to the blanket order will request a part of the global quantity with specific delivery dates and locations.

The Purchase Order message can also be used to send rush orders i.e. orders requesting the immediate availability of goods, using the appropriate coded identifier in the BGM segment.

2. Message Structure Chart

UNA		1	C	1	- Service string advice
UNB		2	M	1	- Interchange header
Purchase Order Heading Section					
UNH		3	M	1	- Message header
BGM		4	M	1	- Beginning of message
DTM		5	M	35	- Date/time/period
PAI		6	C	1	- Payment instructions
ALI		7	C	5	- Additional information
FTX		8	C	99	- Free text
SG1			C	9999	- RFF-DTM
RFF		9	M	1	- Reference
DTM		10	C	5	- Date/time/period
SG2	*		C	99	- NAD-LOC-FII-SG3-SG4-SG5
NAD		11	M	1	- Name and address
LOC		12	C	99	- Place/location identification
FII	+	13	C	5	- Financial institution information
SG3			C	99	- RFF
RFF		14	M	1	- Reference
SG4			C	5	- DOC
DOC		15	M	1	- Document/message details
SG5			C	5	- CTA-COM
CTA		16	M	1	- Contact information
COM		17	C	5	- Communication contact
SG6			C	5	- TAX-MOA
TAX		18	M	1	- Duty/tax/fee details
MOA		19	C	1	- Monetary amount
SG7			C	5	- CUX-DTM
CUX		20	M	1	- Currencies
DTM		21	C	5	- Date/time/period
SG8	*		C	10	- PAT-DTM-PCD-SG9
PAT	X	22	M	1	- Payment terms basis
DTM		23	C	5	- Date/time/period
PCD		24	C	1	- Percentage details
SG9	+		C	9999	- MOA
MOA		25	M	1	- Monetary amount
SG10			C	10	- TDT-SG11
TDT		26	M	1	- Details of transport
SG11	*		C	10	- LOC-DTM
LOC		27	M	1	- Place/location identification
DTM	+	28	C	5	- Date/time/period
SG12			C	5	- TOD-LOC
TOD		29	M	1	- Terms of delivery or transport
LOC		30	C	2	- Place/location identification
SG13	+		C	99	- PAC-SG14
PAC	+	31	M	1	- Package
SG14	+		C	5	- PCI-RFF-DTM-GIN
PCI	+	32	M	1	- Package identification
RFF	+	33	C	1	- Reference
DTM	+	34	C	5	- Date/time/period
GIN	+	35	C	10	- Goods identity number
SG15	+		C	10	- EQD
EQD	+	36	M	1	- Equipment details
SG19			C	99	- ALC-ALI-DTM-SG20-SG21-SG22-SG23-SG24
ALC		37	M	1	- Allowance or charge
ALI		38	C	5	- Additional information
DTM		39	C	5	- Date/time/period
SG20			C	1	- QTY-RNG
QTY		40	M	1	- Quantity

2. Message Structure Chart

RNG		41	C	1	- Range details
SG21			C	1	- PCD-RNG
PCD		42	M	1	- Percentage details
RNG		43	C	1	- Range details
SG22			C	2	- MOA-RNG
MOA		44	M	1	- Monetary amount
RNG		45	C	1	- Range details
SG23			C	1	- RTE-RNG
RTE		46	M	1	- Rate details
RNG		47	C	1	- Range details
SG24			C	5	- TAX-MOA
TAX		48	M	1	- Duty/tax/fee details
MOA		49	C	1	- Monetary amount

Purchase Order Detail Section

SG28	*		C	200000	- LIN-PIA-IMD-MEA-QTY-ALI-DTM-MOA-GIN-QVR-FTX-SG32-SG33-
LIN		50	M	1	- Line item
PIA		51	C	25	- Additional product id
IMD		52	C	99	- Item description
MEA		53	C	99	- Measurements
QTY		54	C	99	- Quantity
ALI	+	55	C	5	- Additional information
DTM		56	C	35	- Date/time/period
MOA		57	C	10	- Monetary amount
GIN		58	C	1000	- Goods identity number
QVR		59	C	1	- Quantity variances
FTX		60	C	99	- Free text
SG32	*		C	25	- PRI-CUX-DTM
PRI		61	M	1	- Price details
CUX		62	C	1	- Currencies
DTM	+	63	C	5	- Date/time/period
SG33			C	9999	- RFF-DTM
RFF		64	M	1	- Reference
DTM		65	C	5	- Date/time/period
SG34	*		C	99	- PAC-QTY-SG36
PAC		66	M	1	- Package
QTY	+	67	C	5	- Quantity
SG36			C	5	- PCI-RFF-DTM-GIN
PCI		68	M	1	- Package identification
RFF		69	C	1	- Reference
DTM		70	C	5	- Date/time/period
GIN		71	C	10	- Goods identity number
SG37			C	9999	- LOC-QTY-DTM
LOC		72	M	1	- Place/location identification
QTY		73	C	1	- Quantity
DTM		74	C	5	- Date/time/period
SG38			C	10	- TAX-MOA
TAX		75	M	1	- Duty/tax/fee details
MOA		76	C	1	- Monetary amount
SG39			C	999	- NAD-SG42
NAD		77	M	1	- Name and address
SG42			C	5	- CTA-COM
CTA		78	M	1	- Contact information
COM		79	C	5	- Communication contact
SG43			C	99	- ALC-ALI-DTM-SG44-SG45-SG46-SG47-SG48
ALC		80	M	1	- Allowance or charge
ALI		81	C	5	- Additional information
DTM		82	C	5	- Date/time/period
SG44			C	1	- QTY-RNG

2. Message Structure Chart

QTY	83	M	1	- Quantity
RNG	84	C	1	- Range details
SG45		C	1	- PCD-RNG
PCD	85	M	1	- Percentage details
RNG	86	C	1	- Range details
SG46		C	2	- MOA-RNG
MOA	87	M	1	- Monetary amount
RNG	88	C	1	- Range details
SG47		C	1	- RTE-RNG
RTE	89	M	1	- Rate details
RNG	90	C	1	- Range details
SG48		C	5	- TAX-MOA
TAX	91	M	1	- Duty/tax/fee details
MOA	92	C	1	- Monetary amount
SG49		C	10	- TDT
TDT	93	M	1	- Details of transport

Purchase Order Summary Section

UNS	94	M	1	- Section control
MOA	95	C	99	- Monetary amount
CNT	96	C	10	- Control total
UNT	97	M	1	- Message trailer
UNZ	98	M	1	- Interchange trailer

3. Branching Diagram

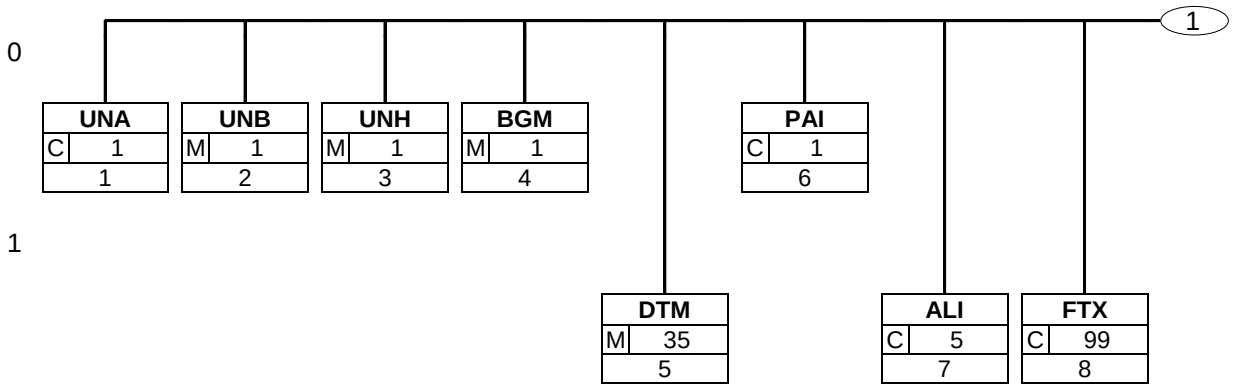

3. Branching Diagram

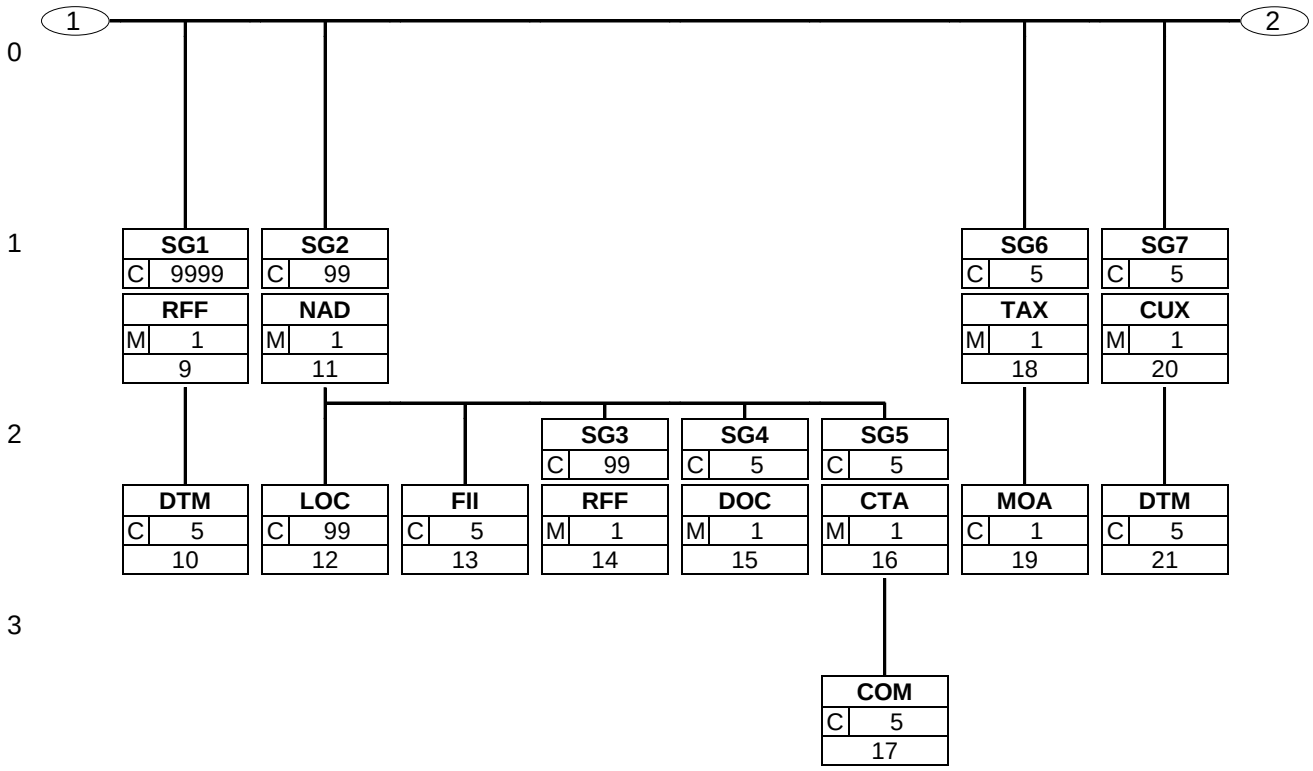

3. Branching Diagram

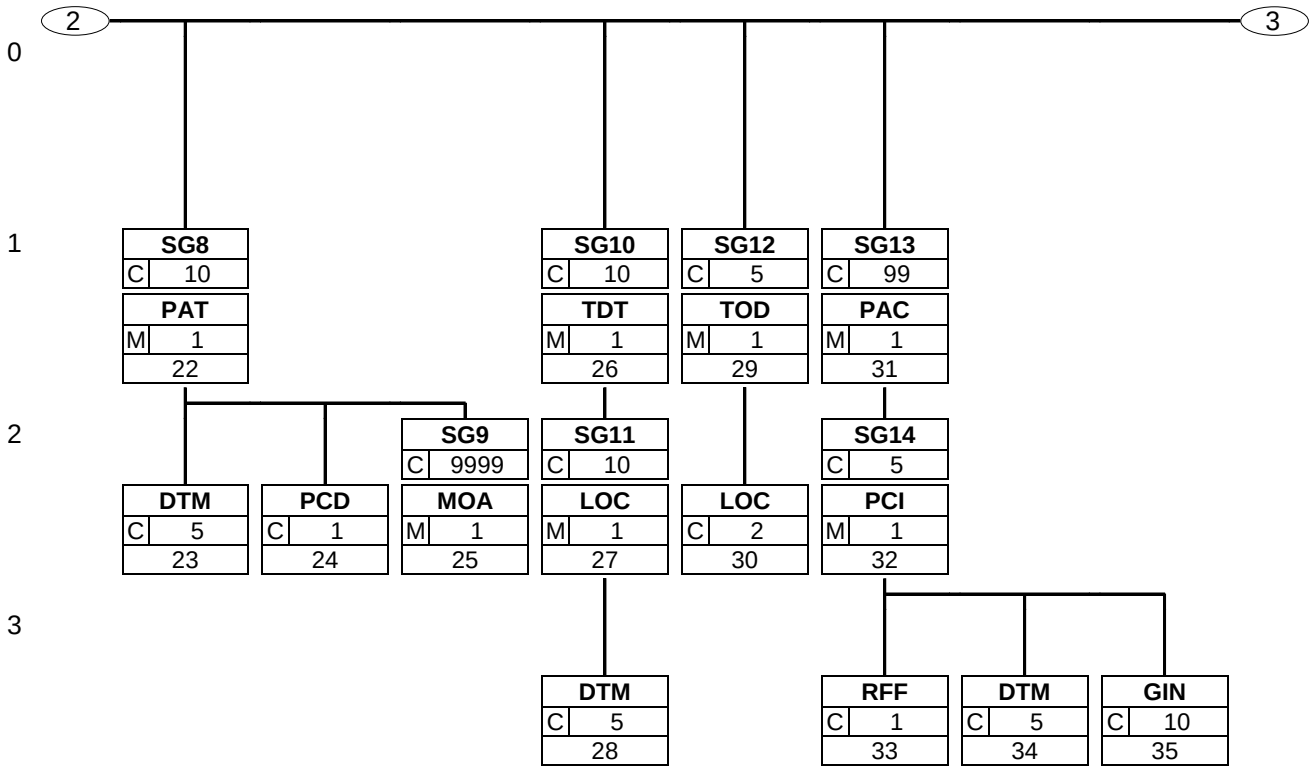

3. Branching Diagram

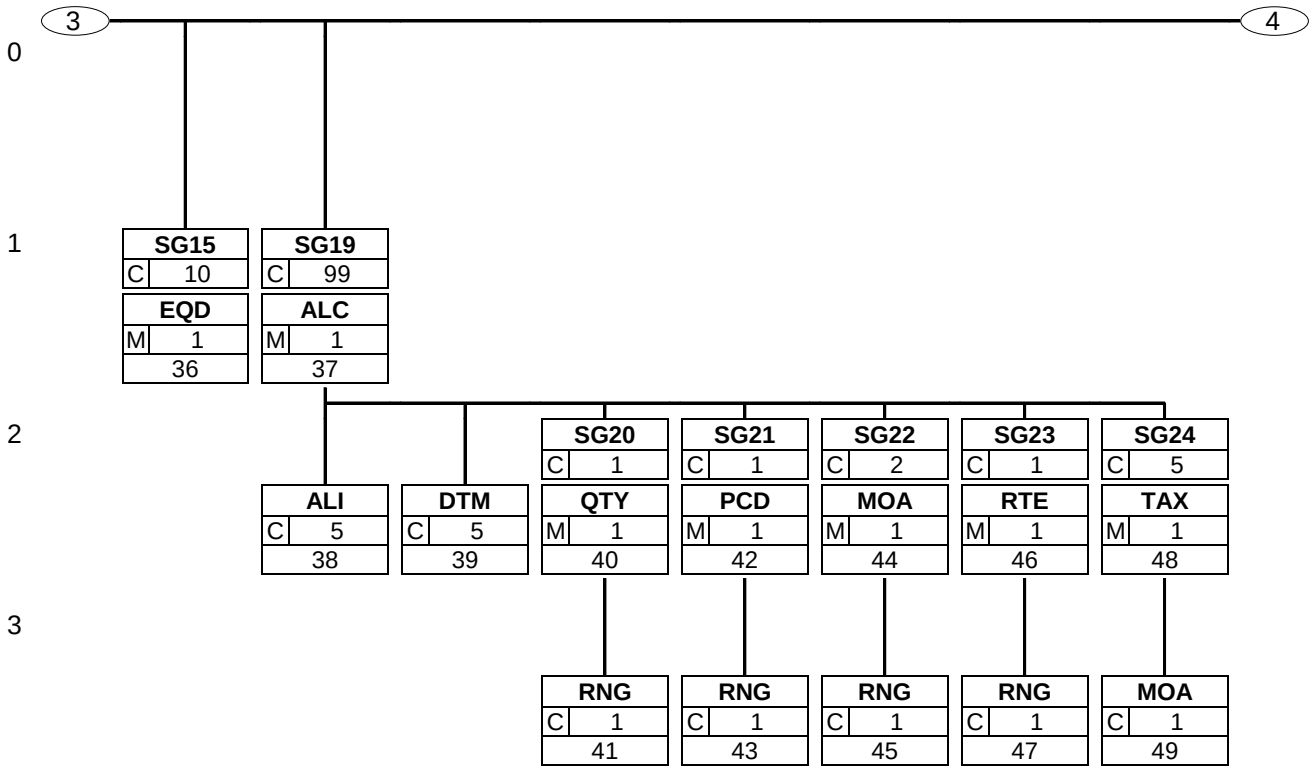

3. Branching Diagram

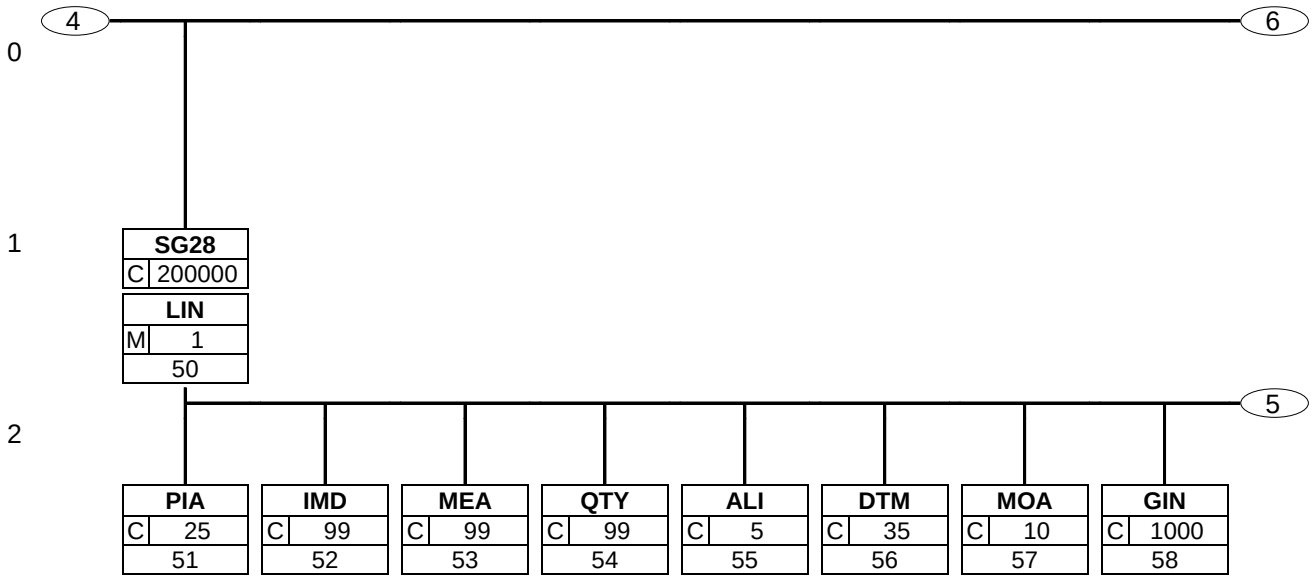

3. Branching Diagram

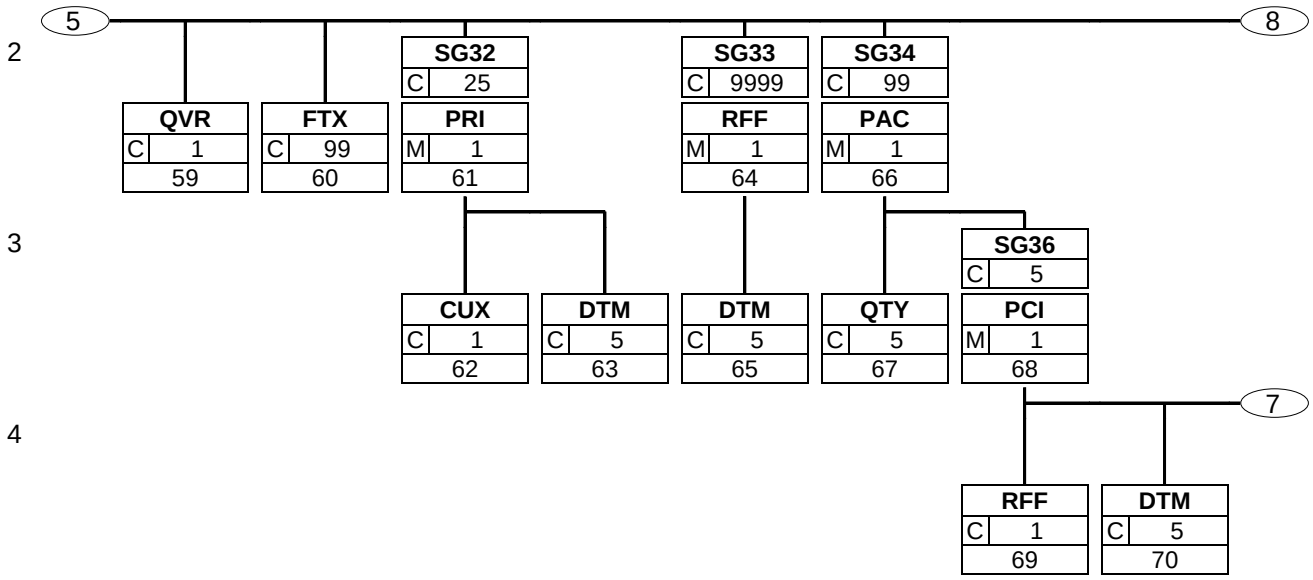

3. Branching Diagram

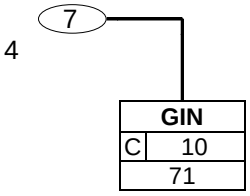

3. Branching Diagram

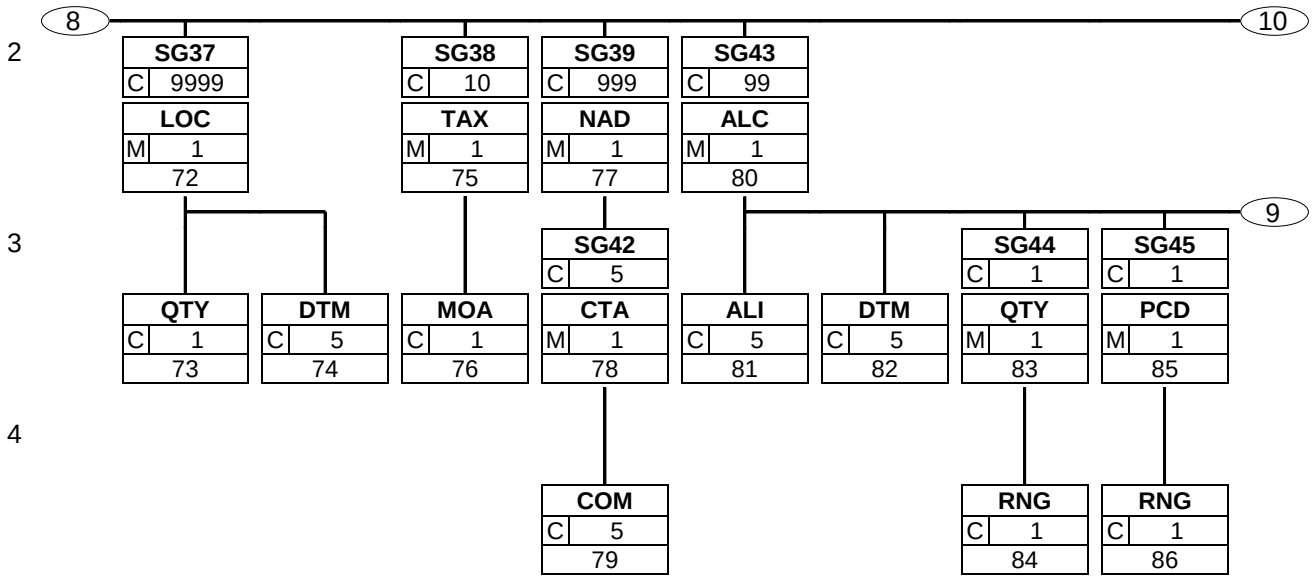

3. Branching Diagram

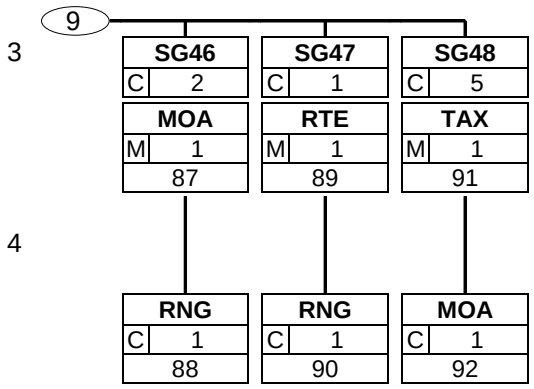

3. Branching Diagram

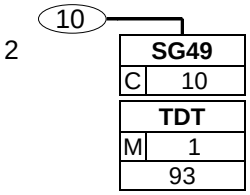

3. Branching Diagram

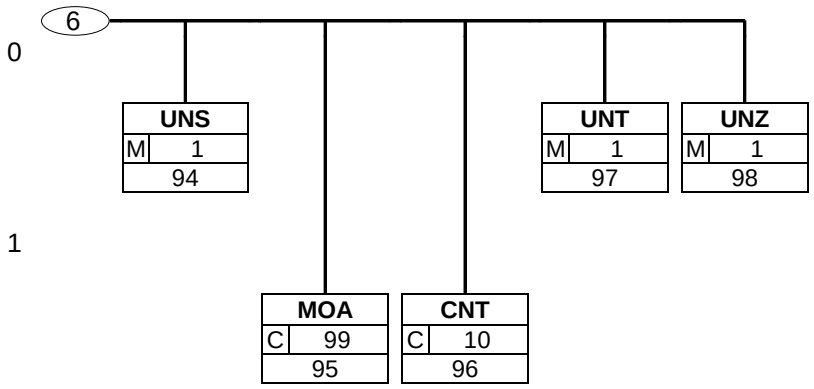

4. Segments Description

UNA - C 1 - Service string advice

This segment is used to inform the receiver of the interchange that a set of service string characters which are different to the default characters are being used.

UNB - M 1 - Interchange header

This segment is used to envelope the interchange, as well as to identify both, the party to whom the interchange is sent and the party who has sent the interchange. The principle of the UNB segment is the same as a physical envelope which covers one or more letters or documents, and which details, both the address where delivery is to take place and the address from where the envelope has come.

Purchase Order Heading Section

UNH - M 1 - Message header

This segment is used to head, identify and specify a message.

BGM - M 1 - Beginning of message

This segment is used to indicate the type and function of a message and to transmit the identifying number.

DTM - M 35 - Date/time/period

This segment is used to specify the date of the Order and, where required, requested dates concerning the delivery of the goods.

PAI - C 1 - Payment instructions

This segment is used to indicate payment instructions which may be used or imposed by the party issuing the order.

ALI - C 5 - Additional information

This segment is used to specify any additional information related to the complete order.

FTX - C 99 - Free text

This segment is used to provide free form or coded text information for the entire purchase order.

SG1 - C 9999 - **RFF-DTM**

A group of segments for giving references and where necessary, their dates, relating to the whole message e.g. contract number, import/export license number, reservation number.

RFF - M 1 - Reference

This segment is used to specify other references which relate to the transmission, for example, contract numbers, price list numbers, etc. The references given at this point are valid for the whole order unless superseded by references at line level.

DTM - C 5 - Date/time/period

This segment is used to specify dates relating to the references given in the preceding RFF segment.

SG2 - C 99 - **NAD-LOC-FII-SG3-SG4-SG5**

A group of segments identifying the parties with associated information.

NAD - M 1 - Name and address

This segment is used to identify the trading partners involved in the Order process. Identification of the buyer and supplier of goods and services is mandatory using DE's 3035 and C082. Additionally, the invoicee and/or delivery party should be specified if different to the buyer.

LOC - C 99 - Place/location identification

This segment is used to indicate any location related to the party specified in the NAD segment.

4. Segments Description

FII	- C	5	- Financial institution information This segment is used to identify financial institution information related to the party identified in the NAD segment.
SG3	- C	99	- **RFF** A group of segments giving references only relevant to the specified party rather than the whole order.
RFF	- M	1	- Reference This segment is used to specify reference numbers related to the party specified in the previous NAD segment.
SG4	- C	5	- **DOC** A group of segments identifying the documentary requirements of the specified party.
DOC	- M	1	- Document/message details
SG5	- C	5	- **CTA-COM** A group of segments giving contact details of the specific person or department within the party identified in the NAD segment.
CTA	- M	1	- Contact information This segment is used to identify contact details for the party specified in the previous NAD segment.
COM	- C	5	- Communication contact This segment identifies the communications number, and type of communications, for the person or department identified in the preceding CTA segment.
SG6	- C	5	- **TAX-MOA** A group of segments specifying tax related information.
TAX	- M	1	- Duty/tax/fee details This segment is used to indicate the type, category, and rate of tax for the order.
MOA	- C	1	- Monetary amount This segment is used to indicate tax amounts for the previous TAX segment.
SG7	- C	5	- **CUX-DTM** A group of segments specifying the currencies and related dates/periods valid for the whole order.
CUX	- M	1	- Currencies This segment is used to specify currency information for the complete order.
DTM	- C	5	- Date/time/period This segment is used to specify dates related to the previous CUX segment.
SG8	- C	10	- **PAT-DTM-PCD-SG9** A group of segments specifying the terms of payment applicable for the whole order.
PAT	- M	1	- Payment terms basis This segment is used by the issuer of the order to request special payment terms for the current order only.
DTM	- C	5	- Date/time/period This segment is used to specify any dates associated with the payment terms.
PCD	- C	1	- Percentage details This segment is used to specify percentages which will be allowed or charged if an invoice is not paid to terms.
SG9	- C	9999	- **MOA** A group of segments identifying related monetary amounts at the header level.

4. Segments Description

MOA - M 1 - Monetary amount

This segment is used to specify monetary values which will be allowed or charged if the invoice is not paid according to the payment terms.

SG10 - C 10 - **TDT-SG11**

A group of segments identifying the mode and means of transport, location and relevant dates and times for transportation, relating to the whole order.

TDT - M 1 - Details of transport

This segment is used to specify transport instructions for the whole Purchase Order, such as requesting an express transport service.

SG11 - C 10 - **LOC-DTM**

A group of segments giving the location and date/time information relative to the transportation.

LOC - M 1 - Place/location identification

This segment is used to specify any locations related to the TDT segment .

DTM - C 5 - Date/time/period

This segment is used to provide dates related to the transport details specified in the TDT segment.

SG12 - C 5 - **TOD-LOC**

A group of segments indicating the terms of delivery for the whole order.

TOD - M 1 - Terms of delivery or transport

This segment is used to specify the terms of delivery for the complete order.

LOC - C 2 - Place/location identification

This segment is used if the terms of delivery specified in the TOD segment requires the identification specifically of the place of delivery.

SG13 - C 99 - **PAC-SG14**

A group of segments identifying the packaging, physical dimensions and marks and numbers for goods referenced by the whole order.

PAC - M 1 - Package

This segment is used to specify the number and type of packages for the whole message.

SG14 - C 5 - **PCI-RFF-DTM-GIN**

A group of segments specifying the markings and labels on individual physical units.

PCI - M 1 - Package identification

This segment is used to identify markings on the packaging of the product being ordered.

RFF - C 1 - Reference

This segment is used to specify any references which relate to the package identification, e.g. master label number.

DTM - C 5 - Date/time/period

This segment is used to specify dates relating to the references given in the preceding RFF segment.

GIN - C 10 - Goods identity number

This segment is used to provide identification numbers relevant to the packaging unit and level identified in the PAC segment.

SG15 - C 10 - **EQD**

A group of segments providing information relating to equipment identification and ownership, relating to the whole order.

4. Segments Description

EQD - M 1 - Equipment details

This segment is used to provide information on equipment which will be used in the despatch of the products ordered.

SG19 - C 99 - **ALC-ALI-DTM-SG20-SG21-SG22-SG23-SG24**

A group of segments specifying allowances and charges for the whole order. Allowances and charges in the heading section of a message are independent from those in the detail section, e.g. ALC at detail level does not override ALC at heading level.

ALC - M 1 - Allowance or charge

This segment is used to specify any allowances or charges related to the complete order. If allowances and charges are applicable for a specific line item then they must be indicated using segment group 43.

ALI - C 5 - Additional information

This segment is used to indicate any special conditions related to the allowances and/or charges specified in the ALC segment.

DTM - C 5 - Date/time/period

This segment is used to indicate any dates related to the allowances or/charges information specified in the ALC segment.

SG20 - C 1 - **QTY-RNG**

A group of segments specifying the quantity of the allowance or charge with its measure unit specifier. A range to which the allowance or charge applies may be specified e.g. an allowance of a free quantity of 20 pieces may be specified if the goods quantity ordered is greater than 1000 pieces.

QTY - M 1 - Quantity

This segment is used to specify quantity allowance/charge information.

RNG - C 1 - Range details

This segment is used to specify ranges which apply to the previous QTY segment.

SG21 - C 1 - **PCD-RNG**

A group of segments specifying the percentage for the allowance or charge, e.g. The allowance/charge amount is calculated as 5% of the goods value or a price reduction of 5% may be specified if the goods quantity ordered is within the range 5 tons to 10 tons.

PCD - M 1 - Percentage details

This segment is used to specify percentage allowance/charge information.

RNG - C 1 - Range details

This segment is used to specify ranges which apply to the previous PCD segment.

SG22 - C 2 - **MOA-RNG**

A group of segments specifying a monetary amount for an allowance or charge. A range to which the allowance or charge applies can be specified e.g. an allowance of 5000 EUR may be specified if goods value ordered is greater than 100000 EUR.

MOA - M 1 - Monetary amount

This segment is used to specify monetary amount allowance/charge information.

RNG - C 1 - Range details

This segment is used to specify ranges which apply to the previous MOA segment.

SG23 - C 1 - **RTE-RNG**

A group of segments specifying the rate per unit and basis to which the allowance or charge applies e.g. the allowance/charge amount is 3 EUR per 10 tons.

RTE - M 1 - Rate details

This segment is used to specify rate allowance/charge information.

4. Segments Description

RNG - C 1 - Range details

This segment is used to specify ranges which apply to the previous RTE segment.

SG24 - C 5 - **TAX-MOA**

A group of segments specifying tax related information for the allowance or charge.

TAX - M 1 - Duty/tax/fee details

This segment is used to specify tax information related to the allowance or charge for the full message.

MOA - C 1 - Monetary amount

This segment is used to specify monetary amounts related to the tax segment.

Purchase Order Detail Section

SG28 - C 200000 - **LIN-PIA-IMD-MEA-QTY-ALI-DTM-MOA-GIN-QVR-FTX-SG32-SG33-SG34-SG37-SG38-SG39-SG43-SG49**

A group of segments providing details of the individual ordered items. This Segment group may be repeated to give sub-line details.

LIN - M 1 - Line item

This segment is used to identify the item being ordered.

PIA - C 25 - Additional product id

This segment is used to specify additional or substitutional item identification codes such as a buyer's, or seller's item number.

IMD - C 99 - Item description

This segment is used to describe the current line item.

MEA - C 99 - Measurements

This segment is used to specify the actual physical dimensions of the product being ordered where that product is sold in variable lengths or volumes.

QTY - C 99 - Quantity

This segment is used to specify the total quantity ordered for the current line identified in the LIN segment.

ALI - C 5 - Additional information

This segment is used to specify any additional information related to the current line item.

DTM - C 35 - Date/time/period

This segment is primarily used to specify the dates (and possibly times) associated with the delivery or collection of the currently identified product. Also other relevant dates may be specified.

MOA - C 10 - Monetary amount

This segment is used for two purposes, firstly, when allowances/charges are involved, to indicate net amounts for the line, and secondly, to provide valuation amounts, e.g., customs value.

GIN - C 1000 - Goods identity number

This segment is used to indicate printed numbers or the range of numbers to be printed on coupons or gift cheques.

QVR - C 1 - Quantity variances

This segment is used to specify quantity variances.

FTX - C 99 - Free text

This segment is used to specify any special requirements for the current line item.

4. Segments Description

SG32 - C 25	-	**PRI-CUX-DTM**
		A group of segments identifying the relevant pricing information for the goods or services ordered.
PRI - M 1	-	Price details
		This segment is used to detail the price for the current product identified in the LIN segment.
CUX - C 1	-	Currencies
		This segment is used to specify currency data related to the previous PRI segment.
DTM - C 5	-	Date/time/period
		This segment is used to specify the dates (and possibly times) associated with the price of the currently identified product.
SG33 - C 9999	-	**RFF-DTM**
		A group of segments giving references and where necessary, their dates, relating to the line item.
RFF - M 1	-	Reference
		This segment is used to identify references associated with the line item. This information may override what is specified in the heading section when the same qualifier is used. This segment may also be used to allocate a unique reference number to this line item in this order.
DTM - C 5	-	Date/time/period
		This segment is used to specify dates and times associated with the preceding RFF segment.
SG34 - C 99	-	**PAC-QTY-SG36**
		A group of segments identifying the packaging, physical dimensions, and marks and numbers for goods referenced in the line item.
PAC - M 1	-	Package
		This segment is used in those cases where despatch unit coding has not yet been implemented, not allowing direct ordering in LIN, yet requirements exist to define the despatch unit to be delivered.
QTY - C 5	-	Quantity
		This segment is used to specify the total quantity per pack.
SG36 - C 5	-	**PCI-RFF-DTM-GIN**
		A group of segments specifying the markings and labels on individual physical units.
PCI - M 1	-	Package identification
		This segment is used to detail markings and labels on individual packages or physical units.
RFF - C 1	-	Reference
		This segment is used to provide references associated with the PCI segment.
DTM - C 5	-	Date/time/period
		This segment is used to specify dates and times associated with the preceding RFF segment.
GIN - C 10	-	Goods identity number
		This segment is used to indicate numbers which are to be marked on packages for the line items in the message.
SG37 - C 9999	-	**LOC-QTY-DTM**
		A group of segments specifying destination and quantity details for consignments involving multi-destination deliveries.
LOC - M 1	-	Place/location identification
		This segment is used to identify the location of delivery for a split delivery order.

4. Segments Description

QTY - C 1 - Quantity

This segment is used to indicate the delivery quantity for the delivery location specified in the previous LOC segment. The total of all quantities specified in segment group 37 for the line, must equal the value for the total quantity detailed in the QTY segment at line level.

DTM - C 5 - Date/time/period

This segment is used to indicate the date/time on which the split delivery will take place to the location identified in the LOC segment.

SG38 - C 10 - **TAX-MOA**

A group of segments specifying tax related information.

TAX - M 1 - Duty/tax/fee details

This segment is used to identify the type and rate of tax that is applicable for the current line item. This segment is only used if the tax rate at line level differs from the rate specified in the header section.

MOA - C 1 - Monetary amount

This segment is used to indicate tax amounts related to the preceding TAX segment.

SG39 - C 999 - **NAD-SG42**

A group of segments identifying the parties with associated information, relevant to the line item only.

NAD - M 1 - Name and address

This segment is used to specify the ultimate (end) customer for the current line item, i.e., the party sending the order will in turn sell the goods to, the party on whose behalf the buyer is acting as an agent.

SG42 - C 5 - **CTA-COM**

A group of segments giving contact details of the specific person or department within the party identified in the NAD segment.

CTA - M 1 - Contact information

This segment is used to provide contact and communications information for the ultimate customer identified in the NAD segment.

COM - C 5 - Communication contact

This segment is used to identify the communications number and the type of communications used for the person or department identified in the CTA segment.

SG43 - C 99 - **ALC-ALI-DTM-SG44-SG45-SG46-SG47-SG48**

A group of segments specifying allowances and charges for the line item. Allowances and charges in the heading section of a message are independent from those in the detail section, e.g. ALC at detail level does not override ALC at heading level.

ALC - M 1 - Allowance or charge

This segment is used to specify any allowances or charges which are applicable for the current line item. If allowances and charges are applicable for the same line item they must be indicated using separate repeats of segment group 43.

ALI - C 5 - Additional information

This segment is used to indicate any special conditions related to the allowances and/or charges specified in the ALC segment.

DTM - C 5 - Date/time/period

This segment is used to indicate any dates related to the allowances or/charges information specified in the ALC segment.

4. Segments Description

SG44 - C 1 - **QTY-RNG**

A group of segments specifying the quantity of the allowance or charge with its measure unit specifier. A range to which the allowance or charge applies may be specified, e.g. an allowance of a free quantity of 20 pieces may be specified if the goods quantity ordered is greater than 1000 pieces.

QTY - M 1 - Quantity

This segment is used to specify quantity allowance/charge information.

RNG - C 1 - Range details

This segment is used to specify ranges which apply to the previous QTY segment.

SG45 - C 1 - **PCD-RNG**

A group of segments specifying the percentage for the allowance or charge e.g. The allowance/charge amount is calculated as 5% of the goods value or a price reduction of 5% may be specified if the goods quantity ordered is within the range 5 tons to 10 tons.

PCD - M 1 - Percentage details

This segment is used to specify percentage allowance/charge information.

RNG - C 1 - Range details

This segment is used to specify ranges which apply to the previous PCD segment.

SG46 - C 2 - **MOA-RNG**

A group of segments specifying a monetary amount for an allowance or charge. A range to which the allowance or charge applies can be specified e.g. an allowance of 5000 EUR may be specified if goods value ordered is greater than 100000 EUR.

MOA - M 1 - Monetary amount

This segment is used to specify monetary amount allowance/charge information.

RNG - C 1 - Range details

This segment is used to specify ranges which apply to the previous MOA segment.

SG47 - C 1 - **RTE-RNG**

A group of segments specifying the rate per unit and basis to which the allowance or charge applies e.g. The allowance/charge amount is 3 EUR per 10 tons.

RTE - M 1 - Rate details

This segment is used to specify rate allowance/charge information.

RNG - C 1 - Range details

This segment is used to specify ranges which apply to the previous RTE segment.

SG48 - C 5 - **TAX-MOA**

A group of segments specifying tax related information for the allowance or charge.

TAX - M 1 - Duty/tax/fee details

This segment is used to specify any taxes or duties which are related to the allowance or charge for the current line item.

MOA - C 1 - Monetary amount

This segment is used to specify monetary amounts related to the previous TAX segment.

SG49 - C 10 - **TDT**

A group of segments identifying the mode and means of transport, relating to the line item, where this is different to or not specified within the heading section.

TDT - M 1 - Details of transport

The TDT segment can be used to specify transport information for the line item, such as requesting an express transport service. It overrides any transport details specified in the TDT segment at the heading level of the message.

4. Segments Description

Purchase Order Summary Section

UNS - M 1	-	Section control This segment is used to separate the detail and summary sections of the message.
MOA - C 99	-	Monetary amount This segment is used to indicate total amounts for the order.
CNT - C 10	-	Control total This segment is used to provide message control totals.
UNT - M 1	-	Message trailer This segment is a mandatory UN/EDIFACT segment. It must always be the last segment in the message.
UNZ - M 1	-	Interchange trailer This segment is used to provide the trailer of an interchange.

5. Segments Layout

This section describes each segment used in the EANCOM® Purchase order message. The original EDIFACT segment layout is listed. The appropriate comments relevant to the EANCOM® subset are indicated.

Notes:

1. The segments are presented in the sequence in which they appear in the message. The segment or segment group tag is followed by the (M)andatory / (C)onditional indicator, the maximum number of occurrences and the segment description.

2. Reading from left to right, in column one, the data element tags and descriptions are shown, followed by in the second column the EDIFACT status (M or C), the field format, and the picture of the data elements. These first pieces of information constitute the original EDIFACT segment layout.

   Following the EDIFACT information, EANCOM® specific information is provided in the third, fourth, and fifth columns. In the third column a status indicator for the use of (C)onditional EDIFACT data elements (see 2.1 through 2.3 below), in the fourth column the restricted indicator (see point 3 on the following page), and in the fifth column notes and code values used for specific data elements in the message.

2.1 (M)andatory data elements in EDIFACT segments retain their status in EANCOM®.

2.2 Additionally, there are five types of status for data elements with a (C)onditional EDIFACT status, whether for simple, component or composite data elements. These are listed below and can be identified when relevant by the following abbreviations:

- REQUIRED	**R**	Indicates that the entity is required and must be sent.
- ADVISED	**A**	Indicates that the entity is advised or recommended.
- DEPENDENT	**D**	Indicates that the entity must be sent in certain conditions, as defined by the relevant explanatory note.
- OPTIONAL	**O**	Indicates that the entity is optional and may be sent at the discretion of the user.
- NOT USED	**N**	Indicates that the entity is not used and should be omitted.

2.3 If a composite is flagged as **N, NOT USED**, all data elements within that composite will have blank status indicators assigned to them.

3. Status indicators detailed in the fourth column which directly relate to the code values detailed in the fifth **column** may have two values:

- RESTRICTED	*****	A data element marked with an asterisk (*) in the fourth column indicates that the listed codes in column five are the only codes available for use with this data element, in this segment, in this message.
- OPEN		All data elements where coded representation of data is possible and a restricted set of code values is not indicated are open (no asterisk in fourth column). The available codes are listed in the EANCOM® Data Elements and Code Sets Directory. Code values may be given as examples or there may be a note on the format or type of code to be used.

4. Different colours are used for the code values in the segment details: restricted codes are in red and open codes in blue.

5. Segments Layout

Segment number: 1

UNA - C 1 - Service string advice					
Function: The service string advice shall begin with the upper case characters UNA immediately followed by six characters in the order shown below. The space character shall not be used in positions 010, 020, 040, 050 or 060. The same character shall not be used in more than one position of the UNA.					
		EDIFACT	GS1	*	Description
UNA1	Component data element separator	M an1	**M**	*	Used as a separator between component data elements contained within a composite data element (default value: ":")
UNA2	Data element separator	M an1	**M**	*	Used to separate two simple or composite data elements (default value: "+")
UNA3	Decimal mark	M an1	**M**	*	Used to indicate the character used for decimal notation (default value:".")
UNA4	Release character	M an1	**M**	*	Used to restore any service character to its original specification (value: "?").
UNA5	Repetition separator	M an1	**M**	*	Used to indicate the character used for repetition separation (value: " * ").
UNA6	Segment terminator	M an1	**M**	*	Used to indicate the end of segment data (default value: " ' ")
Segment Notes: This segment is used to inform the receiver of the interchange that a set of service string characters which are different to the default characters are being used. When using the default set of service characters, the UNA segment need not be sent. If it is sent, it must immediately precede the UNB segment and contain the four service string characters (positions UNA1, UNA2, UNA4 and UNA6) selected by the interchange sender. Regardless of whether or not all of the service string characters are being changed every data element within this segment must be filled, (i.e., if some default values are being used with user defined ones, both the default and user defined values must be specified). When expressing the service string characters in the UNA segment, it is not necessary to include any element separators. The use of the UNA segment is required when using a character set other than level A. UNA:+.?*'					

5. Segments Layout

Segment number: 2

UNB - M 1 - Interchange header

Function:

To identify an interchange.

Notes:
1. S001/0002, shall be '4' to indicate this version of the syntax.
2. The combination of the values carried in data elements S002, S003 and 0020 shall be used to identify uniquely the interchange, for the purpose of acknowledgement.

		EDIFACT	GS1	*	Description
S001	SYNTAX IDENTIFIER	M	**M**		See Part I chapter 5.2.7 and segment notes.
0001	Syntax identifier	M a4	**M**	*	UNOA = UN/ECE level A UNOB = UN/ECE level B UNOC = UN/ECE level C UNOD = UN/ECE level D UNOE = UN/ECE level E UNOF = UN/ECE level F UNOG = UN/ECE level G UNOH = UN/ECE level H UNOI = UN/ECE level I UNOJ = UN/ECE level J UNOK = UN/ECE level K UNOW = UN/ECE level W UNOX = UN/ECE level X UNOY = UN/ECE level Y
0002	Syntax version number	M an1	**M**	*	4 = Version 4
0080	Service code list directory version number	C an..6	**N**		
0133	Character encoding, coded	C an..3	**N**		
S002	INTERCHANGE SENDER	M	**M**		
0004	Interchange sender identification	M an..35	**M**		GLN (n13)
0007	Identification code qualifier	C an..4	**R**	*	14 = GS1
0008	Interchange sender internal identification	C an..35	**O**		
0042	Interchange sender internal sub-identification	C an..35	**N**		
S003	INTERCHANGE RECIPIENT	M	**M**		
0010	Interchange recipient identification	M an..35	**M**		GLN (n13)
0007	Identification code qualifier	C an..4	**R**	*	14 = GS1
0014	Interchange recipient internal identification	C an..35	**O**		
0046	Interchange recipient internal sub-identification	C an..35	**N**		
S004	DATE AND TIME OF PREPARATION	M	**M**		
0017	Date	M n8	**M**		CCYYMMDD
0019	Time	M n4	**M**		HHMM
0020	Interchange control reference	M an..14	**M**		Unique reference identifying the interchange. Created

5. Segments Layout

Segment number: 2

		EDIFACT	GS1	*	Description
					by the interchange sender.
S005	RECIPIENT REFERENCE/ PASSWORD DETAILS	C	**O**		
0022	Recipient reference/password	M an..14	**M**		
0025	Recipient reference/password qualifier	C an2	**O**		
0026	Application reference	C an..14	**O**		Message identification if the interchange contains only one type of message.
0029	Processing priority code	C a1	**O**		A = Highest priority
0031	Acknowledgement request	C n1	**O**		1 = Requested
0032	Interchange agreement identifier	C an..35	**O**	*	EANCOM.....
0035	Test indicator	C n1	**O**		1 = Interchange is a test

Segment Notes:

This segment is used to envelope the interchange, as well as to identify both, the party to whom the interchange is sent and the party who has sent the interchange. The principle of the UNB segment is the same as a physical envelope which covers one or more letters or documents, and which details, both the address where delivery is to take place and the address from where the envelope has come.
S001: The character encoding specified in basic code table of ISO/IEC 646 (7-bit coded character set for information interchange) shall be used for the interchange service string advice (if used) and up to and including the composite data element S001 'Syntax identifier' in the interchange header. The character repertoire used for the characters in an interchange shall be identified from the code value of data element 0001 in S001 'Syntax identifier' in the interchange header. The character repertoire identified does not apply to objects and/or encrypted data.
The default encoding technique for a particular repertoire shall be the encoding technique defined by its associated character set specification.
DE 0001: The recommended (default) character set for use in EANCOM® for international exchanges is character set A (UNOA). Should users wish to use character sets other than A, an agreement on which set to use should be reached on a bilateral basis before communications begin.
DE 0004, 0008, 0010 and 0014: Within EANCOM® the use of the Global Location Number (GLN) is recommended for the identification of the interchange sender and recipient.
DE 0008: Identification (e.g. a division) specified by the sender of the interchange, to be included if agreed, by the recipient in response interchanges, to facilitate internal routing.
DE 0014: The address for routing, provided beforehand by the interchange recipient, is used by the interchange sender to inform the recipient of the internal address, within the latter's systems, to which the interchange should be routed. It is recommended that the GLN be used for this purpose.
DE 0007: Identification (e.g. a division) specified by the recipient of the interchange, to be included if agreed, by the sender in response interchanges, to facilitate internal routing.
DE S004: The date and time specified in this composite should be the date and time at which the interchange sender prepared the interchange. This date and time may not necessarily be the same as the date and time of contained messages.
DE 0020: The interchange control reference number is generated by the interchange sender and is used to identify uniquely each interchange. Should the interchange sender wish to re-use interchange control reference numbers, it is recommended that each number be preserved for at least a period of three months before being re-used. In order to guarantee uniqueness, the interchange control reference number should always be linked to the interchange sender's identification (DE 0004).
DE S005: The use of passwords must first be agreed bilaterally by the parties exchanging the interchange.
DE 0026: This data element is used to identify the application, on the interchange recipient's system, to which the interchange is directed. This data element may only be used if the interchange contains only one type of message, (e.g. only invoices). The reference used in this data element is assigned by the interchange sender.
DE 0031: This data element is used to indicate whether an acknowledgement to the interchange is required. The EANCOM® APERAK or CONTRL message should be used to provide acknowledgement of interchange receipt. In addition, the EANCOM® CONTRL message may be used to indicate when an interchange has been rejected

5. Segments Layout

Segment number: 2

due to syntax errors.
DE 0032: This data element is used to identify any underlying agreements which control the exchange of data. Within EANCOM® , the identity of such agreements must start with the letters 'EANCOM', the remaining characters within the data element being filled according to bilateral agreements.

UNB+UNOC:4+5412345678908:14+8798765432106:14+20020102:1000+12345555+++++EANCOMREF 52'

5. Segments Layout

Segment number: 3

UNH - M 1 - Message header

Function:

To head, identify and specify a message.

Notes:
1. Data element S009/0057 is retained for upward compatibility. The use of S016 and/or S017 is encouraged in preference.
2. The combination of the values carried in data elements 0062 and S009 shall be used to identify uniquely the message within its group (if used) or if not used, within its interchange, for the purpose of acknowledgement.

		EDIFACT	GS1	*	Description
0062	Message reference number	M an..14	**M**		Sender's unique message reference. Sequence number of the messages in the interchange. DE 0062 in the UNT will be exactly the same. Sender generated.
S009	MESSAGE IDENTIFIER	M	**M**		
0065	Message type	M an..6	**M**	*	ORDERS = Purchase order message
0052	Message version number	M an..3	**M**	*	D = Draft version/UN/EDIFACT Directory
0054	Message release number	M an..3	**M**	*	01B = Release 2001 - B
0051	Controlling agency, coded	M an..3	**M**	*	UN = UN/CEFACT
0057	Association assigned code	C an..6	**R**	*	EAN011 = GS1 version control number (GS1 Permanent Code) Indicates that the message is the EANCOM version 010 of the UNSM Purchase Order.
0110	Code list directory version number	C an..6	**O**		This data element can be used to identify the codelist agreed by the interchange partners, e.g. EAN001 = EANCOM 2002 S4 codelist released on 01.12.2002 by GS1.
0113	Message type sub-function identification	C an..6	**N**		
0068	Common access reference	C an..35	**N**		
S010	STATUS OF THE TRANSFER	C	**N**		
0070	Sequence of transfers	M n..2			
0073	First and last transfer	C a1			
S016	MESSAGE SUBSET IDENTIFICATION	C	**N**		
0115	Message subset identification	M an..14			
0116	Message subset version number	C an..3			
0118	Message subset release number	C an..3			
0051	Controlling agency, coded	C an..3			
S017	MESSAGE IMPLEMENTATION GUIDELINE IDENTIFICATION	C	**N**		
0121	Message implementation guideline identification	M an..14			
0122	Message implementation guideline version number	C an..3			

5. Segments Layout

Segment number: 3

		EDIFACT	GS1	*	Description
0124	Message implementation guideline release number	C an..3			
0051	Controlling agency, coded	C an..3			
S018	SCENARIO IDENTIFICATION	C	**N**		
0127	Scenario identification	M an..14			
0128	Scenario version number	C an..3			
0130	Scenario release number	C an..3			
0051	Controlling agency, coded	C an..3			

Segment Notes:

This segment is used to head, identify and specify a message.
DE's 0065, 0052, 0054, and 0051: Indicate that the message is an UNSM Purchase Order based on the D.01B directory under the control of the United Nations.

Example:
UNH+ME000001+ORDERS:D:01B:UN:EAN010'

5. Segments Layout

Segment number: 4

BGM - M 1 - Beginning of message					
Function: To indicate the type and function of a message and to transmit the identifying number.					
		EDIFACT	GS1	*	Description
C002	DOCUMENT/MESSAGE NAME	C	**R**		
1001	Document name code	C an..3	**R**	*	220 = Order 221 = Blanket order 224 = Rush order 225 = Repair order 226 = Call off order 227 = Consignment order 258 = Standing order 237 = Cross docking services order 400 = Exceptional order 401 = Transshipment order 402 = Cross docking order 725 = Manufacturer raised order 726 = Manufacturer raised consignment order 898 = Pre-packed cross docking consignment order YC1 = Consumer pickup order (GS1 Permanent Code) YC2 = Consumer home delivery order (GS1 Permanent Code) When applicable it is recommended to use the more descriptive document name code for an order instead of the general 220 Purchase Order value. All references other than the document number DE 1004 are in the RFF segment.
1131	Code list identification code	C an..17	**N**		
3055	Code list responsible agency code	C an..3	**D**	*	9 = GS1 This dataelement must only be used if DE 1001 contains an GS1 Code.
1000	Document name	C an..35	**O**		
C106	DOCUMENT/MESSAGE IDENTIFICATION	C	**R**		
1004	Document identifier	C an..35	**R**		Order Number assigned by document sender. For global unique identification of documents Global Document Type Identifier (GDTI) is available.
1056	Version identifier	C an..9	**N**		
1060	Revision identifier	C an..6	**O**		
1225	Message function code	C an..3	**R**	*	5 = Replace 6 = Confirmation 7 = Duplicate 9 = Original 16 = Proposal 29 = Accepted without amendment 31 = Copy 42 = Confirmation via specific means 46 = Provisional The message function, coded is a critical data element in this segment. It applies to all data indicated in the message. The following definitions apply for the

5. Segments Layout

Segment number: 4

	EDIFACT	GS1	*	Description
				restricted codes: 5 = Replace - To cancel and replace a previously sent message identified in the RFF segment. When a buyer issues a pro-forma invoice to cover a transaction the supplier on receipt of this pro-forma issues a replacement to take its place. 6 = Confirmation - A confirmation of a previously sent proposal or suggested order where such confirmation is required or recommended under the terms of a trading partner agreement. 7 = Duplicate - A re-transmission involving the same parties, on the specific request of the receiver. 9 = Original - An original transmission of a purchase order. 16 = Proposal - A proposed or suggested order. 31 = Copy - A copy of an order for a third party for information purposes. 42 = Confirmation via specific means - A confirmation of a previous order sent by means other than EDI, e. g., Fax. 46 = Provisional - A provisional order.
4343 Response type code	C an..3	**D**	*	AC = Acknowledge - with detail and change AB = Message acknowledgement AI = Acknowledge only changes NA = No acknowledgement needed This DE is used if the order issuer wishes to explicitly indicate whether an acknowledgement is required or not.

Segment Notes:

This segment is used to indicate the type and function of a message and to transmit the identifying number.

Example:
BGM+220+128576+9'

5. Segments Layout

Segment number: 5

DTM - M 35 - Date/time/period

Function:

To specify date, and/or time, or period.

		EDIFACT	GS1	*	Description
C507	DATE/TIME/PERIOD	M	**M**		
2005	Date or time or period function code qualifier	M an..3	**M**	*	2 = Delivery date/time, requested 10 = Shipment date/time, requested 11 = Despatch date and/or time 15 = Promotion start date/time 37 = Ship not before date/time 38 = Ship not later than date/time 61 = Cancel if not delivered by this date 63 = Delivery date/time, latest 64 = Delivery date/time, earliest 69 = Delivery date/time, promised for 76 = Delivery date/time, scheduled for 137 = Document/message date/time 200 = Pick-up/collection date/time of cargo 235 = Collection date/time, latest 263 = Invoicing period 273 = Validity period 282 = Confirmation date lead time 383 = Cancel if not shipped by this date X14 = Requested for delivery week commencing (GS1 Temporary Code) Code value 15 should only be used in this position in the message where no promotion reference exists or is not yet available. By including code 235, it will enable the user to support a new concept called Primary Freight, where the buyer is responsible for the pick up of goods from the supplier. This will enable the buyer to specify the latest time (up to this particular date/time) the supplier has to get the goods ready to be collected by.
2380	Date or time or period value	C an..35	**R**		
2379	Date or time or period format code	C an..3	**R**		102 = CCYYMMDD 203 = CCYYMMDDHHMM 616 = CCYYWW 718 = CCYYMMDD-CCYYMMDD

Segment Notes:

This segment is used to specify the date of the Order and, where required, requested dates concerning the delivery of the goods.
DE 2005: Identification of the 'Document/message date/time' (code value 137) is mandatory in an EANCOM message.

Example:
DTM+137:20020830:102'
This example dates the message as the 30th of August 2002.

DTM+2:20021001:102'
This example requests delivery on the 1st of October 2002.

DTM+63:200210181430:203'
This example indicates that the latest date/time for the delivery is 2:30pm on the 18th of October 2002.

5. Segments Layout

Segment number: 6

PAI	- C	1 - Payment instructions			
Function: To specify the instructions for payment.					
		EDIFACT	GS1	*	Description
C534	PAYMENT INSTRUCTION DETAILS	M	**M**		
4439	Payment conditions code	C an..3	**O**		1 = Direct payment OA = Open account (GS1 Temporary Code)
4431	Payment guarantee means code	C an..3	**O**		20 = Goods as security
4461	Payment means code	C an..3	**O**		42 = Payment to bank account 60 = Promissory note 70 = Bill drawn by the creditor on the debtor 10E = Payment terms defined in the Commercial Account Summary (GS1 Temporary Code)
1131	Code list identification code	C an..17	**O**		
3055	Code list responsible agency code	C an..3	**D**		
4435	Payment channel code	C an..3	**O**		1 = Ordinary post

Segment Notes:

This segment is used to indicate payment instructions which may be used or imposed by the party issuing the order.

Example:
PAI+::42'

5. Segments Layout

Segment number: 7

ALI	- C	5 - Additional information			
Function: To indicate that special conditions due to the origin, customs preference, fiscal or commercial factors are applicable.					
		EDIFACT	GS1	*	Description
3239	Country of origin name code	C an..3	**O**		Use ISO 3166 2 alpha code
9213	Duty regime type code	C an..3	**O**		
4183	Special condition code	C an..3	**O**		136 = Buying group conditions 137 = Cancel order unless complete delivery possible on requested date and or time 142 = Invoiced but not replenished 143 = Replenished but not invoiced 144 = Deliver full order 73E = Delivery subject to final authorization (GS1 Temporary Code)
4183	Special condition code	C an..3	**O**		
4183	Special condition code	C an..3	**O**		
4183	Special condition code	C an..3	**O**		
4183	Special condition code	C an..3	**O**		
Segment Notes: This segment is used to specify any additional information related to the complete order. Example: ALI+++136'					

5. Segments Layout

Segment number: 8

FTX	- C	99 - Free text			
Function: To provide free form or coded text information.					
		EDIFACT	GS1	*	Description
4451	Text subject code qualifier	M an..3	**M**		PUR = Purchasing information ZZZ = Mutually defined
4453	Free text function code	C an..3	**O**	*	1 = Text for subsequent use 3 = Text for immediate use
C107	TEXT REFERENCE	C	**D**		References to a standard text. This composite is only used when trading partners have agreed to use mutually defined code values.
4441	Free text value code	M an..17	**M**		001 = ...standard text...
1131	Code list identification code	C an..17	**O**		
3055	Code list responsible agency code	C an..3	**D**		91 = Assigned by supplier or supplier's agent 92 = Assigned by buyer or buyer's agent
C108	TEXT LITERAL	C	**D**		This composite is only used if coded text can not be used.
4440	Free text value	M an..512	**M**		
4440	Free text value	C an..512	**O**		
4440	Free text value	C an..512	**O**		
4440	Free text value	C an..512	**O**		
4440	Free text value	C an..512	**O**		
3453	Language name code	C an..3	**D**		ISO 639 two alpha code This data element is only used when non coded free text has been provided in data element C108.
4447	Free text format code	C an..3	**N**		

Segment Notes:

This segment is used to provide free form or coded text information for the entire purchase order.
Use of this segment in free form is not recommended since it may inhibit automatic processing of the Order.
Coded references to standard texts is an available functionality which enables automatic processing and reduces transmission and processing overheads. Standard texts should be mutually defined among trading partners and can be used to cover legal and other requirements.

Example:
FTX+ZZZ+1+001::91'
(e.g. standard text code 001=Special prices effective first of month)

5. Segments Layout

Segment number: 9

SG1	- C	9999	-	RFF-DTM
RFF	- M	1	-	Reference

Function:

To specify a reference.

		EDIFACT	GS1	*	Description
C506	REFERENCE	M	**M**		
1153	Reference code qualifier	M an..3	**M**		AE = Authorization for expense (AFE) number AKO = Action authorization number ANJ = Authorization number BO = Blanket order number CR = Customer reference number CT = Contract number IP = Import licence number ON = Order number (buyer) PD = Promotion deal number PL = Price list number UC = Ultimate customer's reference number VN = Order number (supplier)
1154	Reference identifier	C an..70	**R**		
1156	Document line identifier	C an..6	**O**		
4000	Reference version identifier	C an..35	**N**		
1060	Revision identifier	C an..6	**N**		

Segment Notes:

This segment is used to specify other references which relate to the transmission, for example, contract numbers, price list numbers, etc. The references given at this point are valid for the whole order unless superseded by references at line level.

Example:
RFF+CT:652744'
RFF+PL:AUG2002'

5. Segments Layout

Segment number: 10

SG1	- C	9999	-	RFF-DTM
DTM	- C	5	-	Date/time/period

Function:

To specify date, and/or time, or period.

		EDIFACT	GS1	*	Description
C507	DATE/TIME/PERIOD	M	**M**		
2005	Date or time or period function code qualifier	M an..3	**M**	*	171 = Reference date/time
2380	Date or time or period value	C an..35	**R**		
2379	Date or time or period format code	C an..3	**R**		102 = CCYYMMDD

Segment Notes:

This segment is used to specify dates relating to the references given in the preceding RFF segment.

Example:
DTM+171:20020825:102'

5. Segments Layout

Segment number: 11

SG2	- C	99 -	NAD-LOC-FII-SG3-SG4-SG5
NAD	- M	1 -	Name and address

Function:

To specify the name/address and their related function, either by C082 only and/or unstructured by C058 or structured by C080 thru 3207.

		EDIFACT	GS1	*	Description
3035	Party function code qualifier	M an..3	**M**		BY = Buyer CO = Corporate office DP = Delivery party IV = Invoicee SN = Store number SR = Supplier's agent/representative SU = Supplier WH = Warehouse keeper
C082	PARTY IDENTIFICATION DETAILS	C	**A**		
3039	Party identifier	M an..35	**M**		GLN -Format n13
1131	Code list identification code	C an..17	**N**		
3055	Code list responsible agency code	C an..3	**R**	*	9 = GS1
C058	NAME AND ADDRESS	C	**O**		This composite may only be used to fulfill the requirements of directive 2003/58/EC, article 4.
3124	Name and address description	M an..35	**M**		
3124	Name and address description	C an..35	**O**		
3124	Name and address description	C an..35	**O**		
3124	Name and address description	C an..35	**O**		
3124	Name and address description	C an..35	**O**		
C080	PARTY NAME	C	**D**		
3036	Party name	M an..35	**M**		Party Name in clear text.
3036	Party name	C an..35	**O**		
3036	Party name	C an..35	**O**		
3036	Party name	C an..35	**O**		
3036	Party name	C an..35	**O**		
3045	Party name format code	C an..3	**O**		
C059	STREET	C	**D**		
3042	Street and number or post office box identifier	M an..35	**M**		Building Name/Number and Street
3042	Street and number or post office box identifier	C an..35	**O**		Name and/or P.O. Box.
3042	Street and number or post office box identifier	C an..35	**O**		
3042	Street and number or post office box identifier	C an..35	**O**		
3164	City name	C an..35	**D**		City/Town name, clear text
C819	COUNTRY SUB-ENTITY DETAILS	C	**D**		

5. Segments Layout

Segment number: 11

		EDIFACT	GS1	*	Description
3229	Country sub-entity name code	C an..9	**O**		
1131	Code list identification code	C an..17	**O**		
3055	Code list responsible agency code	C an..3	**O**		
3228	Country sub-entity name	C an..70	**O**		County/State, clear text.
3251	Postal identification code	C an..17	**D**		Postal Code
3207	Country name code	C an..3	**D**		ISO 3166 two alpha code

Segment Notes:

This segment is used to identify the trading partners involved in the Order process. Identification of the buyer and supplier of goods and services is mandatory using DE's 3035 and C082. Additionally, the invoicee and/or delivery party should be specified if different to the buyer.
The delivery address given in NAD at header level is the main delivery address for all line items. It can however be overridden at line level by the use of Segment Group 37 LOC/QTY/DTM to indicate split deliveries. If specific information is needed for this address such as Dock Number, etc, it must be provided in the following LOC segment using DE 3227.

Example:
NAD+BY+5412345000013::9'
NAD+SU+4012345500004::9'
NAD+DP+5412345000013::9'

Dependency Notes:
The following composites and data elements are only used when a coded name and address can not be used or there is a requirement to furnish the full name and address for the trading party. The affected composites and data elements are as follows:
C080 - C059 - 3164 - C819 - 3251 - 3207

5. Segments Layout

Segment number: 12

SG2	- C	99 -	NAD-LOC-FII-SG3-SG4-SG5
LOC	- C	99 -	Place/location identification

Function:

To identify a place or a location and/or related locations.

		EDIFACT	GS1	*	Description
3227	Location function code qualifier	M an..3	**M**	*	7 = Place of delivery
C517	LOCATION IDENTIFICATION	C	**A**		
3225	Location name code	C an..25	**A**		GLN - Format n13
1131	Code list identification code	C an..17	**O**		
3055	Code list responsible agency code	C an..3	**D**		9 = GS1 DE 3055 must be used if DE 3225 is used and does not contain an UN/LOCODE.
3224	Location name	C an..256	**O**		
C519	RELATED LOCATION ONE IDENTIFICATION	C	**N**		
3223	First related location name code	C an..25			
1131	Code list identification code	C an..17			
3055	Code list responsible agency code	C an..3			
3222	First related location name	C an..70			
C553	RELATED LOCATION TWO IDENTIFICATION	C	**N**		
3233	Second related location name code	C an..25			
1131	Code list identification code	C an..17			
3055	Code list responsible agency code	C an..3			
3232	Second related location name	C an..70			
5479	Relation code	C an..3	**N**		

Segment Notes:

This segment is used to indicate any location related to the party specified in the NAD segment.
It is recommended that GLN be used for the identification of all locations.

Example:
LOC+7+5412345678908::9'

5. Segments Layout

Segment number: 13

SG2	- C	99 -	NAD-LOC-FII-SG3-SG4-SG5
FII	- C	5 -	Financial institution information

Function:

To identify an account and a related financial institution.

		EDIFACT	GS1	*	Description
3035	Party function code qualifier	M an..3	**M**		BF = Beneficiary's bank
C078	ACCOUNT HOLDER IDENTIFICATION	C	**R**		
3194	Account holder identifier	C an..35	**R**		
3192	Account holder name	C an..35	**O**		
3192	Account holder name	C an..35	**O**		
6345	Currency identification code	C an..3	**O**		
C088	INSTITUTION IDENTIFICATION	C	**O**		
3433	Institution name code	C an..11	**A**		
1131	Code list identification code	C an..17	**O**		25 = Bank identification
3055	Code list responsible agency code	C an..3	**D**		5 = ISO (International Organization for Standardization)
3434	Institution branch identifier	C an..17	**O**		
1131	Code list identification code	C an..17	**O**		
3055	Code list responsible agency code	C an..3	**D**		
3432	Institution name	C an..70	**O**		
3436	Institution branch location name	C an..70	**O**		
3207	Country name code	C an..3	**O**		

Segment Notes:

This segment is used to identify financial institution information related to the party identified in the NAD segment.

Example:
FII+BF+22065712+KREDBEBB:25:5'

5. Segments Layout

Segment number: 14

SG2	- C	99	-	NAD-LOC-FII-SG3-SG4-SG5
SG3	- C	99	-	RFF
RFF	- M	1	-	Reference

Function:

To specify a reference.

		EDIFACT	GS1	*	Description
C506	REFERENCE	M	**M**		
1153	Reference code qualifier	M an..3	**M**	*	ADE = Account number AMT = Goods and Services Tax identification number FC = Fiscal number GN = Government reference number IA = Internal vendor number IT = Internal customer number TL = Tax exemption licence number VA = VAT registration number YC1 = Additional party identification (GS1 Temporary Code)
1154	Reference identifier	C an..70	**R**		
1156	Document line identifier	C an..6	**N**		
4000	Reference version identifier	C an..35	**N**		
1060	Revision identifier	C an..6	**N**		

Segment Notes:

This segment is used to specify reference numbers related to the party specified in the previous NAD segment.

Example:
RFF+VA:87765432'

5. Segments Layout

Segment number: 15

SG2	- C	99 -	NAD-LOC-FII-SG3-SG4-SG5
SG4	- C	5 -	DOC
DOC	- M	1 -	Document/message details

Function:

To identify documents and details directly related to it.

		EDIFACT	GS1	*	Description
C002	DOCUMENT/MESSAGE NAME	M	**M**		
1001	Document name code	C an..3	**R**		270 = Delivery note
1131	Code list identification code	C an..17	**N**		
3055	Code list responsible agency code	C an..3	**N**		
1000	Document name	C an..35	**N**		
C503	DOCUMENT/MESSAGE DETAILS	C	**C**		
1004	Document identifier	C an..35	**C**		
1373	Document status code	C an..3	**N**		
1366	Document source description	C an..70	**N**		
3453	Language name code	C an..3	**C**		
1056	Version identifier	C an..9	**C**		
1060	Revision identifier	C an..6	**N**		
3153	Communication medium type code	C an..3	**N**		
1220	Document copies required quantity	C n..2	**N**		
1218	Document originals required quantity	C n..2	**N**		

Segment Notes:

5. Segments Layout

Segment number: 16

SG2	- C	99 -	NAD-LOC-FII-SG3-SG4-SG5
SG5	- C	5 -	CTA-COM
CTA	- M	1 -	Contact information

Function:

To identify a person or a department to whom communication should be directed.

		EDIFACT	GS1	*	Description
3139	Contact function code	C an..3	**R**		BJ = Department or person responsible for processing purchase order BO = After business hours contact IC = Information contact OC = Order contact PD = Purchasing contact SR = Sales representative or department
C056	DEPARTMENT OR EMPLOYEE DETAILS	C	**O**		
3413	Department or employee name code	C an..17	**O**		
3412	Department or employee name	C an..35	**O**		

Segment Notes:

This segment is used to identify contact details for the party specified in the previous NAD segment.
The GLN - Format n13 - is particularly suitable for this purpose.

Example:
CTA+OC+:P FORGET'

5. Segments Layout

Segment number: 17

SG2	- C	99	-	NAD-LOC-FII-SG3-SG4-SG5
SG5	- C	5	-	CTA-COM
COM	- C	5	-	Communication contact

Function:

To identify a communication number of a department or a person to whom communication should be directed.

		EDIFACT	GS1	*	Description
C076	COMMUNICATION CONTACT	M	**M**		
3148	Communication address identifier	M an..512	**M**		
3155	Communication address code qualifier	M an..3	**M**		AO = Uniform Resource Location (URL) EM = Electronic mail TE = Telephone

Segment Notes:

This segment identifies the communications number, and type of communications, for the person or department identified in the preceding CTA segment.

Example:
COM+003222271020:TE'

5. Segments Layout

Segment number: 18

SG6	- C	5 - TAX-MOA
TAX	- M	1 - Duty/tax/fee details

Function:

To specify relevant duty/tax/fee information.

		EDIFACT	GS1	*	Description
5283	Duty or tax or fee function code qualifier	M an..3	**M**		5 = Customs duty 7 = Tax
C241	DUTY/TAX/FEE TYPE	C	**D**		
5153	Duty or tax or fee type name code	C an..3	**O**		GST = Goods and services tax VAT = Value added tax
1131	Code list identification code	C an..17	**O**		
3055	Code list responsible agency code	C an..3	**D**		
5152	Duty or tax or fee type name	C an..35	**O**		
C533	DUTY/TAX/FEE ACCOUNT DETAIL	C	**O**		
5289	Duty or tax or fee account code	M an..6	**M**		
1131	Code list identification code	C an..17	**O**		
3055	Code list responsible agency code	C an..3	**D**		
5286	Duty or tax or fee assessment basis value	C an..15	**O**		
C243	DUTY/TAX/FEE DETAIL	C	**A**		
5279	Duty or tax or fee rate code	C an..7	**O**		
1131	Code list identification code	C an..17	**O**		
3055	Code list responsible agency code	C an..3	**D**		
5278	Duty or tax or fee rate	C an..17	**R**		
5273	Duty or tax or fee rate basis code	C an..12	**O**		
1131	Code list identification code	C an..17	**O**		
3055	Code list responsible agency code	C an..3	**D**		
5305	Duty or tax or fee category code	C an..3	**D**		A = Mixed tax rate E = Exempt from tax S = Standard rate
3446	Party tax identifier	C an..20	**O**		
1227	Calculation sequence code	C an..3	**N**		

Segment Notes:

This segment is used to indicate the type, category, and rate of tax for the order.

Example:
TAX+7+VAT+++:::21+S'

Dependency Notes:
DE C241, and 5305: Tax types and categories will vary from country to country. They should be defined by

5. Segments Layout

Segment number: 18

national guidelines.

5. Segments Layout

Segment number: 19

SG6	- C	5 - TAX-MOA
MOA	- C	1 - Monetary amount

Function:

To specify a monetary amount.

		EDIFACT	GS1	*	Description
C516	MONETARY AMOUNT	M	**M**		
5025	Monetary amount type code qualifier	M an..3	**M**		124 = Tax amount 125 = Taxable amount
5004	Monetary amount	C n..35	**R**		
6345	Currency identification code	C an..3	**N**		
6343	Currency type code qualifier	C an..3	**N**		
4405	Status description code	C an..3	**N**		

Segment Notes:

This segment is used to indicate tax amounts for the previous TAX segment.

Example:
MOA+124:154.54'

5. Segments Layout

Segment number: 20

SG7	- C	5 -	CUX-DTM
CUX	- M	1 -	Currencies

Function:

To specify currencies used in the transaction and relevant details for the rate of exchange.

		EDIFACT	GS1	*	Description
C504	CURRENCY DETAILS	C	**R**		
6347	Currency usage code qualifier	M an..3	**M**	*	2 = Reference currency
6345	Currency identification code	C an..3	**R**		ISO 4217 three alpha.
6343	Currency type code qualifier	C an..3	**R**	*	4 = Invoicing currency 9 = Order currency 10 = Pricing currency 11 = Payment currency 12 = Quotation currency
6348	Currency rate value	C n..4	**N**		
C504	CURRENCY DETAILS	C	**D**		The second occurrence of this composite is only used if a target currency is being specified.
6347	Currency usage code qualifier	M an..3	**M**	*	3 = Target currency
6345	Currency identification code	C an..3	**R**		ISO 4217 three alpha.
6343	Currency type code qualifier	C an..3	**R**	*	4 = Invoicing currency 9 = Order currency 10 = Pricing currency 11 = Payment currency 12 = Quotation currency
6348	Currency rate value	C n..4	**O**		
5402	Currency exchange rate	C n..12	**D**		The rate of exchange is only used if a target currency has been identified in the second occurrence of C504.
6341	Exchange rate currency market identifier	C an..3	**N**		

Segment Notes:

This segment is used to specify currency information for the complete order.
The CUX segment is mandatory for international exchanges.
When specifying Reference and Target Currencies for international trade, one occurrence of CUX is all that is required. The reference currency is identified in the first occurrence of composite C504, with the target currency specified in the second occurrence of C504. The rate of exchange between the two is detailed in DE 5402.
The general rule for calculating the rate of exchange is as follows:
Reference Currency multiplied by Rate = Target Currency.

Example:
CUX+2:EUR:9'

CUX+2:EUR:9+3:USD:4+0.90243'

5. Segments Layout

Segment number: 21

SG7	- C	5 -	CUX-DTM
DTM	- C	5 -	Date/time/period

Function:

To specify date, and/or time, or period.

		EDIFACT	GS1	*	Description
C507	DATE/TIME/PERIOD	M	**M**		
2005	Date or time or period function code qualifier	M an..3	**M**	*	134 = Rate of exchange date/time 194 = Start date/time 206 = End date/time
2380	Date or time or period value	C an..35	**R**		
2379	Date or time or period format code	C an..3	**R**		102 = CCYYMMDD 203 = CCYYMMDDHHMM

Segment Notes:

This segment is used to specify dates related to the previous CUX segment.

Example:
DTM+134:20020801:102'

5. Segments Layout

Segment number: 22

SG8	- C	10 -	PAT-DTM-PCD-SG9
PAT	- M	1 -	Payment terms basis

Function:

To specify the payment terms basis.

Notes:
1. This segment will be removed effective with directory D.02B.

		EDIFACT	GS1	*	Description
4279	Payment terms type code qualifier	M an..3	**M**		1 = Basic 3 = Fixed date 7 = Extended 20 = Penalty terms 22 = Discount
C110	PAYMENT TERMS	C	**O**		
4277	Payment terms description identifier	M an..17	**M**		1 = Draft(s) drawn on issuing bank 2 = Draft(s) drawn on advising bank 3 = Draft(s) drawn on reimbursing bank 4 = Draft(s) drawn on applicant 5 = Draft(s) drawn on any other drawee 6 = No drafts
1131	Code list identification code	C an..17	**O**		
3055	Code list responsible agency code	C an..3	**D**		91 = Assigned by supplier or supplier's agent 92 = Assigned by buyer or buyer's agent ZZZ = Mutually defined
4276	Payment terms description	C an..35	**O**		
4276	Payment terms description	C an..35	**O**		
C112	TERMS/TIME INFORMATION	C	**O**		
2475	Time reference code	M an..3	**M**		5 = Date of invoice 66 = Specified date 69 = Invoice transmission date 81 = Date of shipment as evidenced by the transport document(s)
2009	Terms time relation code	C an..3	**O**		3 = After reference
2151	Period type code	C an..3	**O**		D = Day M = Month WD = Working days Y = Year
2152	Period count quantity	C n..3	**O**		Number of periods for payment.

Segment Notes:

This segment is used by the issuer of the order to request special payment terms for the current order only.

Example:
PAT+22++5:3:D:20'
This example indicates discount payment terms with payment due 20 days after the reference date which in this case is the invoice date.

5. Segments Layout

Segment number: 23

SG8	- C	10 -	PAT-DTM-PCD-SG9
DTM	- C	5 -	Date/time/period

Function:

To specify date, and/or time, or period.

		EDIFACT	GS1	*	Description
C507	DATE/TIME/PERIOD	M	**M**		
2005	Date or time or period function code qualifier	M an..3	**M**	*	7 = Effective date/time 12 = Terms discount due date/time 13 = Terms net due date 209 = Value date 531 = Payment period
2380	Date or time or period value	C an..35	**R**		
2379	Date or time or period format code	C an..3	**R**		102 = CCYYMMDD

Segment Notes:

This segment is used to specify any dates associated with the payment terms.

Example:
DTM+13:20020331:102'
Net due date for payment is the 31st March 2002.

5. Segments Layout

Segment number: 24

SG8	- C	10 -	PAT-DTM-PCD-SG9
PCD	- C	1 -	Percentage details

Function:

To specify percentage information.

		EDIFACT	GS1	*	Description
C501	PERCENTAGE DETAILS	M	**M**		
5245	Percentage type code qualifier	M an..3	**M**		12 = Discount 15 = Penalty percentage 16 = Interest percentage 68 = Percentage of due amount
5482	Percentage	C n..10	**R**		
5249	Percentage basis identification code	C an..3	**O**		1 = Per unit 13 = Invoice value
1131	Code list identification code	C an..17	**O**		
3055	Code list responsible agency code	C an..3	**D**		
4405	Status description code	C an..3	**N**		

Segment Notes:

This segment is used to specify percentages which will be allowed or charged if an invoice is not paid to terms.

Example:
PCD+15:2.5:13'

5. Segments Layout

Segment number: 25

SG8	- C	10	-	PAT-DTM-PCD-SG9
SG9	- C	9999	-	MOA
MOA	- M	1	-	Monetary amount

Function:

To specify a monetary amount.

		EDIFACT	GS1	*	Description
C516	MONETARY AMOUNT	M	**M**		
5025	Monetary amount type code qualifier	M an..3	**M**		21 = Cash discount 23 = Charge amount 262 = Instalment amount
5004	Monetary amount	C n..35	**R**		Actual value being charged/discounted.
6345	Currency identification code	C an..3	**N**		
6343	Currency type code qualifier	C an..3	**N**		
4405	Status description code	C an..3	**N**		

Segment Notes:

This segment is used to specify monetary values which will be allowed or charged if the invoice is not paid according to the payment terms.

Example:
MOA+21:100'

5. Segments Layout

Segment number: 26

SG10	- C	10 -	TDT-SG11
TDT	- M	1 -	Details of transport

Function:

To specify the transport details such as mode of transport, means of transport, its conveyance reference number and the identification of the means of transport.
The segment may be pointed to by the TPL segment.

		EDIFACT	GS1	*	Description
8051	Transport stage code qualifier	M an..3	**M**		20 = Main-carriage transport
8028	Means of transport journey identifier	C an..17	**O**		Reference Number covering the transport.
C220	MODE OF TRANSPORT	C	**A**		
8067	Transport mode name code	C an..3	**R**		
8066	Transport mode name	C an..17	**N**		
C228	TRANSPORT MEANS	C	**O**		
8179	Transport means description code	C an..8	**D**		23 = Rail bulk car 31 = Truck X3 = Truck up to 3,5 tons (GS1 Temporary Code)
8178	Transport means description	C an..17	**D**		
C040	CARRIER	C	**O**		
3127	Carrier identifier	C an..17	**A**		GLN - Format n13
1131	Code list identification code	C an..17	**O**		
3055	Code list responsible agency code	C an..3	**D**		9 = GS1
3128	Carrier name	C an..35	**O**		
8101	Transit direction indicator code	C an..3	**O**		BS = Buyer to supplier SB = Supplier to buyer
C401	EXCESS TRANSPORTATION INFORMATION	C	**N**		
8457	Excess transportation reason code	M an..3			
8459	Excess transportation responsibility code	M an..3			
7130	Customer shipment authorisation identifier	C an..17			
C222	TRANSPORT IDENTIFICATION	C	**O**		
8213	Transport means identification name identifier	C an..9	**O**		
1131	Code list identification code	C an..17	**O**		
3055	Code list responsible agency code	C an..3	**D**		DE 3055 must be used if DE 8213 is used.
8212	Transport means identification name	C an..35	**R**		Vehicle license plate/Aircraft number.
8453	Transport means nationality code	C an..3	**O**		ISO 3166 two alpha code
	Transport means ownership		**N**		

5. Segments Layout

Segment number: 26

	EDIFACT	GS1	*	Description
8281 indicator code	C an..3			

Segment Notes:

This segment is used to specify transport instructions for the whole Purchase Order, such as requesting an express transport service.

Example:.DescDE Dieses Segment kann für Transportangaben verwendet werden, die für die gesamte Bestellung gültig sind, z. B. die Anforderung von Expresstransport.
TDT+20++30+31'

Dependency Notes:
Data Elements 8179 and 8178 are only used when the type of transport must be specifically identified, that is, a generic description such as road transport is unsuitable.

5. Segments Layout

Segment number: 27

SG10	- C	10 -	TDT-SG11
SG11	- C	10 -	LOC-DTM
LOC	- M	1 -	Place/location identification

Function:

To identify a place or a location and/or related locations.

		EDIFACT	GS1	*	Description
3227	Location function code qualifier	M an..3	**M**		11 = Place/port of discharge 24 = Port of entry
C517	LOCATION IDENTIFICATION	C	**A**		
3225	Location name code	C an..25	**A**		For identification of locations it is recommended to use GLN - Format n13.
1131	Code list identification code	C an..17	**O**		
3055	Code list responsible agency code	C an..3	**D**		9 = GS1 112 = US, U.S. Census Bureau DE 3055 must be used if DE 3225 is used and does not contain an UN/LOCODE.
3224	Location name	C an..256	**O**		
C519	RELATED LOCATION ONE IDENTIFICATION	C	**N**		
3223	First related location name code	C an..25			
1131	Code list identification code	C an..17			
3055	Code list responsible agency code	C an..3			
3222	First related location name	C an..70			
C553	RELATED LOCATION TWO IDENTIFICATION	C	**N**		
3233	Second related location name code	C an..25			
1131	Code list identification code	C an..17			
3055	Code list responsible agency code	C an..3			
3232	Second related location name	C an..70			
5479	Relation code	C an..3	**N**		

Segment Notes:

This segment is used to specify any locations related to the TDT segment .

Example:
LOC+24+5412345678908::9'

5. Segments Layout

Segment number: 28

SG10	- C	10	-	TDT-SG11
SG11	- C	10	-	LOC-DTM
DTM	- C	5	-	Date/time/period

Function:

To specify date, and/or time, or period.

		EDIFACT	GS1	*	Description
C507	DATE/TIME/PERIOD	M	**M**		
2005	Date or time or period function code qualifier	M an..3	**M**	*	189 = Departure date/time, scheduled 232 = Arrival date/time, scheduled
2380	Date or time or period value	C an..35	**R**		
2379	Date or time or period format code	C an..3	**R**		102 = CCYYMMDD 203 = CCYYMMDDHHMM 718 = CCYYMMDD-CCYYMMDD

Segment Notes:

This segment is used to provide dates related to the transport details specified in the TDT segment.

Example:
DTM+189:20020331:102'

5. Segments Layout

Segment number: 29

SG12	- C	5 -	TOD-LOC
TOD	- M	1 -	Terms of delivery or transport

Function:

To specify terms of delivery or transport.

		EDIFACT	GS1	*	Description
4055	Delivery or transport terms function code	C an..3	**R**		3 = Price and despatch condition 5 = Transport condition 6 = Delivery condition 7 = Delivered by supplier 8 = Delivery arranged by logistic service provider
4215	Transport charges payment method code	C an..3	**O**		CC = Collect MX = Mixed PC = Prepaid but charged to customer PO = Prepaid only
C100	TERMS OF DELIVERY OR TRANSPORT	C	**A**		Data elements 1131 and 3055 are only used if specific terms of delivery codes, which are outside those recommended by EDIFACT, are being used.
4053	Delivery or transport terms description code	C an..3	**R**		INCOTERMS (See EANCOM Codes Set) If INCOTERMS are applicable, then DE 3055 has to contain code value "9" and DE 1131 must be used.
1131	Code list identification code	C an..17	**D**		
3055	Code list responsible agency code	C an..3	**D**		
4052	Delivery or transport terms description	C an..70	**O**		
4052	Delivery or transport terms description	C an..70	**O**		

Segment Notes:

This segment is used to specify the terms of delivery for the complete order.

Example:
TOD+3++CIF:2E:9'

5. Segments Layout

Segment number: 30

SG12	- C	5 -	TOD-LOC
LOC	- C	2 -	Place/location identification

Function:

To identify a place or a location and/or related locations.

		EDIFACT	GS1	*	Description
3227	Location function code qualifier	M an..3	**M**		1 = Place of terms of delivery
C517	LOCATION IDENTIFICATION	C	**A**		
3225	Location name code	C an..25	**A**		UN/LOCODE
1131	Code list identification code	C an..17	**O**		
3055	Code list responsible agency code	C an..3	**D**		3 = IATA (International Air Transport Association) DE 3055 must be used if DE 3225 is used and does not contain an UN/LOCODE.
3224	Location name	C an..256	**O**		
C519	RELATED LOCATION ONE IDENTIFICATION	C	**N**		
3223	First related location name code	C an..25			
1131	Code list identification code	C an..17			
3055	Code list responsible agency code	C an..3			
3222	First related location name	C an..70			
C553	RELATED LOCATION TWO IDENTIFICATION	C	**N**		
3233	Second related location name code	C an..25			
1131	Code list identification code	C an..17			
3055	Code list responsible agency code	C an..3			
3232	Second related location name	C an..70			
5479	Relation code	C an..3	**N**		

Segment Notes:

This segment is used if the terms of delivery specified in the TOD segment requires the identification specifically of the place of delivery.

Example:
LOC+1+BE-BRU'

5. Segments Layout

Segment number: 31

SG13	- C	99 -	PAC-SG14
PAC	- M	1 -	Package

Function:

To describe the number and type of packages/physical units.

		EDIFACT	GS1	*	Description
7224	Package quantity	C n..8	**O**		
C531	PACKAGING DETAILS	C	**A**		
7075	Packaging level code	C an..3	**N**		
7233	Packaging related description code	C an..3	**O**		50 = Package barcoded EAN-13 or EAN-8 51 = Package barcoded ITF-14 52 = Package barcoded UCC or EAN-128
7073	Packaging terms and conditions code	C an..3	**O**		1 = Packaging cost paid by supplier 2 = Packaging cost paid by recipient 3 = Packaging cost not charged (returnable)
C202	PACKAGE TYPE	C	**O**		
7065	Package type description code	C an..17	**R**		
1131	Code list identification code	C an..17	**O**		
3055	Code list responsible agency code	C an..3	**D**		9 = GS1 Code 9 in this data element is used only when GS1 codes are used in DE 7065.
7064	Type of packages	C an..35	**O**		
C402	PACKAGE TYPE IDENTIFICATION	C	**N**		
7077	Description format code	M an..3			
7064	Type of packages	M an..35			
7143	Item type identification code	C an..3			
7064	Type of packages	C an..35			
7143	Item type identification code	C an..3			
C532	RETURNABLE PACKAGE DETAILS	C	**D**		Composite C532 is only used where the packaging being described is returnable. This composite identifies who is responsible for payment of its return.
8395	Returnable package freight payment responsibility code	C an..3	**O**		1 = Paid by customer 2 = Free 3 = Paid by supplier
8393	Returnable package load contents code	C an..3	**N**		

Segment Notes:

This segment is used to specify the number and type of packages for the whole message.

Example:
PAC+10++CS'

5. Segments Layout

Segment number: 32

SG13	- C	99 -	PAC-SG14
SG14	- C	5 -	PCI-RFF-DTM-GIN
PCI	- M	1 -	Package identification

Function:

To specify markings and labels on individual packages or physical units.

		EDIFACT	GS1	*	Description
4233	Marking instructions code	C an..3	**R**		16 = Buyer's instructions 39 = Marked with Serial Shipping Container Code (SSCC)
C210	MARKS & LABELS	C	**O**		
7102	Shipping marks description	M an..35	**M**		
7102	Shipping marks description	C an..35	**O**		
7102	Shipping marks description	C an..35	**O**		
7102	Shipping marks description	C an..35	**O**		
7102	Shipping marks description	C an..35	**O**		
7102	Shipping marks description	C an..35	**O**		
7102	Shipping marks description	C an..35	**O**		
7102	Shipping marks description	C an..35	**O**		
7102	Shipping marks description	C an..35	**O**		
7102	Shipping marks description	C an..35	**O**		
8275	Container or package contents indicator code	C an..3	**N**		
C827	TYPE OF MARKING	C	**N**		
7511	Marking type code	M an..3			
1131	Code list identification code	C an..17			
3055	Code list responsible agency code	C an..3			

Segment Notes:

This segment is used to identify markings on the packaging of the product being ordered.

Example:
PCI+39'

5. Segments Layout

Segment number: 33

SG13	- C	99 -	PAC-SG14
SG14	- C	5 -	PCI-RFF-DTM-GIN
RFF	- C	1 -	Reference

Function:

To specify a reference.

		EDIFACT	GS1	*	Description
C506	REFERENCE	M	**M**		
1153	Reference code qualifier	M an..3	**M**		AAT = Master label number PK = Packing list number
1154	Reference identifier	C an..70	**R**		
1156	Document line identifier	C an..6	**N**		
4000	Reference version identifier	C an..35	**N**		
1060	Revision identifier	C an..6	**N**		

Segment Notes:

This segment is used to specify any references which relate to the package identification, e.g. master label number.

Example:
RFF+AAT:9677'

5. Segments Layout

Segment number: 34

SG13	- C	99	-	PAC-SG14
SG14	- C	5	-	PCI-RFF-DTM-GIN
DTM	- C	5	-	Date/time/period

Function:

To specify date, and/or time, or period.

		EDIFACT	GS1	*	Description
C507	DATE/TIME/PERIOD	M	**M**		
2005	Date or time or period function code qualifier	M an..3	**M**	*	171 = Reference date/time
2380	Date or time or period value	C an..35	**R**		
2379	Date or time or period format code	C an..3	**R**		102 = CCYYMMDD

Segment Notes:

This segment is used to specify dates relating to the references given in the preceding RFF segment.

Example:
DTM+171:20011101:102'

5. Segments Layout

Segment number: 35

SG13	- C	99 -	PAC-SG14
SG14	- C	5 -	PCI-RFF-DTM-GIN
GIN	- C	10 -	Goods identity number

Function:

To give specific identification numbers, either as single numbers or ranges.

		EDIFACT	GS1	*	Description
7405	Object identification code qualifier	M an..3	**M**		AW = Serial shipping container code BJ = Serial shipping container code BX = Batch number SRV = GS1 Global Trade Item Number (GS1 Temporary Code)
C208	IDENTITY NUMBER RANGE	M	**M**		
7402	Object identifier	M an..35	**M**		
7402	Object identifier	C an..35	**O**		
C208	IDENTITY NUMBER RANGE	C	**O**		
7402	Object identifier	M an..35	**M**		
7402	Object identifier	C an..35	**O**		
C208	IDENTITY NUMBER RANGE	C	**O**		
7402	Object identifier	M an..35	**M**		
7402	Object identifier	C an..35	**O**		
C208	IDENTITY NUMBER RANGE	C	**O**		
7402	Object identifier	M an..35	**M**		
7402	Object identifier	C an..35	**O**		
C208	IDENTITY NUMBER RANGE	C	**O**		
7402	Object identifier	M an..35	**M**		
7402	Object identifier	C an..35	**O**		

Segment Notes:

This segment is used to provide identification numbers relevant to the packaging unit and level identified in the PAC segment.
In EANCOM it is recommended to use the Serial Shipping Container Code (SSCC) for unique identification of individual transport packages.

Example:
GIN+AW+354123450000000014:354123450000000106'

5. Segments Layout

Segment number: 36

SG15	- C	10 -	EQD
EQD	- M	1 -	Equipment details

Function:

To identify a unit of equipment.

		EDIFACT	GS1	*	Description
8053	Equipment type code qualifier	M an..3	**M**		CN = Container
C237	EQUIPMENT IDENTIFICATION	C	**N**		
8260	Equipment identifier	C an..17			
1131	Code list identification code	C an..17			
3055	Code list responsible agency code	C an..3			
3207	Country name code	C an..3			
C224	EQUIPMENT SIZE AND TYPE	C	**O**		
8155	Equipment size and type description code	C an..10	**O**		
1131	Code list identification code	C an..17	**O**		
3055	Code list responsible agency code	C an..3	**D**		
8154	Equipment size and type description	C an..35	**O**		
8077	Equipment supplier code	C an..3	**N**		
8249	Equipment status code	C an..3	**N**		
8169	Full or empty indicator code	C an..3	**N**		

Segment Notes:

This segment is used to provide information on equipment which will be used in the despatch of the products ordered.

Example:
EQD+CN'

5. Segments Layout

Segment number: 37

SG19	- C	99 -	ALC-ALI-DTM-SG20-SG21-SG22-SG23-SG24
ALC	- M	1 -	Allowance or charge

Function:

To identify allowance or charge details.

		EDIFACT	GS1	*	Description
5463	Allowance or charge code qualifier	M an..3	**M**		A = Allowance C = Charge N = No allowance or charge
C552	ALLOWANCE/CHARGE INFORMATION	C	**O**		
1230	Allowance or charge identifier	C an..35	**D**		If code '69' is used in DE 5189, the agreement number must be specified in DE 1230.
5189	Allowance or charge identification code	C an..3	**O**		1 = Handling commission 32 = Courier fee 69 = Charge for a customer specific finish
4471	Settlement means code	C an..3	**O**		3 = Vendor check/cheque to customer 5 = Charge to be paid by vendor 6 = Charge to be paid by customer
1227	Calculation sequence code	C an..3	**D**		1 = First step of calculation 2 = Second step of calculation etc, etc, etc..... 9 = Ninth step of calculation The calculation sequence indicator is used when multiple allowances and/or charges are applicable. If various allowances and/or charges percentages, quantities, monetary amounts or rates are applicable to the same base price, then the calculation sequence indicator will always equal one. If the various allowances and/or charges are applied against a fluctuating price (constantly because of the application of other allowances and/or charges) then the sequence of calculation is indicated using this data element. If the allowance or charge is not to be applied against a fixed price then the calculation sequence indicator must be included.
C214	SPECIAL SERVICES IDENTIFICATION	C	**D**		This composite is only used if the buyer knows the type of allowance or charge.
7161	Special service description code	C an..3	**R**		DDA = Dealer discount/allowance (GS1 Temporary Code) TD = Trade discount X40 = Allowance/charge regulated by law (GS1 Temporary Code)
1131	Code list identification code	C an..17	**O**		
3055	Code list responsible agency code	C an..3	**D**	*	9 = GS1 This data element is only used if an GS1 code is used in data element 7161.
7160	Special service description	C an..35	**O**		
7160	Special service description	C an..35	**O**		

Segment Notes:

This segment is used to specify any allowances or charges related to the complete order. If allowances and

5. Segments Layout

Segment number: 37

charges are applicable for a specific line item then they must be indicated using segment group 43.
As the calculation price type (data element 5125 PRI segment) used in the purchase order is always a net price, allowances and/or charges specified in the ALC segment are for information purposes only.

Example:
ALC+A+++1'

5. Segments Layout

Segment number: 38

SG19	- C	99 -	ALC-ALI-DTM-SG20-SG21-SG22-SG23-SG24
ALI	- C	5 -	Additional information

Function:

To indicate that special conditions due to the origin, customs preference, fiscal or commercial factors are applicable.

		EDIFACT	GS1	*	Description
3239	Country of origin name code	C an..3	**O**		Use ISO 3166 two alpha
9213	Duty regime type code	C an..3	**O**		1 = Origin subject to EC/EFTA preference 2 = Origin subject to other preference agreement
4183	Special condition code	C an..3	**O**		8 = Subject to discount 76E = Special conditions applicable to only this invoice (GS1 Temporary Code)
4183	Special condition code	C an..3	**O**		
4183	Special condition code	C an..3	**O**		
4183	Special condition code	C an..3	**O**		
4183	Special condition code	C an..3	**O**		

Segment Notes:

This segment is used to indicate any special conditions related to the allowances and/or charges specified in the ALC segment.

Example:
ALI+++8'

5. Segments Layout

Segment number: 39

SG19	- C	99 -	ALC-ALI-DTM-SG20-SG21-SG22-SG23-SG24
DTM	- C	5 -	Date/time/period

Function:

To specify date, and/or time, or period.

		EDIFACT	GS1	*	Description
C507	DATE/TIME/PERIOD	M	**M**		
2005	Date or time or period function code qualifier	M an..3	**M**	*	194 = Start date/time 206 = End date/time
2380	Date or time or period value	C an..35	**R**		
2379	Date or time or period format code	C an..3	**R**		102 = CCYYMMDD 203 = CCYYMMDDHHMM

Segment Notes:

This segment is used to indicate any dates related to the allowances or/charges information specified in the ALC segment.

Example:
DTM+194:20021101:102'
DTM+206:20021115:102'
This example indicates that the allowances and/or charges are start on the 1st of November 2002 and finish on the 15th of November 2002.

5. Segments Layout

Segment number: 40

SG19	- C	99 -	ALC-ALI-DTM-SG20-SG21-SG22-SG23-SG24
SG20	- C	1 -	QTY-RNG
QTY	- M	1 -	Quantity

Function:

To specify a pertinent quantity.

		EDIFACT	GS1	*	Description
C186	QUANTITY DETAILS	M	**M**		
6063	Quantity type code qualifier	M an..3	**M**	*	1 = Discrete quantity
6060	Quantity	M an..35	**M**		
6411	Measurement unit code	C an..3	**D**		This data element is only used if the current product is of variable quantity.

Segment Notes:

This segment is used to specify quantity allowance/charge information.
As an order normally will include many different products it is not expected that the QTY allowance or charge segment will be used.

Example:
QTY+1:14'

5. Segments Layout

Segment number: 41

SG19	- C	99 -	ALC-ALI-DTM-SG20-SG21-SG22-SG23-SG24
SG20	- C	1 -	QTY-RNG
RNG	- C	1 -	Range details

Function:

To identify a range.

		EDIFACT	GS1	*	Description
6167	Range type code qualifier	M an..3	**M**		1 = Allowance range 2 = Charge range
C280	RANGE	C	**R**		
6411	Measurement unit code	M an..3	**M**		
6162	Range minimum value	C n..18	**O**		
6152	Range maximum value	C n..18	**O**		

Segment Notes:

This segment is used to specify ranges which apply to the previous QTY segment.

Example:
RNG+1+KGM:15'

5. Segments Layout

Segment number: 42

SG19	- C	99 -	ALC-ALI-DTM-SG20-SG21-SG22-SG23-SG24
SG21	- C	1 -	PCD-RNG
PCD	- M	1 -	Percentage details

Function:

To specify percentage information.

		EDIFACT	GS1	*	Description
C501	PERCENTAGE DETAILS	M	**M**		
5245	Percentage type code qualifier	M an..3	**M**		3 = Allowance or charge
5482	Percentage	C n..10	**R**		
5249	Percentage basis identification code	C an..3	**O**		
1131	Code list identification code	C an..17	**O**		
3055	Code list responsible agency code	C an..3	**D**		
4405	Status description code	C an..3	**N**		

Segment Notes:

This segment is used to specify percentage allowance/charge information.

Example:
PCD+3:1.25'

5. Segments Layout

Segment number: 43

SG19	- C	99 -	ALC-ALI-DTM-SG20-SG21-SG22-SG23-SG24
SG21	- C	1 -	PCD-RNG
RNG	- C	1 -	Range details

Function:

To identify a range.

		EDIFACT	GS1	*	Description
6167	Range type code qualifier	M an..3	**M**		1 = Allowance range 2 = Charge range
C280	RANGE	C	**R**		
6411	Measurement unit code	M an..3	**M**		
6162	Range minimum value	C n..18	**O**		
6152	Range maximum value	C n..18	**O**		

Segment Notes:

This segment is used to specify ranges which apply to the previous PCD segment.

Example:
RNG+1+KGM:250:600'

5. Segments Layout

Segment number: 44

SG19	- C	99 -	ALC-ALI-DTM-SG20-SG21-SG22-SG23-SG24
SG22	- C	2 -	MOA-RNG
MOA	- M	1 -	Monetary amount

Function:

To specify a monetary amount.

		EDIFACT	GS1	*	Description
C516	MONETARY AMOUNT	M	**M**		
5025	Monetary amount type code qualifier	M an..3	**M**		23 = Charge amount 178 = Exact amount 204 = Allowance amount
5004	Monetary amount	C n..35	**R**		
6345	Currency identification code	C an..3	**O**		Use ISO 4217 three alpha
6343	Currency type code qualifier	C an..3	**O**		
4405	Status description code	C an..3	**O**		

Segment Notes:

This segment is used to specify monetary amount allowance/charge information.

Example:
MOA+23:500'

5. Segments Layout

Segment number: 45

SG19	- C	99 -	ALC-ALI-DTM-SG20-SG21-SG22-SG23-SG24
SG22	- C	2 -	MOA-RNG
RNG	- C	1 -	Range details

Function:
To identify a range.

		EDIFACT	GS1	*	Description
6167	Range type code qualifier	M an..3	**M**		3 = Monetary range
C280	RANGE	C	**R**		
6411	Measurement unit code	M an..3	**M**		
6162	Range minimum value	C n..18	**O**		
6152	Range maximum value	C n..18	**O**		

Segment Notes:
This segment is used to specify ranges which apply to the previous MOA segment.

Example:
RNG+3+KGM:800:1200'

5. Segments Layout

Segment number: 46

SG19	- C	99 -	ALC-ALI-DTM-SG20-SG21-SG22-SG23-SG24
SG23	- C	1 -	RTE-RNG
RTE	- M	1 -	Rate details

Function:

To specify rate information.

		EDIFACT	GS1	*	Description
C128	RATE DETAILS	M	**M**		
5419	Rate type code qualifier	M an..3	**M**		1 = Allowance rate 2 = Charge rate
5420	Unit price basis rate	M n..15	**M**		
5284	Unit price basis value	C n..9	**A**		
6411	Measurement unit code	C an..3	**O**		
4405	Status description code	C an..3	**N**		

Segment Notes:

This segment is used to specify rate allowance/charge information.

Example:
RTE+2:5.5'

5. Segments Layout

Segment number: 47

SG19	- C	99 -	ALC-ALI-DTM-SG20-SG21-SG22-SG23-SG24
SG23	- C	1 -	RTE-RNG
RNG	- C	1 -	Range details

Function:

To identify a range.

		EDIFACT	GS1	*	Description
6167	Range type code qualifier	M an..3	**M**		1 = Allowance range 2 = Charge range
C280	RANGE	C	**R**		
6411	Measurement unit code	M an..3	**M**		
6162	Range minimum value	C n..18	**O**		
6152	Range maximum value	C n..18	**O**		

Segment Notes:

This segment is used to specify ranges which apply to the previous RTE segment.

Example:
RNG+2+KGM:20:100'

5. Segments Layout

Segment number: 48

SG19	- C	99 -	ALC-ALI-DTM-SG20-SG21-SG22-SG23-SG24
SG24	- C	5 -	TAX-MOA
TAX	- M	1 -	Duty/tax/fee details

Function:

To specify relevant duty/tax/fee information.

		EDIFACT	GS1	*	Description
5283	Duty or tax or fee function code qualifier	M an..3	**M**		5 = Customs duty 7 = Tax
C241	DUTY/TAX/FEE TYPE	C	**D**		
5153	Duty or tax or fee type name code	C an..3	**O**		GST = Goods and services tax VAT = Value added tax
1131	Code list identification code	C an..17	**O**		
3055	Code list responsible agency code	C an..3	**D**		
5152	Duty or tax or fee type name	C an..35	**O**		
C533	DUTY/TAX/FEE ACCOUNT DETAIL	C	**O**		
5289	Duty or tax or fee account code	M an..6	**M**		
1131	Code list identification code	C an..17	**O**		
3055	Code list responsible agency code	C an..3	**D**		
5286	Duty or tax or fee assessment basis value	C an..15	**O**		
C243	DUTY/TAX/FEE DETAIL	C	**A**		
5279	Duty or tax or fee rate code	C an..7	**O**		
1131	Code list identification code	C an..17	**O**		
3055	Code list responsible agency code	C an..3	**D**		
5278	Duty or tax or fee rate	C an..17	**O**		
5273	Duty or tax or fee rate basis code	C an..12	**O**		
1131	Code list identification code	C an..17	**O**		
3055	Code list responsible agency code	C an..3	**D**		
5305	Duty or tax or fee category code	C an..3	**D**		A = Mixed tax rate E = Exempt from tax S = Standard rate
3446	Party tax identifier	C an..20	**N**		
1227	Calculation sequence code	C an..3	**N**		

Segment Notes:

This segment is used to specify tax information related to the allowance or charge for the full message.

Example:
TAX+7+VAT+++:::17.5+S'

5. Segments Layout

Segment number: 48

Dependency Notes:
DE C241 and 5305: Tax types and categories will differ from country to country. They are to be defined by national guidelines.

5. Segments Layout

Segment number: 49

SG19	- C	99 -	ALC-ALI-DTM-SG20-SG21-SG22-SG23-SG24
SG24	- C	5 -	TAX-MOA
MOA	- C	1 -	Monetary amount

Function:

To specify a monetary amount.

		EDIFACT	GS1	*	Description
C516	MONETARY AMOUNT	M	**M**		
5025	Monetary amount type code qualifier	M an..3	**M**		124 = Tax amount 125 = Taxable amount
5004	Monetary amount	C n..35	**R**		
6345	Currency identification code	C an..3	**N**		
6343	Currency type code qualifier	C an..3	**N**		
4405	Status description code	C an..3	**N**		

Segment Notes:

This segment is used to specify monetary amounts related to the tax segment.

Example:
MOA+124:48.90'

5. Segments Layout

Segment number: 50

SG28	- C	200000 -	LIN-PIA-IMD-MEA-QTY-ALI-DTM-MOA-GIN-QVR-FTX-SG32-SG33-SG34-SG37-SG38-SG39-SG43-SG49
LIN	- M	1 -	Line item

Function:

To identify a line item and configuration.

		EDIFACT	GS1	*	Description
1082	Line item identifier	C an..6	**R**		Application generated number of the count of the order lines.
1229	Action request/notification description code	C an..3	**N**		
C212	ITEM NUMBER IDENTIFICATION	C	**D**		This composite will only be used for the identification of GS1 codes. If another coding structure is required, e.g. HIBC, then this composite will not be used and the code will be detailed in the PIA segment.
7140	Item identifier	C an..35	**R**		Format n..14 GTIN - this is the number of the article being ordered.
7143	Item type identification code	C an..3	**R**	*	SRV = GS1 Global Trade Item Number
1131	Code list identification code	C an..17	**N**		
3055	Code list responsible agency code	C an..3	**N**		
C829	SUB-LINE INFORMATION	C	**D**		This composite is only used when sub-lines are required.
5495	Sub-line indicator code	C an..3	**R**	*	1 = Sub-line information
1082	Line item identifier	C an..6	**R**		
1222	Configuration level number	C n..2	**N**		
7083	Configuration operation code	C an..3	**N**		

Segment Notes:

This segment is used to identify the item being ordered.
If Global Trade Item Numbers are available it is mandatory to use GTIN within the LIN segment.
The detail section of the Purchase Order is formed by a repeating group of segments, always starting with the LIN segment.

Note on DE 1082:
Numbering rule: In Part I, section 4.10 there is the recommendation “Within EANCOM® it is recommended that the line numbers used in the first occurrence of data element 1082 in the LIN segment be sequential, starting at 1 for each new message.”

Note on DE 7140:
Only the following significant digits are possible:
- 8 digits for GTIN 8 codes
- 12 digits for GTIN 12 codes
- 13 digits for GTIN 13 codes
- 14 digits for GTIN 14 codes

Dependency Note:
C829 is only used when sub-lines are required.
FOR A COMPLETE DESCRIPTION ON THE USAGE OF SUB-LINES PLEASE REFER TO PART I, SECTION 4.10.

Example:
LIN+1++5412345111115:SRV'

5. Segments Layout

Segment number: 51

SG28	- C	200000 -	LIN-PIA-IMD-MEA-QTY-ALI-DTM-MOA-GIN-QVR-FTX-SG32-SG33-SG34-SG37-SG38-SG39-SG43-SG49
PIA	- C	25 -	Additional product id

Function:

To specify additional or substitutional item identification codes.

		EDIFACT	GS1	*	Description
4347	Product identifier code qualifier	M an..3	**M**	*	1 = Additional identification 2 = Identification for potential substitution 4 = Substituted for 5 = Product identification X1 = No substitution accepted (GS1 Temporary Code) Product Id function coded has the following restricted coded functions: 1 - Additional Identification - To provide an additional identity for the product identified in the LIN segment. The additional identification can consist of : A supplemental identification which provides more information complementary to the main trade item number provided in the LIN segment, e.g., a batch number, promotional variant number, product group number, etc. An alternative identification which may be used where no main trade item number has been provided in the LIN segment, e.g., a buyers article number, an HIBC code, etc. 2 - Identification for substitution - To provide the trade item number of a product which can substitute the product identified by the trade item number provided in the LIN segment when the latter is temporarily unavailable, e.g., a similar or identical product coded with a different GTIN (article coded in a different country), a different size unit of the same product, a similar product with for example a different brand name. 4 - Substituted for - The given item number is the number of the original product substituted for another identified in the LIN segment. 5 - Product Identification - To provide the primary product identification code when no GTIN has been provided in the LIN segment. GTIN should not be used in conjunction with this code value. It should be noted that when this code is used the product code specified here is the code which should be used for invoicing purposes. X1 - No substitution accepted - The buyer will not accept any other product code than the one specified in the LIN segment. The code specified in the LIN segment is repeated in the PIA segment to confirm the only code acceptable.
C212	ITEM NUMBER IDENTIFICATION	M	**M**		
7140	Item identifier	C an..35	**R**		
7143	Item type identification code	C an..3	**R**		AC = HIBC (Health Industry Bar Code) EWC = European Waste Catalogue (GS1 Temporary Code)

5. Segments Layout

Segment number: 51

		EDIFACT	GS1	*	Description
					DW = Drawing IB = ISBN (International Standard Book Number) IN = Buyer's item number SA = Supplier's article number SRV = GS1 Global Trade Item Number UA = Ultimate customer's article number
1131	Code list identification code	C an..17	**O**		
3055	Code list responsible agency code	C an..3	**D**		9 = GS1 91 = Assigned by supplier or supplier's agent 92 = Assigned by buyer or buyer's agent
C212	ITEM NUMBER IDENTIFICATION	C	**O**		
7140	Item identifier	C an..35	**R**		
7143	Item type identification code	C an..3	**R**		
1131	Code list identification code	C an..17	**O**		
3055	Code list responsible agency code	C an..3	**D**		
C212	ITEM NUMBER IDENTIFICATION	C	**O**		
7140	Item identifier	C an..35	**R**		
7143	Item type identification code	C an..3	**R**		
1131	Code list identification code	C an..17	**O**		
3055	Code list responsible agency code	C an..3	**D**		
C212	ITEM NUMBER IDENTIFICATION	C	**O**		
7140	Item identifier	C an..35	**R**		
7143	Item type identification code	C an..3	**R**		
1131	Code list identification code	C an..17	**O**		
3055	Code list responsible agency code	C an..3	**D**		
C212	ITEM NUMBER IDENTIFICATION	C	**O**		
7140	Item identifier	C an..35	**R**		
7143	Item type identification code	C an..3	**R**		
1131	Code list identification code	C an..17	**O**		
3055	Code list responsible agency code	C an..3	**D**		

Segment Notes:

This segment is used to specify additional or substitutional item identification codes such as a buyer's, or seller's item number.

Examples:
PIA+1+ABC1234:IN'
In this example the PIA segment is used to provide an additional identification to the trade item number provided in the LIN segment. The GTIN 5412345111115 provided in the LIN segment refers to the internal buyer's item

5. Segments Layout

Segment number: 51

number ABC1234.

PIA+2+4000862141664:SRV'
In this example the PIA segment is used to provide an GTIN identification for substitution. The product identified in the LIN segment by the GTIN 5412345111115 can be substituted by the product identified in the PIA segment by the GTIN 4000862141664 in case the former is not available.

PIA+4+5410738251028:SRV'
In this example the 'Substituted For' PIA segment is used to provide the number of the product which is being substituted for the former primary GTIN. The new code 5412345111184 would be included in the message in the LIN segment.

PIA+5+2209953C001L:AC'
This example details the HIBC code 2209953C001L which is provided as the primary product code because no GTIN was provided in the LIN segment.

PIA+X1+5412345111115:SRV'
This example details the situation where the buyer explicitly specifies that no other product is acceptable but the one specified in the LIN segment. The PIA re-specifies the product code from the LIN segment.

5. Segments Layout

Segment number: 52

SG28	- C	200000 -	LIN-PIA-IMD-MEA-QTY-ALI-DTM-MOA-GIN-QVR-FTX-SG32-SG33-SG34-SG37-SG38-SG39-SG43-SG49
IMD	- C	99 -	Item description

Function:

To describe an item in either an industry or free format.

		EDIFACT	GS1	*	Description
7077	Description format code	C an..3	**O**	*	A = Free-form long description B = Code and text C = Code (from industry code list) E = Free-form short description F = Free-form S = Structured (from industry code list)
C272	ITEM CHARACTERISTIC	C	**O**		
7081	Item characteristic code	C an..3	**R**		13 = Quality 35 = Colour 98 = Size RLI = Rolling instructions (GS1 Temporary Code) UQ5 = Inspection agencies (GS1 Temporary Code)
1131	Code list identification code	C an..17	**O**		
3055	Code list responsible agency code	C an..3	**D**	*	9 = GS1 Must be used if DE7081 contains an GS1 Code.
C273	ITEM DESCRIPTION	C	**A**		
7009	Item description code	C an..17	**O**		CU = Consumer unit (GS1 Permanent Code) DU = Despatch unit (GS1 Permanent Code) TU = Traded unit (GS1 Permanent Code) VQ = Variable quantity product (GS1 Permanent Code)
1131	Code list identification code	C an..17	**O**		
3055	Code list responsible agency code	C an..3	**D**		9 = GS1 83 = US, National Retail Federation
7008	Item description	C an..256	**O**		
7008	Item description	C an..256	**O**		
3453	Language name code	C an..3	**O**		
7383	Surface or layer code	C an..3	**N**		

Segment Notes:

This segment is used to describe the current line item.
It is recommended that this segment only be used for coded descriptions. Data element 7008 in clear text should only be used when no product code is available or when free-form descriptions are required by trading partners.
If you wish to indicate that promotional details are marked on the package, then this should be indicated in DE 7233 in the PAC segment.

Example:
IMD+C++TU::9'
IMD+F++:::CORN CRISPIES:CASE'

5. Segments Layout

Segment number: 53

SG28	- C	200000 -	LIN-PIA-IMD-MEA-QTY-ALI-DTM-MOA-GIN-QVR-FTX-SG32-SG33-SG34-SG37-SG38-SG39-SG43-SG49
MEA	- C	99 -	Measurements

Function:

To specify physical measurements, including dimension tolerances, weights and counts.

		EDIFACT	GS1	*	Description
6311	Measurement purpose code qualifier	M an..3	**M**		PD = Physical dimensions (product ordered)
C502	MEASUREMENT DETAILS	C	**A**		
6313	Measured attribute code	C an..3	**A**		DI = Diameter DP = Depth ID = Inside diameter HT = Height dimension LN = Length dimension OD = Outside diameter TH = Thickness
6321	Measurement significance code	C an..3	**O**		3 = Approximately 4 = Equal to
6155	Non-discrete measurement name code	C an..17	**O**		
6154	Non-discrete measurement name	C an..70	**N**		
C174	VALUE/RANGE	C	**R**		
6411	Measurement unit code	M an..3	**M**		
6314	Measurement value	C an..18	**O**		
6162	Range minimum value	C n..18	**O**		
6152	Range maximum value	C n..18	**O**		
6432	Significant digits quantity	C n..2	**O**		
7383	Surface or layer code	C an..3	**N**		

Segment Notes:

This segment is used to specify the actual physical dimensions of the product being ordered where that product is sold in variable lengths or volumes.
This segment must be used in conjunction with the LIN segment for the precise identification of the ordered product.

Example:
MEA+PD+LN:4+MTR:4.5'
The precise length of the product identified by the GTIN 5412345111115 is 4.5 metres.

5. Segments Layout

Segment number: 54

SG28	- C	200000 -	LIN-PIA-IMD-MEA-QTY-ALI-DTM-MOA-GIN-QVR-FTX-SG32-SG33-SG34-SG37-SG38-SG39-SG43-SG49
QTY	- C	99 -	Quantity

Function:

To specify a pertinent quantity.

		EDIFACT	GS1	*	Description
C186	QUANTITY DETAILS	M	**M**		
6063	Quantity type code qualifier	M an..3	**M**	*	1 = Discrete quantity 21 = Ordered quantity 59 = Number of consumer units in the traded unit 52 = Quantity per pack 164 = Delivery batch 192 = Free goods quantity 246 = Returns replacement quantity 17E = Number of units in lower packaging or configuration level (GS1 Temporary Code) 45E = Number of units in higher packaging or configuration level (GS1 Temporary Code)
6060	Quantity	M an..35	**M**		
6411	Measurement unit code	C an..3	**D**		PF = pallet (lift) This DE is only used if the product ordered is a variable quantity product.

Segment Notes:

This segment is used to specify the total quantity ordered for the current line identified in the LIN segment.
If split deliveries are being used, the quantities for the split delivery are specified in segment group 37. The totals for all quantities expressed in the QTY's at segment group level must equal the value in this QTY segment.
DE 6063: Code value '59' is only to be used in the orders message for confirmation purposes and not to change any information previously agreed and contained in a price or product catalogue.

Example:
QTY+21:48:KGM'

5. Segments Layout

Segment number: 55

SG28	- C	200000 -	LIN-PIA-IMD-MEA-QTY-ALI-DTM-MOA-GIN-QVR-FTX-SG32-SG33-SG34-SG37-SG38-SG39-SG43-SG49
ALI	- C	5 -	Additional information

Function:

To indicate that special conditions due to the origin, customs preference, fiscal or commercial factors are applicable.

		EDIFACT	GS1	*	Description
3239	Country of origin name code	C an..3	**O**		
9213	Duty regime type code	C an..3	**O**		
4183	Special condition code	C an..3	**O**		151 = Items from the same dye lot
4183	Special condition code	C an..3	**O**		
4183	Special condition code	C an..3	**O**		
4183	Special condition code	C an..3	**O**		
4183	Special condition code	C an..3	**O**		

Segment Notes:

This segment is used to specify any additional information related to the current line item.

Example:
ALI+++151'

5. Segments Layout

Segment number: 56

SG28	- C	200000 -	LIN-PIA-IMD-MEA-QTY-ALI-DTM-MOA-GIN-QVR-FTX-SG32-SG33-SG34-SG37-SG38-SG39-SG43-SG49
DTM	- C	35 -	Date/time/period

Function:

To specify date, and/or time, or period.

		EDIFACT	GS1	*	Description
C507	DATE/TIME/PERIOD	M	**M**		
2005	Date or time or period function code qualifier	M an..3	**M**	*	2 = Delivery date/time, requested 10 = Shipment date/time, requested 11 = Despatch date and/or time 15 = Promotion start date/time 61 = Cancel if not delivered by this date 63 = Delivery date/time, latest 64 = Delivery date/time, earliest 69 = Delivery date/time, promised for 100 = Product ageing period before delivery 200 = Pick-up/collection date/time of cargo 361 = Best before date 364 = Minimum shelf life remaining at time of despatch period 754 = Product ageing duration, maximum X14 = Requested for delivery week commencing (GS1 Temporary Code)
2380	Date or time or period value	C an..35	**R**		
2379	Date or time or period format code	C an..3	**R**		102 = CCYYMMDD 203 = CCYYMMDDHHMM 718 = CCYYMMDD-CCYYMMDD

Segment Notes:

This segment is primarily used to specify the dates (and possibly times) associated with the delivery or collection of the currently identified product. Also other relevant dates may be specified.

Example:.DescDE Dieses Segment wird für Datumsangaben (und ggf. Zeitangaben), die mit der Lieferung oder Abholung des aktuell identifizierten Produkts einhergehen, benutzt. Außerdem dürfen weitere relevante Daten spezifiziert werden.
DTM+2:20020910:102'

5. Segments Layout

Segment number: 57

SG28	- C	200000 -	LIN-PIA-IMD-MEA-QTY-ALI-DTM-MOA-GIN-QVR-FTX-SG32-SG33-SG34-SG37-SG38-SG39-SG43-SG49
MOA	- C	10 -	Monetary amount

Function:

To specify a monetary amount.

		EDIFACT	GS1	*	Description
C516	MONETARY AMOUNT	M	**M**		
5025	Monetary amount type code qualifier	M an..3	**M**		40 = Customs value 203 = Line item amount 388 = Total amount including Value Added Tax (VAT)
5004	Monetary amount	C n..35	**R**		
6345	Currency identification code	C an..3	**N**		
6343	Currency type code qualifier	C an..3	**N**		
4405	Status description code	C an..3	**N**		

Segment Notes:

This segment is used for two purposes, firstly, when allowances/charges are involved, to indicate net amounts for the line, and secondly, to provide valuation amounts, e.g., customs value.

Example:
MOA+203:1253.42'

5. Segments Layout

Segment number: 58

SG28	- C	200000	-	LIN-PIA-IMD-MEA-QTY-ALI-DTM-MOA-GIN-QVR-FTX-SG32-SG33-SG34-SG37-SG38-SG39-SG43-SG49
GIN	- C	1000	-	Goods identity number

Function:

To give specific identification numbers, either as single numbers or ranges.

		EDIFACT	GS1	*	Description
7405	Object identification code qualifier	M an..3	**M**		CPE = Coupon number (GS1 Temporary Code) CQE = Cheque number (GS1 Temporary Code)
C208	IDENTITY NUMBER RANGE	M	**M**		
7402	Object identifier	M an..35	**M**		
7402	Object identifier	C an..35	**O**		
C208	IDENTITY NUMBER RANGE	C	**O**		
7402	Object identifier	M an..35	**M**		
7402	Object identifier	C an..35	**O**		
C208	IDENTITY NUMBER RANGE	C	**O**		
7402	Object identifier	M an..35	**M**		
7402	Object identifier	C an..35	**O**		
C208	IDENTITY NUMBER RANGE	C	**O**		
7402	Object identifier	M an..35	**M**		
7402	Object identifier	C an..35	**O**		
C208	IDENTITY NUMBER RANGE	C	**O**		
7402	Object identifier	M an..35	**M**		
7402	Object identifier	C an..35	**O**		

Segment Notes:

This segment is used to indicate printed numbers or the range of numbers to be printed on coupons or gift cheques.

Example:
GIN+CPE+AS-1299:AS-1350'

5. Segments Layout

Segment number: 59

SG28	- C	200000 -	LIN-PIA-IMD-MEA-QTY-ALI-DTM-MOA-GIN-QVR-FTX-SG32-SG33-SG34-SG37-SG38-SG39-SG43-SG49
QVR	- C	1 -	Quantity variances

Function:

To specify item details relating to quantity variances.

		EDIFACT	GS1	*	Description
C279	QUANTITY DIFFERENCE INFORMATION	C	**A**		
6064	Quantity variance value	M n..15	**M**		Specify the actual variance amount here.
6063	Quantity type code qualifier	C an..3	**R**		21 = Ordered quantity
4221	Discrepancy nature identification code	C an..3	**O**		
C960	REASON FOR CHANGE	C	**O**		
4295	Change reason description code	C an..3	**O**		
1131	Code list identification code	C an..17	**O**		
3055	Code list responsible agency code	C an..3	**D**		
4294	Change reason description	C an..35	**O**		

Segment Notes:

This segment is used to specify quantity variances.

Example:
QVR+-20:21'

Note:
This segment will normally not be used in a Purchase Order.

5. Segments Layout

Segment number: 60

SG28	- C	200000 -	LIN-PIA-IMD-MEA-QTY-ALI-DTM-MOA-GIN-QVR-FTX-SG32-SG33-SG34-SG37-SG38-SG39-SG43-SG49
FTX	- C	99 -	Free text

Function:

To provide free form or coded text information.

		EDIFACT	GS1	*	Description
4451	Text subject code qualifier	M an..3	**M**		PKG = Packaging information PUR = Purchasing information QQD = Quality demands/requirements ZZZ = Mutually defined
4453	Free text function code	C an..3	**O**	*	1 = Text for subsequent use
C107	TEXT REFERENCE	C	**D**		References to standard text. This composite is only used when trading partners have agreed to use mutually defined code values.
4441	Free text value code	M an..17	**M**		001 = ...standard text...
1131	Code list identification code	C an..17	**O**		
3055	Code list responsible agency code	C an..3	**D**		91 = Assigned by supplier or supplier's agent 92 = Assigned by buyer or buyer's agent
C108	TEXT LITERAL	C	**D**		This composite is only used if coded text can not be used.
4440	Free text value	M an..512	**M**		
4440	Free text value	C an..512	**O**		
4440	Free text value	C an..512	**O**		
4440	Free text value	C an..512	**O**		
4440	Free text value	C an..512	**O**		
3453	Language name code	C an..3	**D**		ISO 639 two alpha code This data element is only used when non coded free text has been provided in data element C108.
4447	Free text format code	C an..3	**N**		

Segment Notes:

This segment is used to specify any special requirements for the current line item.
Use of this segment in free form is not recommended since it may inhibit automatic processing of the Order.
Coded references to standard texts is an available functionality which enables automatic processing and reduces transmission and processing overheads. Standard texts should be mutually defined among trading partners and can be used to cover legal and other requirements.

Example:
FTX+ZZZ+1+001::92'

5. Segments Layout

Segment number: 61

SG28	- C	200000	-	LIN-PIA-IMD-MEA-QTY-ALI-DTM-MOA-GIN-QVR-FTX-SG32-SG33-SG34-SG37-SG38-SG39-SG43-SG49
SG32	- C	25	-	PRI-CUX-DTM
PRI	- M	1	-	Price details

Function:

To specify price information.

		EDIFACT	GS1	*	Description
C509	PRICE INFORMATION	C	**R**		
5125	Price code qualifier	M an..3	**M**		AAA = Calculation net AAE = Information price, excluding allowances or charges, including taxes AAF = Information price, excluding allowances or charges and taxes AAA - The price stated is the net price including all allowances and charges and excluding taxes. Allowances and charges may be stated for information purposes only. AAH = Subject to escalation and price adjustment AAQ = Firm price ABL = Base price ABM = Base price difference Use the codes AAH, AAQ, ABL, ABM when dealing with CSA (customer specific articles).
5118	Price amount	C n..15	**R**		
5375	Price type code	C an..3	**O**		CA = Catalogue CT = Contract
5387	Price specification code	C an..3	**O**		AAE = Not subject to fluctuation ALT = Alternate price DPR = Discount price EUP = Expected unit price LBL = Labelling price PRP = Promotional price RTP = Retail price SRP = Suggested retail price
5284	Unit price basis value	C n..9	**D**		
6411	Measurement unit code	C an..3	**D**		
5213	Sub-line item price change operation code	C an..3	**N**		

Segment Notes:

This segment is used to detail the price for the current product identified in the LIN segment.
The calculation price detailed in the Purchase Order will always be the Net Unit Price, i.e., Gross Price + Charges - Allowances.

Example:
PRI+AAA:14.58:CT:AAE'

Dependency Notes:
Data elements 5284 and 6411 are used when a product is a variable quantity product, e.g. price per 200 kilos, or when the unit of measure for purchasing, delivery, and invoicing are different for a product, e.g. sugar is not a variable quantity product but ordered and delivered in packs, and invoiced in kilos or tonnes.

5. Segments Layout

Segment number: 62

SG28	- C	200000 -	LIN-PIA-IMD-MEA-QTY-ALI-DTM-MOA-GIN-QVR-FTX-SG32-SG33-SG34-SG37-SG38-SG39-SG43-SG49
SG32	- C	25 -	PRI-CUX-DTM
CUX	- C	1 -	Currencies

Function:

To specify currencies used in the transaction and relevant details for the rate of exchange.

		EDIFACT	GS1	*	Description
C504	CURRENCY DETAILS	C	**R**		
6347	Currency usage code qualifier	M an..3	**M**	*	2 = Reference currency
6345	Currency identification code	C an..3	**R**		ISO 4217 three alpha
6343	Currency type code qualifier	C an..3	**R**	*	4 = Invoicing currency 9 = Order currency 10 = Pricing currency 12 = Quotation currency
6348	Currency rate value	C n..4	**N**		
C504	CURRENCY DETAILS	C	**D**		The second occurrence of this composite is only used if a target currency is being specified.
6347	Currency usage code qualifier	M an..3	**M**	*	3 = Target currency
6345	Currency identification code	C an..3	**R**		ISO 4217 three alpha
6343	Currency type code qualifier	C an..3	**R**	*	4 = Invoicing currency 9 = Order currency 10 = Pricing currency 12 = Quotation currency
6348	Currency rate value	C n..4	**O**		
5402	Currency exchange rate	C n..12	**D**		The rate of exchange is only used if a target currency has been identified in the second occurrence of C504.
6341	Exchange rate currency market identifier	C an..3	**N**		

Segment Notes:

This segment is used to specify currency data related to the previous PRI segment.
When specifying Reference and Target Currencies for international trade, one occurrence of CUX is all that is required. The reference currency is identified in the first occurrence of composite C504, with the target currency specified in the second occurrence of C504. The rate of exchange between the two is detailed in DE 5402.
The general rule for calculating the rate of exchange is as follows:
Reference Currency multiplied by Rate = Target Currency.

Example:
CUX+2:EUR:9'
CUX+2:EUR:9+3:USD:4+0.90243'

5. Segments Layout

Segment number: 63

SG28	- C	200000	-	LIN-PIA-IMD-MEA-QTY-ALI-DTM-MOA-GIN-QVR-FTX-SG32-SG33-SG34-SG37-SG38-SG39-SG43-SG49
SG32	- C	25	-	PRI-CUX-DTM
DTM	- C	5	-	Date/time/period

Function:

To specify date, and/or time, or period.

		EDIFACT	GS1	*	Description
C507	DATE/TIME/PERIOD	M	**M**		
2005	Date or time or period function code qualifier	M an..3	**M**		799 = Validity end date
2380	Date or time or period value	C an..35	**R**		
2379	Date or time or period format code	C an..3	**R**		102 = CCYYMMDD 203 = CCYYMMDDHHMM 718 = CCYYMMDD-CCYYMMDD

Segment Notes:

This segment is used to specify the dates (and possibly times) associated with the price of the currently identified product.

Example:
DTM+799:20021231:102'

5. Segments Layout

Segment number: 64

SG28	- C	200000	-	LIN-PIA-IMD-MEA-QTY-ALI-DTM-MOA-GIN-QVR-FTX-SG32-SG33-SG34-SG37-SG38-SG39-SG43-SG49
SG33	- C	9999	-	RFF-DTM
RFF	- M	1	-	Reference

Function:

To specify a reference.

		EDIFACT	GS1	*	Description
C506	REFERENCE	M	**M**		
1153	Reference code qualifier	M an..3	**M**		AAL = Drawing number ACD = Additional reference number ADD = Analysis number/test number AGW = Scheme/plan number BO = Blanket order number CR = Customer reference number CT = Contract number GC = Government contract number IP = Import licence number LI = Line item reference number ON = Order number (buyer) PD = Promotion deal number PL = Price list number VN = Order number (supplier)
1154	Reference identifier	C an..70	**R**		
1156	Document line identifier	C an..6	**O**		
4000	Reference version identifier	C an..35	**N**		
1060	Revision identifier	C an..6	**N**		

Segment Notes:

This segment is used to identify references associated with the line item. This information may override what is specified in the heading section when the same qualifier is used. This segment may also be used to allocate a unique reference number to this line item in this order.

Example:
RFF+PL:AUG93RNG04:7'
Reference to the 7th line item (LIN segment) of PRICAT message 'AUG93RNG04'.

5. Segments Layout

Segment number: 65

SG28	- C	200000 -	LIN-PIA-IMD-MEA-QTY-ALI-DTM-MOA-GIN-QVR-FTX-SG32-SG33-SG34-SG37-SG38-SG39-SG43-SG49
SG33	- C	9999 -	RFF-DTM
DTM	- C	5 -	Date/time/period

Function:

To specify date, and/or time, or period.

		EDIFACT	GS1	*	Description
C507	DATE/TIME/PERIOD	M	**M**		
2005	Date or time or period function code qualifier	M an..3	**M**	*	171 = Reference date/time 194 = Start date/time 206 = End date/time
2380	Date or time or period value	C an..35	**R**		
2379	Date or time or period format code	C an..3	**R**		203 = CCYYMMDDHHMM

Segment Notes:

This segment is used to specify dates and times associated with the preceding RFF segment.

Example:
DTM+171:20020801:102'

5. Segments Layout

Segment number: 66

SG28	- C	200000 -	LIN-PIA-IMD-MEA-QTY-ALI-DTM-MOA-GIN-QVR-FTX-SG32-SG33-SG34-SG37-SG38-SG39-SG43-SG49
SG34	- C	99 -	PAC-QTY-SG36
PAC	- M	1 -	Package

Function:

To describe the number and type of packages/physical units.

		EDIFACT	GS1	*	Description
7224	Package quantity	C n..8	**O**		
C531	PACKAGING DETAILS	C	**O**		
7075	Packaging level code	C an..3	**O**		1 = Inner 3 = Outer
7233	Packaging related description code	C an..3	**O**		50 = Package barcoded EAN-13 or EAN-8 51 = Package barcoded ITF-14 52 = Package barcoded UCC or EAN-128
7073	Packaging terms and conditions code	C an..3	**O**		
C202	PACKAGE TYPE	C	**O**		
7065	Package type description code	C an..17	**A**		
1131	Code list identification code	C an..17	**O**		
3055	Code list responsible agency code	C an..3	**D**		
7064	Type of packages	C an..35	**O**		
C402	PACKAGE TYPE IDENTIFICATION	C	**N**		
7077	Description format code	M an..3			
7064	Type of packages	M an..35			
7143	Item type identification code	C an..3			
7064	Type of packages	C an..35			
7143	Item type identification code	C an..3			
C532	RETURNABLE PACKAGE DETAILS	C	**D**		Composite C532 is only used where the packaging being described is returnable. This composite identifies who is responsible for the payment of its return.
8395	Returnable package freight payment responsibility code	C an..3	**O**		1 = Paid by customer 3 = Paid by supplier
8393	Returnable package load contents code	C an..3	**N**		

Segment Notes:

This segment is used in those cases where despatch unit coding has not yet been implemented, not allowing direct ordering in LIN, yet requirements exist to define the despatch unit to be delivered.

Example:
PAC+4++CS'
Applying this example to the first line item, the instruction is to pack the 48 units ordered in the QTY at LIN level into 4 cases, i.e. into despatch units containing 12 ordered units each.

5. Segments Layout

Segment number: 67

SG28	- C	200000	-	LIN-PIA-IMD-MEA-QTY-ALI-DTM-MOA-GIN-QVR-FTX-SG32-SG33-SG34-SG37-SG38-SG39-SG43-SG49
SG34	- C	99	-	PAC-QTY-SG36
QTY	- C	5	-	Quantity

Function:

To specify a pertinent quantity.

		EDIFACT	GS1	*	Description
C186	QUANTITY DETAILS	M	**M**		
6063	Quantity type code qualifier	M an..3	**M**	*	52 = Quantity per pack
6060	Quantity	M an..35	**M**		
6411	Measurement unit code	C an..3	**D**		This DE is only used if the product ordered is a variable quantity product.

Segment Notes:

This segment is used to specify the total quantity per pack.

Example:
QTY+52:48:KGM'

5. Segments Layout

Segment number: 68

SG28	- C	200000 -	LIN-PIA-IMD-MEA-QTY-ALI-DTM-MOA-GIN-QVR-FTX-SG32-SG33-SG34-SG37-SG38-SG39-SG43-SG49
SG34	- C	99 -	PAC-QTY-SG36
SG36	- C	5 -	PCI-RFF-DTM-GIN
PCI	- M	1 -	Package identification

Function:

To specify markings and labels on individual packages or physical units.

		EDIFACT	GS1	*	Description
4233	Marking instructions code	C an..3	**A**		1 = Do not mark supplier's company name 2 = Mark customer's company name 3 = Mark customer's references 6 = Mark packages dimensions 7 = Mark net weight 8 = Mark gross weight 10 = Mark batch number 14 = Mark expiry date 16 = Buyer's instructions 17 = Supplier's instructions
C210	MARKS & LABELS	C	**D**		Composite C210 identifies specific marks or labels which the buyer wishes to have attached to the packaging.
7102	Shipping marks description	M an..35	**M**		
7102	Shipping marks description	C an..35	**O**		
7102	Shipping marks description	C an..35	**O**		
7102	Shipping marks description	C an..35	**O**		
7102	Shipping marks description	C an..35	**O**		
7102	Shipping marks description	C an..35	**O**		
7102	Shipping marks description	C an..35	**O**		
7102	Shipping marks description	C an..35	**O**		
7102	Shipping marks description	C an..35	**O**		
7102	Shipping marks description	C an..35	**O**		
8275	Container or package contents indicator code	C an..3	**N**		
C827	TYPE OF MARKING	C	**N**		
7511	Marking type code	M an..3			
1131	Code list identification code	C an..17			
3055	Code list responsible agency code	C an..3			

Segment Notes:

This segment is used to detail markings and labels on individual packages or physical units.

Example:
PCI+14'

5. Segments Layout

Segment number: 69

SG28	- C	200000 -	LIN-PIA-IMD-MEA-QTY-ALI-DTM-MOA-GIN-QVR-FTX-SG32-SG33-SG34-SG37-SG38-SG39-SG43-SG49
SG34	- C	99 -	PAC-QTY-SG36
SG36	- C	5 -	PCI-RFF-DTM-GIN
RFF	- C	1 -	Reference

Function:

To specify a reference.

		EDIFACT	GS1	*	Description
C506	REFERENCE	M	**M**		
1153	Reference code qualifier	M an..3	**M**		CT = Contract number IP = Import licence number ON = Order number (buyer) VN = Order number (supplier)
1154	Reference identifier	C an..70	**R**		
1156	Document line identifier	C an..6	**N**		
4000	Reference version identifier	C an..35	**N**		
1060	Revision identifier	C an..6	**N**		

Segment Notes:

This segment is used to provide references associated with the PCI segment.

Example:
RFF+CT:32455'

5. Segments Layout

Segment number: 70

SG28	- C	200000	-	LIN-PIA-IMD-MEA-QTY-ALI-DTM-MOA-GIN-QVR-FTX-SG32-SG33-SG34-SG37-SG38-SG39-SG43-SG49
SG34	- C	99	-	PAC-QTY-SG36
SG36	- C	5	-	PCI-RFF-DTM-GIN
DTM	- C	5	-	Date/time/period

Function:

To specify date, and/or time, or period.

		EDIFACT	GS1	*	Description
C507	DATE/TIME/PERIOD	M	**M**		
2005	Date or time or period function code qualifier	M an..3	**M**	*	171 = Reference date/time
2380	Date or time or period value	C an..35	**R**		
2379	Date or time or period format code	C an..3	**R**		102 = CCYYMMDD

Segment Notes:

This segment is used to specify dates and times associated with the preceding RFF segment.

Example:
DTM+171:20020801:102'

5. Segments Layout

Segment number: 71

SG28	- C	200000 -	LIN-PIA-IMD-MEA-QTY-ALI-DTM-MOA-GIN-QVR-FTX-SG32-SG33-SG34-SG37-SG38-SG39-SG43-SG49
SG34	- C	99 -	PAC-QTY-SG36
SG36	- C	5 -	PCI-RFF-DTM-GIN
GIN	- C	10 -	Goods identity number

Function:

To give specific identification numbers, either as single numbers or ranges.

		EDIFACT	GS1	*	Description
7405	Object identification code qualifier	M an..3	**M**	*	AW = Serial shipping container code BJ = Serial shipping container code BN = Serial number BX = Batch number SRV = GS1 Global Trade Item Number (GS1 Temporary Code)
C208	IDENTITY NUMBER RANGE	M	**M**		
7402	Object identifier	M an..35	**M**		
7402	Object identifier	C an..35	**O**		
C208	IDENTITY NUMBER RANGE	C	**O**		
7402	Object identifier	M an..35	**M**		
7402	Object identifier	C an..35	**O**		
C208	IDENTITY NUMBER RANGE	C	**O**		
7402	Object identifier	M an..35	**M**		
7402	Object identifier	C an..35	**O**		
C208	IDENTITY NUMBER RANGE	C	**O**		
7402	Object identifier	M an..35	**M**		
7402	Object identifier	C an..35	**O**		
C208	IDENTITY NUMBER RANGE	C	**O**		
7402	Object identifier	M an..35	**M**		
7402	Object identifier	C an..35	**O**		

Segment Notes:

This segment is used to indicate numbers which are to be marked on packages for the line items in the message.

Example:
GIN+AW+354123450000000014:354123450000000106'

5. Segments Layout

Segment number: 72

SG28	- C	200000 -	LIN-PIA-IMD-MEA-QTY-ALI-DTM-MOA-GIN-QVR-FTX-SG32-SG33-SG34-SG37-SG38-SG39-SG43-SG49
SG37	- C	9999 -	LOC-QTY-DTM
LOC	- M	1 -	Place/location identification

Function:

To identify a place or a location and/or related locations.

		EDIFACT	GS1	*	Description
3227	Location function code qualifier	M an..3	**M**	*	7 = Place of delivery
C517	LOCATION IDENTIFICATION	C	**A**		
3225	Location name code	C an..25	**R**		GLN - Format n13
1131	Code list identification code	C an..17	**O**		
3055	Code list responsible agency code	C an..3	**D**		9 = GS1 DE 3055 must be used if DE 3225 is used and does not contain an UN/LOCODE.
3224	Location name	C an..256	**O**		
C519	RELATED LOCATION ONE IDENTIFICATION	C	**O**		
3223	First related location name code	C an..25	**R**		Specify ultimate delivery location, e.g. a specific point on a works site. Global Location Number GLN - Format n13
1131	Code list identification code	C an..17	**O**		
3055	Code list responsible agency code	C an..3	**D**		DE 3055 must be used if DE 3223 is used and does not contain an UN/LOCODE. 9 = GS1
3222	First related location name	C an..70	**O**		
C553	RELATED LOCATION TWO IDENTIFICATION	C	**O**		
3233	Second related location name code	C an..25	**R**		Used to further detail the delivery location. Global Location Number GLN - Format n13
1131	Code list identification code	C an..17	**O**		
3055	Code list responsible agency code	C an..3	**D**		DE 3055 must be used if DE 3233 is used and does not contain an UN/LOCODE. 9 = GS1
3232	Second related location name	C an..70	**O**		
5479	Relation code	C an..3	**N**		

Segment Notes:

This segment is used to identify the location of delivery for a split delivery order.

Example:
LOC+7+4012345500004::9'

5. Segments Layout

Segment number: 73

SG28	- C	200000	-	LIN-PIA-IMD-MEA-QTY-ALI-DTM-MOA-GIN-QVR-FTX-SG32-SG33-SG34-SG37-SG38-SG39-SG43-SG49
SG37	- C	9999	-	LOC-QTY-DTM
QTY	- C	1	-	Quantity

Function:

To specify a pertinent quantity.

		EDIFACT	GS1	*	Description
C186	QUANTITY DETAILS	M	**M**		
6063	Quantity type code qualifier	M an..3	**M**	*	11 = Split quantity
6060	Quantity	M an..35	**M**		
6411	Measurement unit code	C an..3	**D**		This DE is only used if the product being ordered is a variable quantity product.

Segment Notes:

This segment is used to indicate the delivery quantity for the delivery location specified in the previous LOC segment. The total of all quantities specified in segment group 37 for the line, must equal the value for the total quantity detailed in the QTY segment at line level.

Example:
QTY+11:14'

5. Segments Layout

Segment number: 74

SG28	- C	200000 -	LIN-PIA-IMD-MEA-QTY-ALI-DTM-MOA-GIN-QVR-FTX-SG32-SG33-SG34-SG37-SG38-SG39-SG43-SG49
SG37	- C	9999 -	LOC-QTY-DTM
DTM	- C	5 -	Date/time/period

Function:

To specify date, and/or time, or period.

		EDIFACT	GS1	*	Description
C507	DATE/TIME/PERIOD	M	**M**		
2005	Date or time or period function code qualifier	M an..3	**M**	*	2 = Delivery date/time, requested 10 = Shipment date/time, requested 11 = Despatch date and/or time 61 = Cancel if not delivered by this date 63 = Delivery date/time, latest 64 = Delivery date/time, earliest 69 = Delivery date/time, promised for 200 = Pick-up/collection date/time of cargo 364 = Minimum shelf life remaining at time of despatch period X14 = Requested for delivery week commencing (GS1 Temporary Code)
2380	Date or time or period value	C an..35	**R**		
2379	Date or time or period format code	C an..3	**R**		102 = CCYYMMDD 203 = CCYYMMDDHHMM 718 = CCYYMMDD-CCYYMMDD

Segment Notes:

This segment is used to indicate the date/time on which the split delivery will take place to the location identified in the LOC segment.

Example:
DTM+2:20020915:102'
This example requests delivery on the 15th of September 2002.

DTM+63:200209181730:203'
This example states that the latest delivery date is the 18th of September 2002 at 5:30pm.

5. Segments Layout

Segment number: 75

SG28	- C	200000 -	LIN-PIA-IMD-MEA-QTY-ALI-DTM-MOA-GIN-QVR-FTX-SG32-SG33-SG34-SG37-SG38-SG39-SG43-SG49
SG38	- C	10 -	TAX-MOA
TAX	- M	1 -	Duty/tax/fee details

Function:

To specify relevant duty/tax/fee information.

		EDIFACT	GS1	*	Description
5283	Duty or tax or fee function code qualifier	M an..3	**M**		5 = Customs duty 7 = Tax
C241	DUTY/TAX/FEE TYPE	C	**D**		
5153	Duty or tax or fee type name code	C an..3	**O**		GST = Goods and services tax IMP = Import tax VAT = Value added tax
1131	Code list identification code	C an..17	**O**		
3055	Code list responsible agency code	C an..3	**D**		
5152	Duty or tax or fee type name	C an..35	**O**		
C533	DUTY/TAX/FEE ACCOUNT DETAIL	C	**O**		
5289	Duty or tax or fee account code	M an..6	**M**		
1131	Code list identification code	C an..17	**O**		
3055	Code list responsible agency code	C an..3	**D**		
5286	Duty or tax or fee assessment basis value	C an..15	**O**		
C243	DUTY/TAX/FEE DETAIL	C	**A**		
5279	Duty or tax or fee rate code	C an..7	**O**		
1131	Code list identification code	C an..17	**O**		
3055	Code list responsible agency code	C an..3	**D**		
5278	Duty or tax or fee rate	C an..17	**R**		
5273	Duty or tax or fee rate basis code	C an..12	**O**		
1131	Code list identification code	C an..17	**O**		
3055	Code list responsible agency code	C an..3	**D**		
5305	Duty or tax or fee category code	C an..3	**D**		A = Mixed tax rate E = Exempt from tax S = Standard rate
3446	Party tax identifier	C an..20	**O**		
1227	Calculation sequence code	C an..3	**N**		

Segment Notes:

This segment is used to identify the type and rate of tax that is applicable for the current line item. This segment is only used if the tax rate at line level differs from the rate specified in the header section.

5. Segments Layout

Segment number: 75

Example:
TAX+7+VAT+++:::17.5+S'

Dependency Notes:
DE C241 and 5305: Tax types and categories will differ from country to country. They are to be defined by national guidelines.

5. Segments Layout

Segment number: 76

SG28	- C	200000	-	LIN-PIA-IMD-MEA-QTY-ALI-DTM-MOA-GIN-QVR-FTX-SG32-SG33-SG34-SG37-SG38-SG39-SG43-SG49
SG38	- C	10	-	TAX-MOA
MOA	- C	1	-	Monetary amount

Function:

To specify a monetary amount.

		EDIFACT	GS1	*	Description
C516	MONETARY AMOUNT	M	**M**		
5025	Monetary amount type code qualifier	M an..3	**M**		124 = Tax amount 125 = Taxable amount
5004	Monetary amount	C n..35	**R**		
6345	Currency identification code	C an..3	**N**		
6343	Currency type code qualifier	C an..3	**N**		
4405	Status description code	C an..3	**N**		

Segment Notes:

This segment is used to indicate tax amounts related to the preceding TAX segment.

Example:
MOA+124:324.55'

5. Segments Layout

Segment number: 77

SG28	- C	200000	-	LIN-PIA-IMD-MEA-QTY-ALI-DTM-MOA-GIN-QVR-FTX-SG32-SG33-SG34-SG37-SG38-SG39-SG43-SG49
SG39	- C	999	-	NAD-SG42
NAD	- M	1	-	Name and address

Function:

To specify the name/address and their related function, either by C082 only and/or unstructured by C058 or structured by C080 thru 3207.

		EDIFACT	GS1	*	Description
3035	Party function code qualifier	M an..3	**M**		UD = Ultimate customer
C082	PARTY IDENTIFICATION DETAILS	C	**A**		
3039	Party identifier	M an..35	**M**		GLN -Format n13
1131	Code list identification code	C an..17	**O**		
3055	Code list responsible agency code	C an..3	**R**	*	9 = GS1
C058	NAME AND ADDRESS	C	**O**		This composite may only be used to fulfill the requirements of directive 2003/58/EC, article 4.
3124	Name and address description	M an..35	**M**		
3124	Name and address description	C an..35	**O**		
3124	Name and address description	C an..35	**O**		
3124	Name and address description	C an..35	**O**		
3124	Name and address description	C an..35	**O**		
C080	PARTY NAME	C	**D**		
3036	Party name	M an..35	**M**		
3036	Party name	C an..35	**O**		
3036	Party name	C an..35	**O**		
3036	Party name	C an..35	**O**		
3036	Party name	C an..35	**O**		
3045	Party name format code	C an..3	**O**		
C059	STREET	C	**D**		
3042	Street and number or post office box identifier	M an..35	**M**		
3042	Street and number or post office box identifier	C an..35	**O**		
3042	Street and number or post office box identifier	C an..35	**O**		
3042	Street and number or post office box identifier	C an..35	**O**		
3164	City name	C an..35	**D**		
C819	COUNTRY SUB-ENTITY DETAILS	C	**D**		
3229	Country sub-entity name code	C an..9	**O**		
1131	Code list identification code	C an..17	**O**		
3055	Code list responsible agency	C an..3	**O**		

5. Segments Layout

Segment number: 77

		EDIFACT	GS1	*	Description
	code				
3228	Country sub-entity name	C an..70	**O**		County/State, clear text.
3251	Postal identification code	C an..17	**D**		
3207	Country name code	C an..3	**D**		ISO 3166 two alpha code

Segment Notes:

This segment is used to specify the ultimate (end) customer for the current line item, i.e., the party sending the order will in turn sell the goods to, the party on whose behalf the buyer is acting as an agent.

Example:
NAD+UD+5412345000013::9'

Dependency Notes:
The following composites and data elements are only used when a coded name and address can not be used.
The affected composites and data elements are as follows:
C080 - C059 - 3164 - C819 - 3251 - 3207

5. Segments Layout

Segment number: 78

SG28	- C	200000 -	LIN-PIA-IMD-MEA-QTY-ALI-DTM-MOA-GIN-QVR-FTX-SG32-SG33-SG34-SG37-SG38-SG39-SG43-SG49
SG39	- C	999 -	NAD-SG42
SG42	- C	5 -	CTA-COM
CTA	- M	1 -	Contact information

Function:

To identify a person or a department to whom communication should be directed.

		EDIFACT	GS1	*	Description
3139	Contact function code	C an..3	**R**		BO = After business hours contact IC = Information contact
C056	DEPARTMENT OR EMPLOYEE DETAILS	C	**O**		
3413	Department or employee name code	C an..17	**O**		
3412	Department or employee name	C an..35	**O**		

Segment Notes:

This segment is used to provide contact and communications information for the ultimate customer identified in the NAD segment.

Example:
CTA+IC+:MARK CARTER'

5. Segments Layout

Segment number: 79

SG28	- C	200000 -	LIN-PIA-IMD-MEA-QTY-ALI-DTM-MOA-GIN-QVR-FTX-SG32-SG33-SG34-SG37-SG38-SG39-SG43-SG49
SG39	- C	999 -	NAD-SG42
SG42	- C	5 -	CTA-COM
COM	- C	5 -	Communication contact

Function:

To identify a communication number of a department or a person to whom communication should be directed.

		EDIFACT	GS1	*	Description
C076	COMMUNICATION CONTACT	M	**M**		
3148	Communication address identifier	M an..512	**M**		
3155	Communication address code qualifier	M an..3	**M**		AO = Uniform Resource Location (URL) EM = Electronic mail TE = Telephone

Segment Notes:

This segment is used to identify the communications number and the type of communications used for the person or department identified in the CTA segment.

Example:
COM+00448132445322:TE'

5. Segments Layout

Segment number: 80

SG28	- C	200000	-	LIN-PIA-IMD-MEA-QTY-ALI-DTM-MOA-GIN-QVR-FTX-SG32-SG33-SG34-SG37-SG38-SG39-SG43-SG49
SG43	- C	99	-	ALC-ALI-DTM-SG44-SG45-SG46-SG47-SG48
ALC	- M	1	-	Allowance or charge

Function:

To identify allowance or charge details.

		EDIFACT	GS1	*	Description
5463	Allowance or charge code qualifier	M an..3	**M**		A = Allowance C = Charge N = No allowance or charge
C552	ALLOWANCE/CHARGE INFORMATION	C	**O**		
1230	Allowance or charge identifier	C an..35	**D**		If code '69' is used in DE 5189, the agreement number must be specified in DE 1230.
5189	Allowance or charge identification code	C an..3	**O**		1 = Handling commission 32 = Courier fee 69 = Charge for a customer specific finish
4471	Settlement means code	C an..3	**O**		3 = Vendor check/cheque to customer 5 = Charge to be paid by vendor 6 = Charge to be paid by customer
1227	Calculation sequence code	C an..3	**O**		1 = First step of calculation 2 = Second step of calculation etc, etc, etc..... 9 = Ninth step of calculation The calculation sequence indicator is used when multiple allowances and/or charges are applicable. If various allowances and/or charges percentages, quantities, monetary amounts or rates are applicable to the same base price, then the calculation sequence indicator will always equal one. If the various allowances and/or charges are applied against a fluctuating price (constantly because of the application of other allowances and/or charges) then the sequence of calculation is indicated using this data element. If the allowance or charge is not to be applied against a fixed price then the calculation sequence indicator must be included.
C214	SPECIAL SERVICES IDENTIFICATION	C	**D**		This composite is only used if the buyer knows the type of allowance or charge.
7161	Special service description code	C an..3	**R**		DDA = Dealer discount/allowance (GS1 Temporary Code) TD = Trade discount X40 = Allowance/charge regulated by law (GS1 Temporary Code)
1131	Code list identification code	C an..17	**O**		
3055	Code list responsible agency code	C an..3	**D**	*	9 = GS1 91 = Assigned by supplier or supplier's agent 92 = Assigned by buyer or buyer's agent This data element is only used if GS1 Codes are used in data element 7161.
7160	Special service description	C an..35	**O**		

5. Segments Layout

Segment number: 80

	EDIFACT	GS1	*	Description
7160 Special service description	C an..35	**O**		

Segment Notes:

This segment is used to specify any allowances or charges which are applicable for the current line item. If allowances and charges are applicable for the same line item they must be indicated using separate repeats of segment group 43.
As the calculation price type (data element 5125 PRI segment) used in the purchase order is always a net price, allowances and/or charges specified in the ALC segment are for information purposes only.

Example:
ALC+A+++1'

5. Segments Layout

Segment number: 81

SG28	- C	200000 -	LIN-PIA-IMD-MEA-QTY-ALI-DTM-MOA-GIN-QVR-FTX-SG32-SG33-SG34-SG37-SG38-SG39-SG43-SG49
SG43	- C	99 -	ALC-ALI-DTM-SG44-SG45-SG46-SG47-SG48
ALI	- C	5 -	Additional information

Function:

To indicate that special conditions due to the origin, customs preference, fiscal or commercial factors are applicable.

		EDIFACT	GS1	*	Description
3239	Country of origin name code	C an..3	**O**		Use ISO 3166 two alpha
9213	Duty regime type code	C an..3	**O**		1 = Origin subject to EC/EFTA preference 2 = Origin subject to other preference agreement
4183	Special condition code	C an..3	**O**		6 = Subject to bonus 8 = Subject to discount 174 = Product not genetically modified
4183	Special condition code	C an..3	**O**		
4183	Special condition code	C an..3	**O**		
4183	Special condition code	C an..3	**O**		
4183	Special condition code	C an..3	**O**		

Segment Notes:

This segment is used to indicate any special conditions related to the allowances and/or charges specified in the ALC segment.

Example:
ALI+++8'

5. Segments Layout

Segment number: 82

SG28	- C	200000 -	LIN-PIA-IMD-MEA-QTY-ALI-DTM-MOA-GIN-QVR-FTX-SG32-SG33-SG34-SG37-SG38-SG39-SG43-SG49
SG43	- C	99 -	ALC-ALI-DTM-SG44-SG45-SG46-SG47-SG48
DTM	- C	5 -	Date/time/period

Function:

To specify date, and/or time, or period.

		EDIFACT	GS1	*	Description
C507	DATE/TIME/PERIOD	M	**M**		
2005	Date or time or period function code qualifier	M an..3	**M**	*	194 = Start date/time 206 = End date/time
2380	Date or time or period value	C an..35	**R**		
2379	Date or time or period format code	C an..3	**R**		102 = CCYYMMDD 203 = CCYYMMDDHHMM

Segment Notes:

This segment is used to indicate any dates related to the allowances or/charges information specified in the ALC segment.

Example:
DTM+194:20021101:102'
DTM+206:20021115:102'
This example indicates that the allowances and/or charges are to start on the 1st of November 2002 and finish on the 15th of November 2002.

5. Segments Layout

Segment number: 83

SG28	- C	200000	-	LIN-PIA-IMD-MEA-QTY-ALI-DTM-MOA-GIN-QVR-FTX-SG32-SG33-SG34-SG37-SG38-SG39-SG43-SG49
SG43	- C	99	-	ALC-ALI-DTM-SG44-SG45-SG46-SG47-SG48
SG44	- C	1	-	QTY-RNG
QTY	- M	1	-	Quantity

Function:

To specify a pertinent quantity.

		EDIFACT	GS1	*	Description
C186	QUANTITY DETAILS	M	**M**		
6063	Quantity type code qualifier	M an..3	**M**	*	1 = Discrete quantity 193 = Free quantity included
6060	Quantity	M an..35	**M**		
6411	Measurement unit code	C an..3	**D**		This data element is only used if the current product is of variable quantity.

Segment Notes:

This segment is used to specify quantity allowance/charge information.

Example:
QTY+1:14'

5. Segments Layout

Segment number: 84

SG28	- C	200000	-	LIN-PIA-IMD-MEA-QTY-ALI-DTM-MOA-GIN-QVR-FTX-SG32-SG33-SG34-SG37-SG38-SG39-SG43-SG49
SG43	- C	99	-	ALC-ALI-DTM-SG44-SG45-SG46-SG47-SG48
SG44	- C	1	-	QTY-RNG
RNG	- C	1	-	Range details

Function:

To identify a range.

		EDIFACT	GS1	*	Description
6167	Range type code qualifier	M an..3	**M**		1 = Allowance range 2 = Charge range
C280	RANGE	C	**R**		
6411	Measurement unit code	M an..3	**M**		
6162	Range minimum value	C n..18	**O**		
6152	Range maximum value	C n..18	**O**		

Segment Notes:

This segment is used to specify ranges which apply to the previous QTY segment.

Example:
RNG+1+KGM:15'

5. Segments Layout

Segment number: 85

SG28	- C	200000	-	LIN-PIA-IMD-MEA-QTY-ALI-DTM-MOA-GIN-QVR-FTX-SG32-SG33-SG34-SG37-SG38-SG39-SG43-SG49
SG43	- C	99	-	ALC-ALI-DTM-SG44-SG45-SG46-SG47-SG48
SG45	- C	1	-	PCD-RNG
PCD	- M	1	-	Percentage details

Function:

To specify percentage information.

		EDIFACT	GS1	*	Description
C501	PERCENTAGE DETAILS	M	**M**		
5245	Percentage type code qualifier	M an..3	**M**		3 = Allowance or charge
5482	Percentage	C n..10	**R**		
5249	Percentage basis identification code	C an..3	**O**		
1131	Code list identification code	C an..17	**O**		
3055	Code list responsible agency code	C an..3	**D**		
4405	Status description code	C an..3	**N**		

Segment Notes:

This segment is used to specify percentage allowance/charge information.

Example:
PCD+3:1.25'

5. Segments Layout

Segment number: 86

SG28	- C	200000	-	LIN-PIA-IMD-MEA-QTY-ALI-DTM-MOA-GIN-QVR-FTX-SG32-SG33-SG34-SG37-SG38-SG39-SG43-SG49
SG43	- C	99	-	ALC-ALI-DTM-SG44-SG45-SG46-SG47-SG48
SG45	- C	1	-	PCD-RNG
RNG	- C	1	-	Range details

Function:

To identify a range.

		EDIFACT	GS1	*	Description
6167	Range type code qualifier	M an..3	**M**		1 = Allowance range 2 = Charge range
C280	RANGE	C	**R**		
6411	Measurement unit code	M an..3	**M**		
6162	Range minimum value	C n..18	**O**		
6152	Range maximum value	C n..18	**O**		

Segment Notes:

This segment is used to specify ranges which apply to the previous PCD segment.

Example:
RNG+1+KGM:250:600'

5. Segments Layout

Segment number: 87

SG28	- C	200000 -	LIN-PIA-IMD-MEA-QTY-ALI-DTM-MOA-GIN-QVR-FTX-SG32-SG33-SG34-SG37-SG38-SG39-SG43-SG49
SG43	- C	99 -	ALC-ALI-DTM-SG44-SG45-SG46-SG47-SG48
SG46	- C	2 -	MOA-RNG
MOA	- M	1 -	Monetary amount

Function:

To specify a monetary amount.

		EDIFACT	GS1	*	Description
C516	MONETARY AMOUNT	M	**M**		
5025	Monetary amount type code qualifier	M an..3	**M**		23 = Charge amount 178 = Exact amount 204 = Allowance amount
5004	Monetary amount	C n..35	**R**		
6345	Currency identification code	C an..3	**O**		Use ISO 4217 three alpha
6343	Currency type code qualifier	C an..3	**O**		
4405	Status description code	C an..3	**O**		

Segment Notes:

This segment is used to specify monetary amount allowance/charge information.

Example:
MOA+23:500'

5. Segments Layout

Segment number: 88

SG28	- C	200000	-	LIN-PIA-IMD-MEA-QTY-ALI-DTM-MOA-GIN-QVR-FTX-SG32-SG33-SG34-SG37-SG38-SG39-SG43-SG49
SG43	- C	99	-	ALC-ALI-DTM-SG44-SG45-SG46-SG47-SG48
SG46	- C	2	-	MOA-RNG
RNG	- C	1	-	Range details

Function:

To identify a range.

		EDIFACT	GS1	*	Description
6167	Range type code qualifier	M an..3	**M**		3 = Monetary range
C280	RANGE	C	**R**		
6411	Measurement unit code	M an..3	**M**		
6162	Range minimum value	C n..18	**O**		
6152	Range maximum value	C n..18	**O**		

Segment Notes:

This segment is used to specify ranges which apply to the previous MOA segment.

Example:
RNG+3+KGM:800:1200'

5. Segments Layout

Segment number: 89

SG28	- C	200000	-	LIN-PIA-IMD-MEA-QTY-ALI-DTM-MOA-GIN-QVR-FTX-SG32-SG33-SG34-SG37-SG38-SG39-SG43-SG49
SG43	- C	99	-	ALC-ALI-DTM-SG44-SG45-SG46-SG47-SG48
SG47	- C	1	-	RTE-RNG
RTE	- M	1	-	Rate details

Function:

To specify rate information.

		EDIFACT	GS1	*	Description
C128	RATE DETAILS	M	**M**		
5419	Rate type code qualifier	M an..3	**M**		1 = Allowance rate 2 = Charge rate
5420	Unit price basis rate	M n..15	**M**		
5284	Unit price basis value	C n..9	**A**		
6411	Measurement unit code	C an..3	**O**		
4405	Status description code	C an..3	**N**		

Segment Notes:

This segment is used to specify rate allowance/charge information.

Example:
RTE+2:5.5'

5. Segments Layout

Segment number: 90

SG28	- C	200000	-	LIN-PIA-IMD-MEA-QTY-ALI-DTM-MOA-GIN-QVR-FTX-SG32-SG33-SG34-SG37-SG38-SG39-SG43-SG49
SG43	- C	99	-	ALC-ALI-DTM-SG44-SG45-SG46-SG47-SG48
SG47	- C	1	-	RTE-RNG
RNG	- C	1	-	Range details

Function:

To identify a range.

		EDIFACT	GS1	*	Description
6167	Range type code qualifier	M an..3	**M**		1 = Allowance range 2 = Charge range
C280	RANGE	C	**R**		
6411	Measurement unit code	M an..3	**M**		
6162	Range minimum value	C n..18	**O**		
6152	Range maximum value	C n..18	**O**		

Segment Notes:

This segment is used to specify ranges which apply to the previous RTE segment.

Example:
RNG+2+KGM:20:100'

5. Segments Layout

Segment number: 91

SG28	- C	200000 -	LIN-PIA-IMD-MEA-QTY-ALI-DTM-MOA-GIN-QVR-FTX-SG32-SG33-SG34-SG37-SG38-SG39-SG43-SG49
SG43	- C	99 -	ALC-ALI-DTM-SG44-SG45-SG46-SG47-SG48
SG48	- C	5 -	TAX-MOA
TAX	- M	1 -	Duty/tax/fee details

Function:

To specify relevant duty/tax/fee information.

		EDIFACT	GS1	*	Description
5283	Duty or tax or fee function code qualifier	M an..3	**M**		5 = Customs duty 7 = Tax
C241	DUTY/TAX/FEE TYPE	C	**D**		
5153	Duty or tax or fee type name code	C an..3	**O**		GST = Goods and services tax VAT = Value added tax
1131	Code list identification code	C an..17	**O**		
3055	Code list responsible agency code	C an..3	**D**		
5152	Duty or tax or fee type name	C an..35	**O**		
C533	DUTY/TAX/FEE ACCOUNT DETAIL	C	**O**		
5289	Duty or tax or fee account code	M an..6	**M**		
1131	Code list identification code	C an..17	**O**		
3055	Code list responsible agency code	C an..3	**D**		
5286	Duty or tax or fee assessment basis value	C an..15	**O**		
C243	DUTY/TAX/FEE DETAIL	C	**A**		
5279	Duty or tax or fee rate code	C an..7	**O**		
1131	Code list identification code	C an..17	**O**		
3055	Code list responsible agency code	C an..3	**D**		
5278	Duty or tax or fee rate	C an..17	**R**		
5273	Duty or tax or fee rate basis code	C an..12	**O**		
1131	Code list identification code	C an..17	**O**		
3055	Code list responsible agency code	C an..3	**D**		
5305	Duty or tax or fee category code	C an..3	**D**		A = Mixed tax rate E = Exempt from tax S = Standard rate
3446	Party tax identifier	C an..20	**N**		
1227	Calculation sequence code	C an..3	**N**		

Segment Notes:

This segment is used to specify any taxes or duties which are related to the allowance or charge for the current line item.

5. Segments Layout

Segment number: 91

Example:
TAX+7+VAT+++:::17.5+S'

Dependency Notes:
DE C241 and 5305: Tax types and categories will differ from country to country. They are to be defined by national guidelines.

5. Segments Layout

Segment number: 92

SG28	- C	200000	-	LIN-PIA-IMD-MEA-QTY-ALI-DTM-MOA-GIN-QVR-FTX-SG32-SG33-SG34-SG37-SG38-SG39-SG43-SG49
SG43	- C	99	-	ALC-ALI-DTM-SG44-SG45-SG46-SG47-SG48
SG48	- C	5	-	TAX-MOA
MOA	- C	1	-	Monetary amount

Function:

To specify a monetary amount.

		EDIFACT	GS1	*	Description
C516	MONETARY AMOUNT	M	**M**		
5025	Monetary amount type code qualifier	M an..3	**M**		124 = Tax amount 125 = Taxable amount
5004	Monetary amount	C n..35	**R**		
6345	Currency identification code	C an..3	**N**		
6343	Currency type code qualifier	C an..3	**N**		
4405	Status description code	C an..3	**N**		

Segment Notes:

This segment is used to specify monetary amounts related to the previous TAX segment.

Example:
MOA+124:48.90'

5. Segments Layout

Segment number: 93

SG28	- C	200000 -	LIN-PIA-IMD-MEA-QTY-ALI-DTM-MOA-GIN-QVR-FTX-SG32-SG33-SG34-SG37-SG38-SG39-SG43-SG49
SG49	- C	10 -	TDT
TDT	- M	1 -	Details of transport

Function:

To specify the transport details such as mode of transport, means of transport, its conveyance reference number and the identification of the means of transport.
The segment may be pointed to by the TPL segment.

		EDIFACT	GS1	*	Description
8051	Transport stage code qualifier	M an..3	**M**		12 = At departure 13 = At destination 20 = Main-carriage transport
8028	Means of transport journey identifier	C an..17	**O**		Reference number covering the transport.
C220	MODE OF TRANSPORT	C	**A**		
8067	Transport mode name code	C an..3	**R**		
8066	Transport mode name	C an..17	**N**		
C228	TRANSPORT MEANS	C	**O**		Data Elements 8179 and 8178 are only used when the type of transport must be specifically identified, that is, a generic description such as road transport is unsuitable.
8179	Transport means description code	C an..8	**D**		23 = Rail bulk car 31 = Truck
8178	Transport means description	C an..17	**D**		
C040	CARRIER	C	**O**		
3127	Carrier identifier	C an..17	**A**		Global Location Number GLN - Format n13
1131	Code list identification code	C an..17	**O**		
3055	Code list responsible agency code	C an..3	**D**		9 = GS1
3128	Carrier name	C an..35	**O**		
8101	Transit direction indicator code	C an..3	**O**		BS = Buyer to supplier SB = Supplier to buyer
C401	EXCESS TRANSPORTATION INFORMATION	C	**N**		
8457	Excess transportation reason code	M an..3			
8459	Excess transportation responsibility code	M an..3			
7130	Customer shipment authorisation identifier	C an..17			
C222	TRANSPORT IDENTIFICATION	C	**O**		
8213	Transport means identification name identifier	C an..9	**O**		
1131	Code list identification code	C an..17	**O**		
3055	Code list responsible agency code	C an..3	**D**		DE 3055 must be used if DE 8213 is used.

5. Segments Layout

Segment number: 93

		EDIFACT	GS1	*	Description
8212	Transport means identification name	C an..35	**R**		Vehicle license plate/Aircraft number.
8453	Transport means nationality code	C an..3	**O**		ISO 3166 two alpha code
8281	Transport means ownership indicator code	C an..3	**N**		

Segment Notes:

The TDT segment can be used to specify transport information for the line item, such as requesting an express transport service. It overrides any transport details specified in the TDT segment at the heading level of the message.

Example:
TDT+20++30+31'

5. Segments Layout

Segment number: 94

UNS - M 1 - Section control				
Function: To separate header, detail and summary sections of a message. Notes: To be used by message designers only when required to avoid ambiguities.				
	EDIFACT	GS1	*	Description
0081 Section identification	M a1	**M**	*	S = Detail/summary section separation
Segment Notes: This segment is used to separate the detail and summary sections of the message. Example: UNS+S'				

5. Segments Layout

Segment number: 95

MOA	- C	99 - Monetary amount			
Function: To specify a monetary amount.					
		EDIFACT	GS1	*	Description
C516	MONETARY AMOUNT	M	**M**		
5025	Monetary amount type code qualifier	M an..3	**M**		79 = Total line items amount 86 = Message total monetary amount 176 = Message total duty/tax/fee amount 259 = Total charges 260 = Total allowances
5004	Monetary amount	C n..35	**R**		
6345	Currency identification code	C an..3	**N**		
6343	Currency type code qualifier	C an..3	**N**		
4405	Status description code	C an..3	**N**		

Segment Notes:

This segment is used to indicate total amounts for the order.

Example:
MOA+79:15000'
MOA+259:400'
MOA+260:1800'
Assuming that the currency of the order is EURO, the total value of the line items identified in the message is 15000 EURO, with the total value of charges and allowances equalling 400 and 1800 EURO respectively.

5. Segments Layout

Segment number: 96

CNT - C 10 - Control total					
Function: To provide control total.					
		EDIFACT	GS1	*	Description
C270	CONTROL	M	**M**		
6069	Control total type code qualifier	M an..3	**M**	*	1 = Total value of the quantity segments at line level in a message 2 = Number of line items in message 7 = Total gross weight 10 = Total number of consignments 15 = Total consignment, cube 16 = Total number of equipment 29 = Total net weight of consignment When using code '1', the value expressed in data element 6066 will be the addition of all the values of data element 6060 at LIN level.
6066	Control total value	M n..18	**M**		
6411	Measurement unit code	C an..3	**O**		
Segment Notes: This segment is used to provide message control totals. Example: CNT+2:4' There are four LIN segments in the current message.					

5. Segments Layout

Segment number: 97

UNT - M 1 - Message trailer					
Function: To end and check the completeness of a message. Notes: 1. 0062, the value shall be identical to the value in 0062 in the corresponding UNH segment.					
		EDIFACT	GS1	*	Description
0074	Number of segments in a message	M n..10	**M**		The total number of segments in the message is detailed here.
0062	Message reference number	M an..14	**M**		The message reference number detailed here should equal the one specified in the UNH segment.
Segment Notes: This segment is a mandatory UN/EDIFACT segment. It must always be the last segment in the message. Example: UNT+112+ME000001'					

5. Segments Layout

Segment number: 98

UNZ - M 1 - Interchange trailer					
Function: To end and check the completeness of an interchange. Notes: 1. 0020, the value shall be identical to the value in 0020 in the corresponding UNB segment.					
		EDIFACT	GS1	*	Description
0036	Interchange control count	M n..6	**M**		Number of messages or functional groups within an interchange.
0020	Interchange control reference	M an..14	**M**		Identical to DE 0020 in UNB segment.
Segment Notes: This segment is used to provide the trailer of an interchange. DE 0036: If functional groups are used, this is the number of functional groups within the interchange. If functional groups are not used, this is the number of messages within the interchange. UNZ+5+12345555'					

6. Examples

The following is an example of a simple purchase order for one line item between a buyer identified by GLN 5412345000013 and a supplier identified by GLN 4012345500004.

The order is placed the 30th August 2002. It is based on a contract drawn 25th August 2002 with reference 652744. The purchase order buyer's reference is 128576.

The buyer orders 48 units of the product identified by GTIN 400862141404 at a net unit price of 14.58 pounds sterling for a total item amount of 699.84 pounds sterling. The net unit price for the product is covered by a contract specific to that product dated the 1st August 2002 with a reference number of AUG93RNG04.

A currency exchange rate of 1.67 Euros to a one pound sterling valid for the month of August 2002 is specified. The product is a standard rated VAT item with a VAT rate of 17.5%. The buyer’s internal product code for the product is identified as ABC1234.

The buyer requests that the seller mark the expiry date for the products on the product packaging. The delivery of the product is requested for two locations. Both locations are to get 24 pieces, location 3312345502000 has requested delivery for the 15th of September 2002, and location 3312345501003 has requested delivery for 13th of September 2002.

Purchase Order message:

UNH+ME000001+ORDERS:D:01B:UN:EAN010'	Message header
BGM+220+128576+9'	Order number 128576
DTM+137:20020830:102'	Message date 30th of August 2002
PAI+::42’	Instruction to pay in Bank Account
ALI+++136’	Group conditions apply to the entire ORDER
FTX+ZZZ+1+001::91’	Free text mutually defined
RFF+CT:652744'	Order is based on contract number 652744
DTM+171:20020825:102'	Date of contract 25th of August 2002
NAD+BY+5412345000013::9'	Buyer is identified by GLN 5412345000013
RFF+VA:87765432'	Buyer’s VAT number is 87765432
CTA+OC+:P FORGET'	Order contact is PForget
COM+0044715632478:TE'	Telephone number of order contact
NAD+SU+4012345500004::9'	Supplier is identified by GLN 4012345500004
RFF+VA:56225432'	Supplier’s VAT number is 56225432
CUX+2:GBP:9+3:EUR:4+1.67’	Ordering currency is Pounds Sterling with the invoicing currency identified as Euros The exchange rate between them is 1 Pound Sterling equals 1.67 Euros
DTM+134:2002080120020831:718'	Period on which rate of exchange date is based is the 1st of August 2002 - 31st of August 2002
TDT+20++30+31'	Order requests that the main carriage transport used to deliver the goods is a truck
TOD+3++CIF:2E:9'	Terms of delivery are to be Cost, Insurance and Freight
LOC+1+BE-BRU’	The named port is Brussels

6. Examples

LIN+1++4000862141404:SRV'	First product order is identified by GTIN 4000862141404
PIA+1+ABC1234:IN'	In addition the buyer's part number ABC1234 is provided
IMD+C++TU::9'	The ordered item is a traded unit
QTY+21:48'	Ordered quantity is 48 units
MOA+203:699.84'	Value of order line is 699.84 Pounds Sterling
PRI+AAA:14.58:CT:AAE:1:KGM'	Fixed net calculation price is 14.58 Pounds Sterling
RFF+PL:AUG93RNG04'	Price is taken from the price list AUG93RNG04
DTM+171:20020801:102'	Price list date 1st of August 2002
PAC+2+:51+CS'	Two packages (cases) barcoded with ITF14
PCI+14'	The expiry date of the product is to be marked on it's packaging
LOC+7+3312345502000::9'	The second place to which the product is to be delivered is identified by GLN 3312345502000
QTY+11:24'	The quantity to be delivered at this location is 24
DTM+2:20020915:102'	The quantity should be delivered on the 15th of September 2002
LOC+7+3312345501003::9'	The first place to which the product is to be delivered is identified by GLN 3312345501003
QTY+11:24'	The quantity to be delivered at this location is 24
DTM+2:20020913:102'	The quantity should be delivered on the 13th of September 2002
TAX+7+VAT+++:::17.5+S'	The product is subject to the standard VAT rate of 17.5 %
UNS+S'	Message detail/summary separator
CNT+2:1'	Count of the number of LIN segments in the message
UNT+39+ME000001'	Total number of segments in the message equals 39

Note:
The EDI interchange will include the UNB..UNZ segments and, if applicable, the UNG..UNE segments. (see Part I, section 5.7)