EANCOM® 2002 S4

IFTMAN

Arrival notice message

Edition 2016 Upd. 2021

1. Introduction 2
2. Message Structure Chart 4
3. Branching Diagram 6
4. Segments Description 11
5. Segments Layout 15
6. Example(s) 72

1. Introduction

Status

MESSAGE TYPE	: IFTMAN
REFERENCE DIRECTORY	: D.01B
EANCOM® SUBSET VERSION	: 003

Definition

A message from the party providing forwarding and/or transport services, to the party such as has been indicated in the contract, giving notice and details of the arrival of a consignment. In addition the message may be sent by the consignee to provide proof of delivery for a carrier.

Principles

The message is a single consignment message which can be used by all modes of transport for the forwarding and transport of goods from any origin to any destination, regardless of route or prevailing commercial practice.

The arrival notice is intended to provide arrival information to the notify party at the place of destination of the transport. A notify party might be the consignee or his agent or the customs broker depending on the custom of the port or the conditions in the contract. A copy of the arrival notice may be sent to the consignor for information purposes.

One arrival notice message should always equal one consignment.

In addition to the main principles detailed above, a number of general principles also apply;

- A consignment may contain several goods items.
- A consignment is identified by a consignors reference number (code CU) qualified in the RFF segment.
- Goods items may or may not be containerised.
- Goods items may be transported in one or more containers, and a single container may contain one or more goods items.
- One goods item may be related to one or more customs tariff codes.
- Goods items related to one customs tariff code may be carried in one or more containers.
- The arrival notice message may also be used by a consignee to provide proof of delivery for a carrier.
- Transport devices, which have the ability of powered movement on their own, are specified in the transport details group. Other load or transport devices are specified as equipment.
- Packaging for goods items can be expressed at up to three levels.
- A goods item consists of one or more despatch units that adhere to the same package type and goods description.
- A despatch unit is the unit of cargo that will be handled and to which an SSCC can be affixed.

A number of generic transport terms are used in this specification, to be described as:

CONSIGNEE
the organisation (party) which has the intention to receive the goods.

CONSIGNOR
the party ordering transport, orders a carrier to collect goods for transportation.

CONSIGNMENT
a collection of goods items to be transported from one or many despatch locations to one or many delivery

1. Introduction

locations. (synonym: shipment).

CARRIER
the party contracted by the consignor or forwarder to transport goods.

DESPATCH LOCATION
the physical location from which goods for transport are shipped.

DELIVERY LOCATION
the physical location to which goods for transport are finally delivered.

EQUIPMENT
material resources necessary to facilitate the transport and handling of cargo. Transport equipment does under the given circumstances not have the ability to move by its own propulsion (e.g. sea container, trailer, unit load device, pallet).

FORWARDER
the party contracted by the consignor to arrange to have the goods transported.

GOODS ITEM
a collection of products normally grouped together for transport purposes, e.g. 12 pallets of foodstuffs.

LINE ITEM
a specific product identified and defined for trade purposes, e.g. a case of flour containing 24 packets of 250 grams.

MODE OF TRANSPORT
the method of transport used for the conveyance of goods or persons, e.g. by rail, by road, by sea.

MEANS OF TRANSPORT
the vehicle used for the transport of goods or persons, e.g. aircraft, truck, vessel.

NOTIFY PARTY
the party to be notified of the arrival of goods.

PLACE OF ACCEPTANCE
the place at which the responsibility of the carrier starts.

PLACE OF DELIVERY
the place at which the **responsibility** of the carrier ends.

TYPE OF MEANS OF TRANSPORT
the type of vehicle used in the transport process, e.g. wide body, tank truck, passenger vessel.

TYPE OF EQUIPMENT
the type of material used, e.g. 40 feet container, four way pallet, mafi trailer.

2. Message Structure Chart

UNA	1	C	1	- Service string advice
UNB	2	M	1	- Interchange header
Arrival Notice Heading Section				
UNH	3	M	1	- Message header
BGM	4	M	1	- Beginning of message
DTM	5	C	9	- Date/time/period
TSR	6	C	9	- Transport service requirements
MOA	7	C	99	- Monetary amount
FTX	8	C	99	- Free text
CNT	9	C	9	- Control total
SG1		C	99	- LOC
LOC	10	M	1	- Place/location identification
SG3		C	99	- RFF-DTM
RFF	11	M	1	- Reference
DTM	12	C	9	- Date/time/period
SG8		C	99	- TDT-DTM-SG9
TDT	13	M	1	- Details of transport
DTM	14	C	9	- Date/time/period
SG9		C	99	- LOC
LOC	15	M	1	- Place/location identification
SG11		C	99	- NAD-SG12-SG15
NAD	16	M	1	- Name and address
SG12		C	9	- CTA-COM
CTA	17	M	1	- Contact information
COM	18	C	9	- Communication contact
SG15		C	9	- RFF
RFF	19	M	1	- Reference
Arrival Notice Detail Section				
SG18		C	999	- GID-TMP-RNG-FTX-SG19-SG20-SG21-SG22-SG23-SG27-SG30
GID	20	M	1	- Goods item details
TMP	21	C	1	- Temperature
RNG	22	C	1	- Range details
FTX	23	C	9	- Free text
SG19		C	9	- NAD-DTM
NAD	24	M	1	- Name and address
DTM	25	C	1	- Date/time/period
SG20		C	99	- MEA-EQN
MEA	26	M	1	- Measurements
EQN	27	C	1	- Number of units
SG21		C	99	- DIM-EQN
DIM	28	M	1	- Dimensions
EQN	29	C	1	- Number of units
SG22		C	9	- RFF
RFF	30	M	1	- Reference
SG23		C	9	- PCI-GIN
PCI	31	M	1	- Package identification
GIN	32	C	9	- Goods identity number
SG27		C	999	- SGP
SGP	33	M	1	- Split goods placement
SG30		C	99	- DGS-FTX-SG31-SG32
DGS	34	M	1	- Dangerous goods
FTX	35	C	99	- Free text
SG31		C	9	- CTA-COM
CTA	36	M	1	- Contact information
COM	37	C	9	- Communication contact
SG32		C	9	- MEA-EQN
MEA	38	M	1	- Measurements

2. Message Structure Chart

EQN	39	C	1	- Number of units
SG35		C	999	- EQD-MEA-DIM-SEL-SG37
EQD	40	M	1	- Equipment details
MEA	41	C	9	- Measurements
DIM	42	C	9	- Dimensions
SEL	43	C	99	- Seal number
SG37		C	9	- NAD
NAD	44	M	1	- Name and address

Arrival Notice Summary Section

UNT	45	M	1	- Message trailer
UNZ	46	M	1	- Interchange trailer

3. Branching Diagram

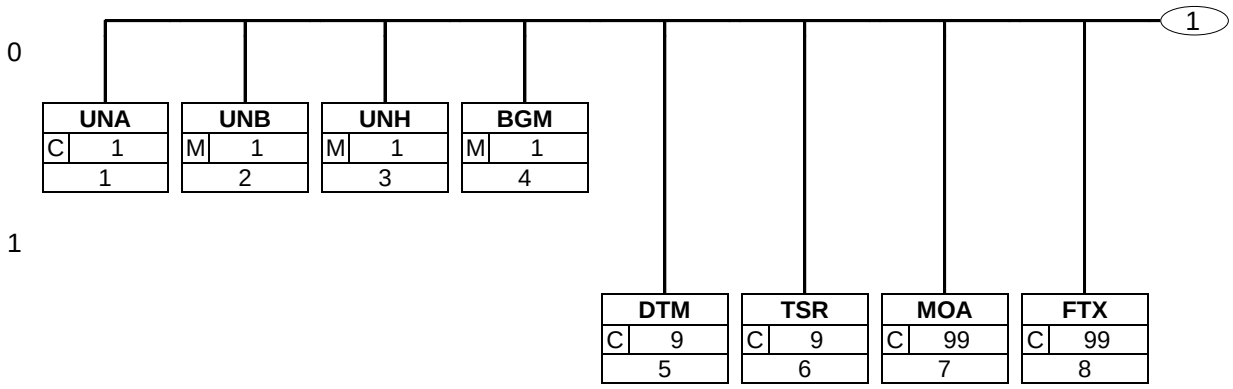

3. Branching Diagram

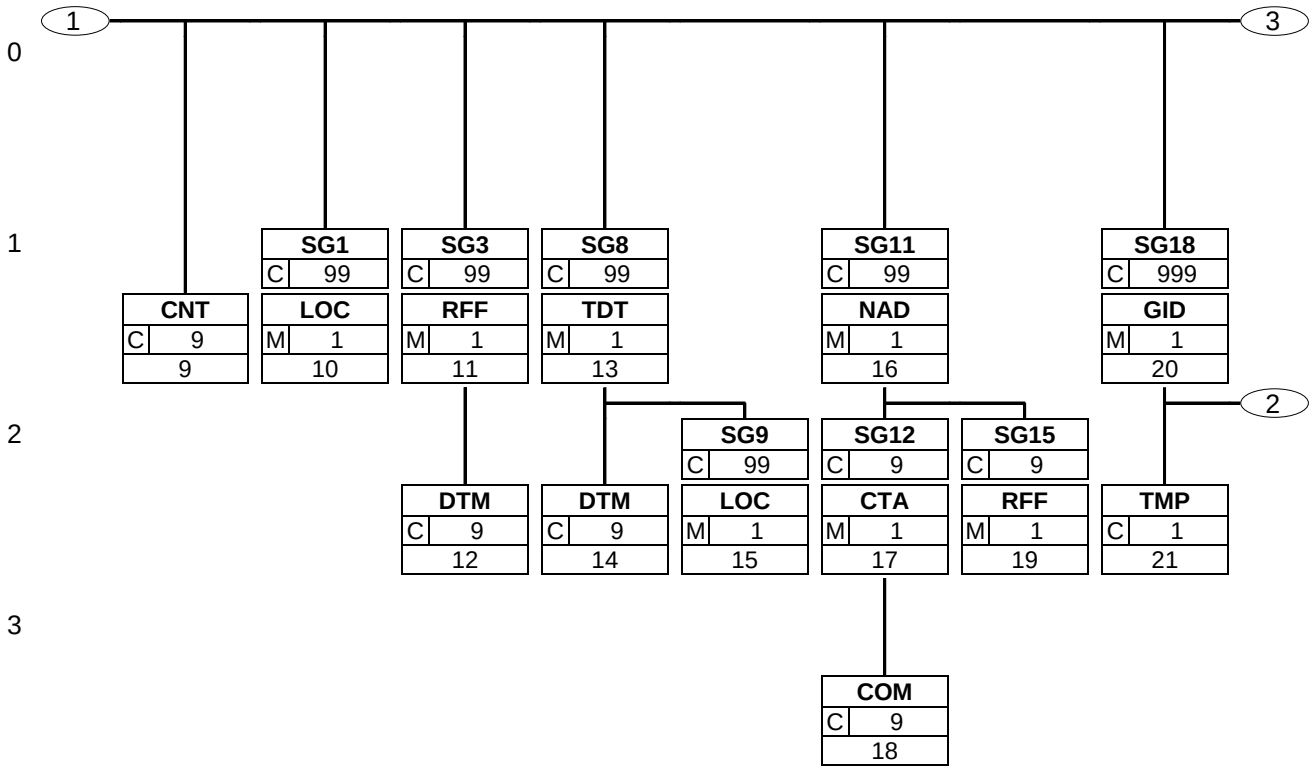

3. Branching Diagram

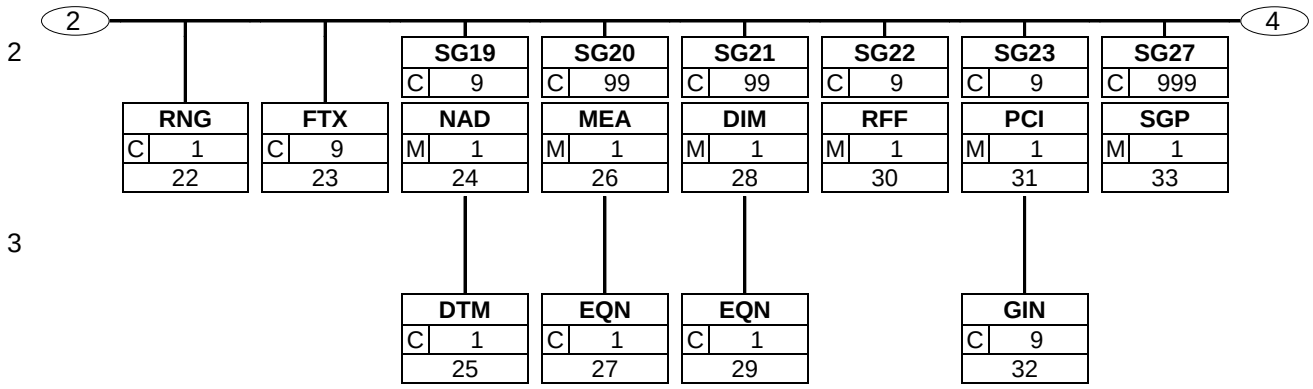

3. Branching Diagram

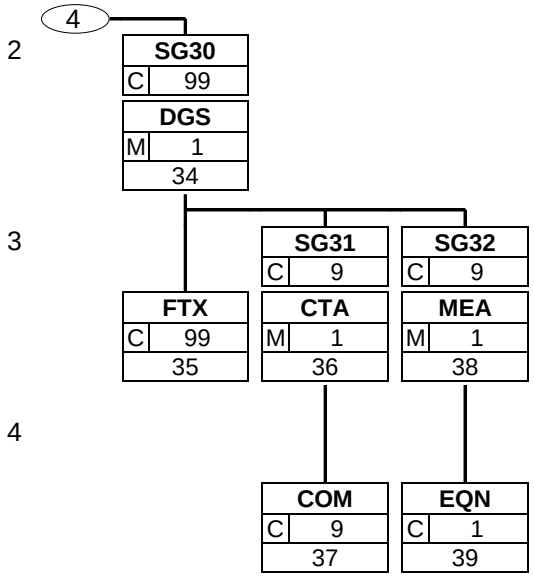

3. Branching Diagram

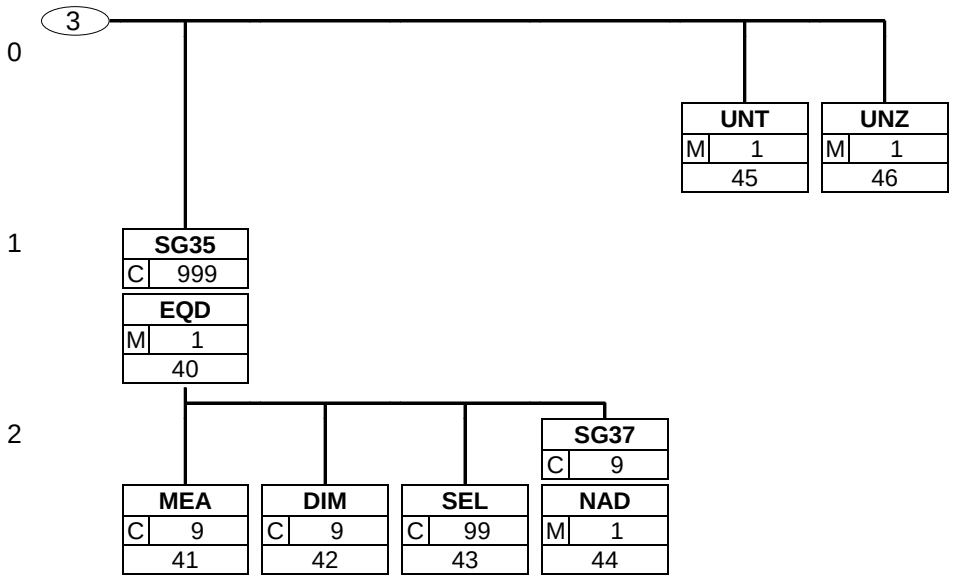

4. Segments Description

UNA - C 1 - Service string advice

This segment is used to inform the receiver of the interchange that a set of service string characters which are different to the default characters are being used.

UNB - M 1 - Interchange header

This segment is used to envelope the interchange, as well as to identify both, the party to whom the interchange is sent and the party who has sent the interchange. The principle of the UNB segment is the same as a physical envelope which covers one or more letters or documents, and which details, both the address where delivery is to take place and the address from where the envelope has come.

Arrival Notice Heading Section

UNH - M 1 - Message header

This segment is used to head, identify and specify a message.

BGM - M 1 - Beginning of message

This segment is used to indicate the type and function of a message and to transmit the identifying number.

DTM - C 9 - Date/time/period

This segment is used to specify any dates related to the arrival notice message.

TSR - C 9 - Transport service requirements

This segment is used to indicate the party responsible for the unloading of the goods from the transport means at the arrival location.

MOA - C 99 - Monetary amount

This segment is used to specify monetary values related to the arriving consignment.

FTX - C 99 - Free text

This segment is used to provide free form or coded text information related to the entire message.

CNT - C 9 - Control total

This segment is used to provide application data for message control purposes.

SG1 - C 99 - **LOC**

A group of segments to specify locations which apply to the entire message, e.g. place of transhipment.

LOC - M 1 - Place/location identification

This segment is used to identify any locations related to the complete arriving consignment.

SG3 - C 99 - **RFF-DTM**

A group of segments containing a reference and constants which apply to the entire message.

RFF - M 1 - Reference

This segment is used to specify references relating to the consignment arriving.

DTM - C 9 - Date/time/period

This segment is used to specify any dates related to the previous RFF segment.

SG8 - C 99 - **TDT-DTM-SG9**

A group of segments to indicate details of the movement of goods such as mode and means of transport, locations, departure, and arrival date(s) and time(s).

TDT - M 1 - Details of transport

This segment is used to indicate the main carriage transport means, and where necessary, the exact identification of the transport used for the arriving consignment.

4. Segments Description

DTM - C 9 - Date/time/period

This segment is used to specify any dates relating to the transport specified in the previous TDT segment.

SG9 - C 99 - **LOC**

A group of segments to specify a location related to this leg of transport.

LOC - M 1 - Place/location identification

This segment is used to identify any locations related to the transport details previously specified.

SG11 - C 99 - **NAD-SG12-SG15**

A group of segments to identify a party, related references and contacts for the complete message.

NAD - M 1 - Name and address

This segment is used to identify the parties involved in the arrival notice message. Identification of the consignor and/or consignee, and/or the carrier or forwarder is mandatory in the arrival notice message.

SG12 - C 9 - **CTA-COM**

A group of segments identifying a contact and its communications related to the party.

CTA - M 1 - Contact information

This segment is used to identify department and contact names within the company specified in the NAD segment.

COM - C 9 - Communication contact

This segment identifies the communications number and type of communications for the person or department identified in the preceding CTA segment.

SG15 - C 9 - **RFF**

A group of segments to specify a reference related to the party.

RFF - M 1 - Reference

This segment is used to identify any references related to the party identified in the NAD segment.

Arrival Notice Detail Section

SG18 - C 999 - **GID-TMP-RNG-FTX-SG19-SG20-SG21-SG22-SG23-SG27-SG30**

A group of segments to describe the goods items for which transport is undertaken.

GID - M 1 - Goods item details

This segment is the trigger segment for the detail section of the arrival notice message. It is used to specify the type of packaging for the goods item(s) which are contained in the arriving consignment.

TMP - C 1 - Temperature

This segment is used to specify transport temperature settings related to the current goods item.

RNG - C 1 - Range details

This segment is used to specify transport temperature ranges related to the goods item.

FTX - C 9 - Free text

This segment is used to provide free form or coded text information related to the entire message.

SG19 - C 9 - **NAD-DTM**

A group of segments to identify different places of collection and/or delivery for the goods item.

4. Segments Description

NAD - M 1 - Name and address

This segment is used to specify the place of delivery for the current goods item.

DTM - C 1 - Date/time/period

This DTM segment is used to specify dates and times relating to the delivery party specified in the preceding NAD segment.

SG20 - C 99 - **MEA-EQN**

A group of segments to specify measurements applicable to a goods item.

MEA - M 1 - Measurements

This segment is used to specify a measurement for the goods identified in the GID segment. All measurements given in the MEA segments relate to the highest level of packaging (the despatch units) identified in the GID segment.

EQN - C 1 - Number of units

This segment is used to specify the number of packages (despatch units) within the goods item to which the measurement applies.

SG21 - C 99 - **DIM-EQN**

A group of segments to specify dimensions applicable to a goods item.

DIM - M 1 - Dimensions

This segment is used to indicate the dimensions of the goods item identified in the GID segment. All dimensions given in the DIM segments relate to the highest level packaging (the despatch units) identified in the GID segment.

EQN - C 1 - Number of units

This segment is used to specify the number of packages (despatch units) within the goods items to which the dimensions apply.

SG22 - C 9 - **RFF**

A group of segments to identify references to a goods item.

RFF - M 1 - Reference

This segment is used to specify references which are applicable to the current goods item only. The references specified here override any specified in segment group 03 in the header.

SG23 - C 9 - **PCI-GIN**

A group of segments to specify marks and numbers of a goods item.

PCI - M 1 - Package identification

This segment is used to specify markings and labels on the goods item.

GIN - C 9 - Goods identity number

This segment is used to provide identification numbers marked on the packaging of the current goods item.

SG27 - C 999 - **SGP**

A group of segments to specify the distribution of a goods item among the transport equipment.

SGP - M 1 - Split goods placement

This segment is used to specify the placement of the goods item in the equipment used for the arriving consignment.

SG30 - C 99 - **DGS-FTX-SG31-SG32**

A group of segments to specify dangerous goods details related to the goods item. One goods item may be in different dangerous goods classes.

DGS - M 1 - Dangerous goods

This segment is used to indicate whether the goods item in the arriving consignment contains any dangerous goods.

4. Segments Description

FTX - C 99 - Free text

This segment is used to specify any additional information required for the dangerous goods.

SG31 - C 9 - **CTA-COM**

A group of segments to identify a contact to whom communication regarding the dangerous goods can be directed.

CTA - M 1 - Contact information

This segment is used to identify a contact name relating to the dangerous goods identified in the DGS segment.

COM - C 9 - Communication contact

This segment identifies the communications number and type of communications for the person or department identified in the preceding CTA segment.

SG32 - C 9 - **MEA-EQN**

A group of segments to identify dangerous goods measurements.

MEA - M 1 - Measurements

This segment is used to indicate measurements of the goods item which are dangerous.

EQN - C 1 - Number of units

This segment is used to indicate the number of units to which the dangerous goods measurements apply.

SG35 - C 999 - **EQD-MEA-DIM-SEL-SG37**

A group of segments to specify equipment in which goods are transported.

EQD - M 1 - Equipment details

This segment is used to indicate the units of equipment which have been used for the transport of the goods items in the arriving consignment.

MEA - C 9 - Measurements

This segment is used to specify the gross or tare weight of the equipment identified in the previous EQD segment.

DIM - C 9 - Dimensions

This segment is used to indicate the dimensions of the equipment identified in the EQD segment.

SEL - C 99 - Seal number

This segment is used to specify a seal number for the equipment identified in the EQD segment.

SG37 - C 9 - **NAD**

A group of segments to identify different equipment pick-up or drop-off places.

NAD - M 1 - Name and address

This segment is used to specify the equipment owner, pick up or drop off addresses for the equipment specified in the EQD segment.

Arrival Notice Summary Section

UNT - M 1 - Message trailer

This segment is used to end and check the completeness of a message.

UNZ - M 1 - Interchange trailer

This segment is used to provide the trailer of an interchange.

5. Segments Layout

This section describes each segment used in the EANCOM® Arrival notice message. The original EDIFACT segment layout is listed. The appropriate comments relevant to the EANCOM® subset are indicated.

Notes:

1. The segments are presented in the sequence in which they appear in the message. The segment or segment group tag is followed by the (M)andatory / (C)onditional indicator, the maximum number of occurrences and the segment description.

2. Reading from left to right, in column one, the data element tags and descriptions are shown, followed by in the second column the EDIFACT status (M or C), the field format, and the picture of the data elements. These first pieces of information constitute the original EDIFACT segment layout.

   Following the EDIFACT information, EANCOM® specific information is provided in the third, fourth, and fifth columns. In the third column a status indicator for the use of (C)onditional EDIFACT data elements (see 2.1 through 2.3 below), in the fourth column the restricted indicator (see point 3 on the following page), and in the fifth column notes and code values used for specific data elements in the message.

2.1 (M)andatory data elements in EDIFACT segments retain their status in EANCOM®.

2.2 Additionally, there are five types of status for data elements with a (C)onditional EDIFACT status, whether for simple, component or composite data elements. These are listed below and can be identified when relevant by the following abbreviations:

- REQUIRED	**R**	Indicates that the entity is required and must be sent.
- ADVISED	**A**	Indicates that the entity is advised or recommended.
- DEPENDENT	**D**	Indicates that the entity must be sent in certain conditions, as defined by the relevant explanatory note.
- OPTIONAL	**O**	Indicates that the entity is optional and may be sent at the discretion of the user.
- NOT USED	**N**	Indicates that the entity is not used and should be omitted.

2.3 If a composite is flagged as **N, NOT USED**, all data elements within that composite will have blank status indicators assigned to them.

3. Status indicators detailed in the fourth column which directly relate to the code values detailed in the fifth **column** may have two values:

- RESTRICTED	*****	A data element marked with an asterisk (*) in the fourth column indicates that the listed codes in column five are the only codes available for use with this data element, in this segment, in this message.
- OPEN		All data elements where coded representation of data is possible and a restricted set of code values is not indicated are open (no asterisk in fourth column). The available codes are listed in the EANCOM® Data Elements and Code Sets Directory. Code values may be given as examples or there may be a note on the format or type of code to be used.

4. Different colours are used for the code values in the segment details: restricted codes are in red and open codes in blue.

5. Segments Layout

Segment number: 1

UNA	- C	1 - Service string advice			
Function: The service string advice shall begin with the upper case characters UNA immediately followed by six characters in the order shown below. The space character shall not be used in positions 010, 020, 040, 050 or 060. The same character shall not be used in more than one position of the UNA.					
		EDIFACT	GS1	*	Description
UNA1	Component data element separator	M an1	**M**	*	Used as a separator between component data elements contained within a composite data element (default value: ":")
UNA2	Data element separator	M an1	**M**	*	Used to separate two simple or composite data elements (default value: "+")
UNA3	Decimal mark	M an1	**M**	*	Used to indicate the character used for decimal notation (default value:".")
UNA4	Release character	M an1	**M**	*	Used to restore any service character to its original specification (value: "?").
UNA5	Repetition separator	M an1	**M**	*	Used to indicate the character used for repetition separation (value: " * ").
UNA6	Segment terminator	M an1	**M**	*	Used to indicate the end of segment data (default value: " ' ")

Segment Notes:

This segment is used to inform the receiver of the interchange that a set of service string characters which are different to the default characters are being used.
When using the default set of service characters, the UNA segment need not be sent. If it is sent, it must immediately precede the UNB segment and contain the four service string characters (positions UNA1, UNA2, UNA4 and UNA6) selected by the interchange sender.
Regardless of whether or not all of the service string characters are being changed every data element within this segment must be filled, (i.e., if some default values are being used with user defined ones, both the default and user defined values must be specified).
When expressing the service string characters in the UNA segment, it is not necessary to include any element separators.
The use of the UNA segment is required when using a character set other than level A.
UNA:+.?*'

5. Segments Layout

Segment number: 2

UNB	- M	1 - Interchange header

Function:

To identify an interchange.

Notes:
1. S001/0002, shall be '4' to indicate this version of the syntax.
2. The combination of the values carried in data elements S002, S003 and 0020 shall be used to identify uniquely the interchange, for the purpose of acknowledgement.

		EDIFACT	GS1	*	Description
S001	SYNTAX IDENTIFIER	M	**M**		See Part I chapter 5.2.7 and segment notes.
0001	Syntax identifier	M a4	**M**	*	UNOA = UN/ECE level A UNOB = UN/ECE level B UNOC = UN/ECE level C UNOD = UN/ECE level D UNOE = UN/ECE level E UNOF = UN/ECE level F UNOG = UN/ECE level G UNOH = UN/ECE level H UNOI = UN/ECE level I UNOJ = UN/ECE level J UNOK = UN/ECE level K UNOW = UN/ECE level W UNOX = UN/ECE level X UNOY = UN/ECE level Y
0002	Syntax version number	M an1	**M**	*	4 = Version 4
0080	Service code list directory version number	C an..6	**N**		
0133	Character encoding, coded	C an..3	**N**		
S002	INTERCHANGE SENDER	M	**M**		
0004	Interchange sender identification	M an..35	**M**		GLN (n13)
0007	Identification code qualifier	C an..4	**R**	*	14 = GS1
0008	Interchange sender internal identification	C an..35	**O**		
0042	Interchange sender internal sub-identification	C an..35	**N**		
S003	INTERCHANGE RECIPIENT	M	**M**		
0010	Interchange recipient identification	M an..35	**M**		GLN (n13)
0007	Identification code qualifier	C an..4	**R**	*	14 = GS1
0014	Interchange recipient internal identification	C an..35	**O**		
0046	Interchange recipient internal sub-identification	C an..35	**N**		
S004	DATE AND TIME OF PREPARATION	M	**M**		
0017	Date	M n8	**M**		CCYYMMDD
0019	Time	M n4	**M**		HHMM
0020	Interchange control reference	M an..14	**M**		Unique reference identifying the interchange. Created

5. Segments Layout

Segment number: 2

		EDIFACT	GS1	*	Description
					by the interchange sender.
S005	RECIPIENT REFERENCE/ PASSWORD DETAILS	C	**O**		
0022	Recipient reference/password	M an..14	**M**		
0025	Recipient reference/password qualifier	C an2	**O**		
0026	Application reference	C an..14	**O**		Message identification if the interchange contains only one type of message.
0029	Processing priority code	C a1	**O**		A = Highest priority
0031	Acknowledgement request	C n1	**O**		1 = Requested
0032	Interchange agreement identifier	C an..35	**O**	*	EANCOM.....
0035	Test indicator	C n1	**O**		1 = Interchange is a test

Segment Notes:

This segment is used to envelope the interchange, as well as to identify both, the party to whom the interchange is sent and the party who has sent the interchange. The principle of the UNB segment is the same as a physical envelope which covers one or more letters or documents, and which details, both the address where delivery is to take place and the address from where the envelope has come.
S001: The character encoding specified in basic code table of ISO/IEC 646 (7-bit coded character set for information interchange) shall be used for the interchange service string advice (if used) and up to and including the composite data element S001 'Syntax identifier' in the interchange header. The character repertoire used for the characters in an interchange shall be identified from the code value of data element 0001 in S001 'Syntax identifier' in the interchange header. The character repertoire identified does not apply to objects and/or encrypted data.
The default encoding technique for a particular repertoire shall be the encoding technique defined by its associated character set specification.
DE 0001: The recommended (default) character set for use in EANCOM® for international exchanges is character set A (UNOA). Should users wish to use character sets other than A, an agreement on which set to use should be reached on a bilateral basis before communications begin.
DE 0004, 0008, 0010 and 0014: Within EANCOM® the use of the Global Location Number (GLN) is recommended for the identification of the interchange sender and recipient.
DE 0008: Identification (e.g. a division) specified by the sender of the interchange, to be included if agreed, by the recipient in response interchanges, to facilitate internal routing.
DE 0014: The address for routing, provided beforehand by the interchange recipient, is used by the interchange sender to inform the recipient of the internal address, within the latter's systems, to which the interchange should be routed. It is recommended that the GLN be used for this purpose.
DE 0007: Identification (e.g. a division) specified by the recipient of the interchange, to be included if agreed, by the sender in response interchanges, to facilitate internal routing.
DE S004: The date and time specified in this composite should be the date and time at which the interchange sender prepared the interchange. This date and time may not necessarily be the same as the date and time of contained messages.
DE 0020: The interchange control reference number is generated by the interchange sender and is used to identify uniquely each interchange. Should the interchange sender wish to re-use interchange control reference numbers, it is recommended that each number be preserved for at least a period of three months before being re-used. In order to guarantee uniqueness, the interchange control reference number should always be linked to the interchange sender's identification (DE 0004).
DE S005: The use of passwords must first be agreed bilaterally by the parties exchanging the interchange.
DE 0026: This data element is used to identify the application, on the interchange recipient's system, to which the interchange is directed. This data element may only be used if the interchange contains only one type of message, (e.g. only invoices). The reference used in this data element is assigned by the interchange sender.
DE 0031: This data element is used to indicate whether an acknowledgement to the interchange is required. The EANCOM® APERAK or CONTRL message should be used to provide acknowledgement of interchange receipt. In addition, the EANCOM® CONTRL message may be used to indicate when an interchange has been rejected

5. Segments Layout

Segment number: 2

due to syntax errors.
DE 0032: This data element is used to identify any underlying agreements which control the exchange of data. Within EANCOM® , the identity of such agreements must start with the letters 'EANCOM', the remaining characters within the data element being filled according to bilateral agreements.

UNB+UNOC:4+5412345678908:14+8798765432106:14+20020102:1000+12345555+++++EANCOMREF 52'

5. Segments Layout

Segment number: 3

UNH	- M	1 - Message header

Function:

To head, identify and specify a message.

Notes:
1. Data element S009/0057 is retained for upward compatibility. The use of S016 and/or S017 is encouraged in preference.
2. The combination of the values carried in data elements 0062 and S009 shall be used to identify uniquely the message within its group (if used) or if not used, within its interchange, for the purpose of acknowledgement.

		EDIFACT	GS1	*	Description
0062	Message reference number	M an..14	**M**		Senders unique message reference. Sequence number of the messages in the interchange. DE 0062 in the UNT will be identical. Sender generated.
S009	MESSAGE IDENTIFIER	M	**M**		
0065	Message type	M an..6	**M**	*	IFTMAN = Arrival notice message
0052	Message version number	M an..3	**M**	*	D = Draft version/UN/EDIFACT Directory
0054	Message release number	M an..3	**M**	*	01B = Release 2001 - B
0051	Controlling agency, coded	M an..3	**M**	*	UN = UN/CEFACT
0057	Association assigned code	C an..6	**R**	*	EAN003 = GS1 version control number (GS1 Permanent Code) Indicates that the message is the EANCOM version 003 of the UNSM Arrival Notice message.
0110	Code list directory version number	C an..6	**O**		This data element can be used to identify the codelist agreed by the interchange partners, e.g. EAN001 = EANCOM 2002 S4 codelist released on 01.12.2002 by GS1.
0113	Message type sub-function identification	C an..6	**N**		
0068	Common access reference	C an..35	**N**		
S010	STATUS OF THE TRANSFER	C	**N**		
0070	Sequence of transfers	M n..2			
0073	First and last transfer	C a1			
S016	MESSAGE SUBSET IDENTIFICATION	C	**N**		
0115	Message subset identification	M an..14			
0116	Message subset version number	C an..3			
0118	Message subset release number	C an..3			
0051	Controlling agency, coded	C an..3			
S017	MESSAGE IMPLEMENTATION GUIDELINE IDENTIFICATION	C	**N**		
0121	Message implementation guideline identification	M an..14			
0122	Message implementation guideline version number	C an..3			
0124	Message implementation	C an..3			

5. Segments Layout

Segment number: 3

		EDIFACT	GS1	*	Description
	guideline release number				
0051	Controlling agency, coded	C an..3			
S018	SCENARIO IDENTIFICATION	C	**N**		
0127	Scenario identification	M an..14			
0128	Scenario version number	C an..3			
0130	Scenario release number	C an..3			
0051	Controlling agency, coded	C an..3			

Segment Notes:

This segment is used to head, identify and specify a message.
DE's 0065, 0052, 0054, and 0051: Indicate that the message is a UNSM Arrival Notice message based on the D.01B directory under the control of the United Nations.

Example:
UNH+ME000001+IFTMAN:D:01B:UN:EAN003'

5. Segments Layout

Segment number: 4

BGM	- M	1 - Beginning of message			
Function: To indicate the type and function of a message and to transmit the identifying number.					
		EDIFACT	GS1	*	Description
C002	DOCUMENT/MESSAGE NAME	C	**R**		
1001	Document name code	C an..3	**R**	*	737 = Proof of delivery 781 = Arrival notice (goods)
1131	Code list identification code	C an..17	**N**		
3055	Code list responsible agency code	C an..3	**D**	*	9 = GS1 This data element is only used if the GS1 code value 78E is used in data element 1001.
1000	Document name	C an..35	**O**		
C106	DOCUMENT/MESSAGE IDENTIFICATION	C	**R**		
1004	Document identifier	C an..35	**R**		Arrival notice number assigned by the document sender. For global unique identification of documents Global Document Type Identifier (GDTI) is available.
1056	Version identifier	C an..9	**N**		
1060	Revision identifier	C an..6	**N**		
1225	Message function code	C an..3	**R**	*	5 = Replace 9 = Original 31 = Copy The message function, coded is a critical data element in this segment. It applies to all data indicated in the message. The following definitions apply for the restricted codes: 5 = Replace - Cancel the original arrival notice and replace with this arrival notice (original arrival notice reference is specified in RFF SG3). 9 = Original - An original transmission of a arrival notice. 31 = Copy - Copy of the arrival notice for a third party for information purposes.
4343	Response type code	C an..3	**N**		

Segment Notes:

This segment is used to indicate the type and function of a message and to transmit the identifying number.
All references other than the document number DE 1004 are to be put in the RFF segment.

Example:
BGM+781+52188+9'

5. Segments Layout

Segment number: 5

DTM	- C	9 - Date/time/period			
Function: To specify date, and/or time, or period.					
		EDIFACT	GS1	*	Description
C507	DATE/TIME/PERIOD	M	**M**		
2005	Date or time or period function code qualifier	M an..3	**M**	*	2 = Delivery date/time, requested 17 = Delivery date/time, estimated 58 = Clearance date (Customs) 137 = Document/message date/time 143 = Acceptance date/time of goods 151 = Importation date
2380	Date or time or period value	C an..35	**R**		
2379	Date or time or period format code	C an..3	**R**		102 = CCYYMMDD 203 = CCYYMMDDHHMM 718 = CCYYMMDD-CCYYMMDD

Segment Notes:

This segment is used to specify any dates related to the arrival notice message.
DE 2005: Identification of the 'Document/message date/time' (code value 137) is mandatory in an EANCOM message.

Example:
DTM+137:20021201:102'

5. Segments Layout

Segment number: 6

TSR	- C	9 - Transport service requirements			
Function: To specify the contract and carriage conditions and service and priority requirements for the transport.					
		EDIFACT	GS1	*	Description
C536	CONTRACT AND CARRIAGE CONDITION	C	**N**		
4065	Contract and carriage condition code	M an..3			
1131	Code list identification code	C an..17			
3055	Code list responsible agency code	C an..3			
C233	SERVICE	C	**O**		
7273	Service requirement code	M an..3	**M**		13 = Carrier unloads 15 = Consignee unloads
1131	Code list identification code	C an..17	**O**		
3055	Code list responsible agency code	C an..3	**D**		
7273	Service requirement code	C an..3	**O**		
1131	Code list identification code	C an..17	**O**		
3055	Code list responsible agency code	C an..3	**D**		
C537	TRANSPORT PRIORITY	C	**N**		
4219	Transport service priority code	M an..3			
1131	Code list identification code	C an..17			
3055	Code list responsible agency code	C an..3			
C703	NATURE OF CARGO	C	**N**		
7085	Cargo type classification code	M an..3			
1131	Code list identification code	C an..17			
3055	Code list responsible agency code	C an..3			

Segment Notes:

This segment is used to indicate the party responsible for the unloading of the goods from the transport means at the arrival location.

Example:
TSR++13'

5. Segments Layout

Segment number: 7

MOA	- C	99 - Monetary amount			
Function: To specify a monetary amount.					
		EDIFACT	GS1	*	Description
C516	MONETARY AMOUNT	M	**M**		
5025	Monetary amount type code qualifier	M an..3	**M**		22 = Cash on delivery amount 50 = Disbursements
5004	Monetary amount	C n..35	**R**		
6345	Currency identification code	C an..3	**O**		
6343	Currency type code qualifier	C an..3	**N**		
4405	Status description code	C an..3	**N**		

Segment Notes:

This segment is used to specify monetary values related to the arriving consignment.

Example:
MOA+22:100'

5. Segments Layout

Segment number: 8

FTX	- C	99 - Free text			
Function: To provide free form or coded text information.					
		EDIFACT	GS1	*	Description
4451	Text subject code qualifier	M an..3	**M**		AAI = General information BAL = Non-acceptance information BLR = Transport document remarks DAR = Damage remarks
4453	Free text function code	C an..3	**O**		1 = Text for subsequent use
C107	TEXT REFERENCE	C	**D**		This composite is only used when trading partners have agreed to use mutually defined code values.
4441	Free text value code	M an..17	**M**		
1131	Code list identification code	C an..17	**O**		
3055	Code list responsible agency code	C an..3	**D**		87 = Assigned by carrier 91 = Assigned by supplier or supplier's agent 92 = Assigned by buyer or buyer's agent
C108	TEXT LITERAL	C	**D**		This composite is only used if coded text can not be used.
4440	Free text value	M an..512	**M**		
4440	Free text value	C an..512	**O**		
4440	Free text value	C an..512	**O**		
4440	Free text value	C an..512	**O**		
4440	Free text value	C an..512	**O**		
3453	Language name code	C an..3	**D**		ISO 639 two alpha code This data element is only used when non coded free text has been provided in data element C108.
4447	Free text format code	C an..3	**N**		

Segment Notes:

This segment is used to provide free form or coded text information related to the entire message.
Use of this segment in free form is not recommended since it may inhibit automatic processing of the arrival notice message. Coded references to standard texts is an available functionality which enables automatic processing and reduces transmission overheads. Standard texts should be mutually defined between trading partners and can be used to cover legal or other requirements.

Example:
FTX+AAI+1+008::87'
e.g. Standard text code 008 = 'Goods arriving require additional handling services.'

5. Segments Layout

Segment number: 9

CNT - C 9 - Control total					
Function: To provide control total.					
		EDIFACT	GS1	*	Description
C270	CONTROL	M	**M**		
6069	Control total type code qualifier	M an..3	**M**		7 = Total gross weight 11 = Total number of packages 15 = Total consignment, cube 16 = Total number of equipment
6066	Control total value	M n..18	**M**		
6411	Measurement unit code	C an..3	**O**		

Segment Notes:

This segment is used to provide application data for message control purposes.

Example:
CNT+11:450'
When using code value '11' the total specified in data element 6066 is arrived at by adding the values specified only in the first occurance of C213, data element 7224, of the GID segment.

5. Segments Layout

Segment number: 10

SG1	- C	99 -	LOC
LOC	- M	1 -	Place/location identification

Function:

To identify a place or a location and/or related locations.

		EDIFACT	GS1	*	Description
3227	Location function code qualifier	M an..3	**M**		7 = Place of delivery 10 = Place of acceptance 57 = Place of payment
C517	LOCATION IDENTIFICATION	C	**A**		
3225	Location name code	C an..25	**A**		GLN - Format n13
1131	Code list identification code	C an..17	**O**		
3055	Code list responsible agency code	C an..3	**D**		9 = GS1 DE 3055 must be used if DE 3225 is used and does not contain an UN/LOCODE.
3224	Location name	C an..256	**O**		
C519	RELATED LOCATION ONE IDENTIFICATION	C	**N**		
3223	First related location name code	C an..25			
1131	Code list identification code	C an..17			
3055	Code list responsible agency code	C an..3			
3222	First related location name	C an..70			
C553	RELATED LOCATION TWO IDENTIFICATION	C	**N**		
3233	Second related location name code	C an..25			
1131	Code list identification code	C an..17			
3055	Code list responsible agency code	C an..3			
3232	Second related location name	C an..70			
5479	Relation code	C an..3	**N**		

Segment Notes:

This segment is used to identify any locations related to the complete arriving consignment.

Example:
LOC+10+5412345678908::9'

5. Segments Layout

Segment number: 11

SG3	- C	99 -	RFF-DTM
RFF	- M	1 -	Reference

Function:

To specify a reference.

		EDIFACT	GS1	*	Description
C506	REFERENCE	M	**M**		
1153	Reference code qualifier	M an..3	**M**		AAS = Transport document number ASI = Proof of delivery reference number CT = Contract number CU = Consignor's reference number ON = Order number (buyer) UCN = Unique consignment reference number The code ASI is a code allocated by the recipient of the goods to confirm to the carrier/consignor successful receipt. This code should only be used when the message is being used for proof of delivery purposes.
1154	Reference identifier	C an..70	**R**		
1156	Document line identifier	C an..6	**N**		
4000	Reference version identifier	C an..35	**N**		
1060	Revision identifier	C an..6	**N**		

Segment Notes:

This segment is used to specify references relating to the consignment arriving.

Example:
RFF+CT:76214'

5. Segments Layout

Segment number: 12

SG3	- C	99	-	RFF-DTM
DTM	- C	9	-	Date/time/period

Function:

To specify date, and/or time, or period.

		EDIFACT	GS1	*	Description
C507	DATE/TIME/PERIOD	M	**M**		
2005	Date or time or period function code qualifier	M an..3	**M**	*	171 = Reference date/time
2380	Date or time or period value	C an..35	**R**		
2379	Date or time or period format code	C an..3	**R**		102 = CCYYMMDD 203 = CCYYMMDDHHMM

Segment Notes:

This segment is used to specify any dates related to the previous RFF segment.

Example:
DTM+171:20021125:102'

5. Segments Layout

Segment number: 13

SG8	- C	99 -	TDT-DTM-SG9
TDT	- M	1 -	Details of transport

Function:

To specify the transport details such as mode of transport, means of transport, its conveyance reference number and the identification of the means of transport.
The segment may be pointed to by the TPL segment.

		EDIFACT	GS1	*	Description
8051	Transport stage code qualifier	M an..3	**M**	*	20 = Main-carriage transport
8028	Means of transport journey identifier	C an..17	**O**		Reference number covering the transport.
C220	MODE OF TRANSPORT	C	**A**		
8067	Transport mode name code	C an..3	**O**		
8066	Transport mode name	C an..17	**N**		
C228	TRANSPORT MEANS	C	**O**		Data Elements 8179 and 8178 are only used when the type of transport must be specifically identified, that is, a generic description such as road transport is unsuitable.
8179	Transport means description code	C an..8	**D**		23 = Rail bulk car 31 = Truck
8178	Transport means description	C an..17	**D**		
C040	CARRIER	C	**O**		
3127	Carrier identifier	C an..17	**A**		GLN - Format n13
1131	Code list identification code	C an..17	**O**		
3055	Code list responsible agency code	C an..3	**D**		9 = GS1
3128	Carrier name	C an..35	**O**		
8101	Transit direction indicator code	C an..3	**N**		
C401	EXCESS TRANSPORTATION INFORMATION	C	**N**		
8457	Excess transportation reason code	M an..3			
8459	Excess transportation responsibility code	M an..3			
7130	Customer shipment authorisation identifier	C an..17			
C222	TRANSPORT IDENTIFICATION	C	**O**		
8213	Transport means identification name identifier	C an..9	**O**		
1131	Code list identification code	C an..17	**O**		
3055	Code list responsible agency code	C an..3	**D**		DE 3055 must be used if DE 8213 is used.
8212	Transport means identification name	C an..35	**R**		Vehicle license plate/Aircraft number.
8453	Transport means nationality code	C an..3	**O**		ISO 3166 two alpha code
	Transport means ownership		**N**		

5. Segments Layout

Segment number: 13

	EDIFACT	GS1	*	Description
8281 indicator code	C an..3			

Segment Notes:

This segment is used to indicate the main carriage transport means, and where necessary, the exact identification of the transport used for the arriving consignment.

Example:
TDT+20++30+31'

5. Segments Layout

Segment number: 14

SG8	- C	99	-	TDT-DTM-SG9
DTM	- C	9	-	Date/time/period

Function:

To specify date, and/or time, or period.

		EDIFACT	GS1	*	Description
C507	DATE/TIME/PERIOD	M	**M**		
2005	Date or time or period function code qualifier	M an..3	**M**	*	132 = Arrival date/time, estimated 186 = Departure date/time, actual
2380	Date or time or period value	C an..35	**R**		
2379	Date or time or period format code	C an..3	**R**		102 = CCYYMMDD 203 = CCYYMMDDHHMM 718 = CCYYMMDD-CCYYMMDD

Segment Notes:

This segment is used to specify any dates relating to the transport specified in the previous TDT segment.

Example:
DTM+132:200212151000:203'

5. Segments Layout

Segment number: 15

SG8	- C	99 -	TDT-DTM-SG9
SG9	- C	99 -	LOC
LOC	- M	1 -	Place/location identification

Function:

To identify a place or a location and/or related locations.

		EDIFACT	GS1	*	Description
3227	Location function code qualifier	M an..3	**M**		5 = Place of departure 8 = Place of destination 9 = Place/port of loading 11 = Place/port of discharge
C517	LOCATION IDENTIFICATION	C	**A**		
3225	Location name code	C an..25	**A**		GLN - Format n13
1131	Code list identification code	C an..17	**O**		
3055	Code list responsible agency code	C an..3	**D**		9 = GS1 DE 3055 must be used if DE 3225 is used and does not contain an UN/LOCODE.
3224	Location name	C an..256	**O**		
C519	RELATED LOCATION ONE IDENTIFICATION	C	**N**		
3223	First related location name code	C an..25			
1131	Code list identification code	C an..17			
3055	Code list responsible agency code	C an..3			
3222	First related location name	C an..70			
C553	RELATED LOCATION TWO IDENTIFICATION	C	**N**		
3233	Second related location name code	C an..25			
1131	Code list identification code	C an..17			
3055	Code list responsible agency code	C an..3			
3232	Second related location name	C an..70			
5479	Relation code	C an..3	**N**		

Segment Notes:

This segment is used to identify any locations related to the transport details previously specified.

Example:
LOC+5+5412345678908::9'

5. Segments Layout

Segment number: 16

SG11	- C	99 -	NAD-SG12-SG15
NAD	- M	1 -	Name and address

Function:

To specify the name/address and their related function, either by C082 only and/or unstructured by C058 or structured by C080 thru 3207.

		EDIFACT	GS1	*	Description
3035	Party function code qualifier	M an..3	**M**		CA = Carrier CN = Consignee CZ = Consignor DP = Delivery party FP = Freight/charges payer FW = Freight forwarder NI = Notify party
C082	PARTY IDENTIFICATION DETAILS	C	**A**		
3039	Party identifier	M an..35	**M**		For identification of parties it is recommended to use GLN - Format n13.
1131	Code list identification code	C an..17	**N**		
3055	Code list responsible agency code	C an..3	**R**	*	9 = GS1
C058	NAME AND ADDRESS	C	**O**		This composite may only be used to fulfill the requirements of directive 2003/58/EC, article 4.
3124	Name and address description	M an..35	**M**		
3124	Name and address description	C an..35	**O**		
3124	Name and address description	C an..35	**O**		
3124	Name and address description	C an..35	**O**		
3124	Name and address description	C an..35	**O**		
C080	PARTY NAME	C	**D**		
3036	Party name	M an..35	**M**		Party Name in clear text.
3036	Party name	C an..35	**O**		
3036	Party name	C an..35	**O**		
3036	Party name	C an..35	**O**		
3036	Party name	C an..35	**O**		
3045	Party name format code	C an..3	**O**		
C059	STREET	C	**D**		
3042	Street and number or post office box identifier	M an..35	**M**		Building Name/Number and Street
3042	Street and number or post office box identifier	C an..35	**O**		Name and/or P.O. Box
3042	Street and number or post office box identifier	C an..35	**O**		
3042	Street and number or post office box identifier	C an..35	**O**		
3164	City name	C an..35	**D**		City/Town, clear text.
C819	COUNTRY SUB-ENTITY DETAILS	C	**D**		

5. Segments Layout

Segment number: 16

		EDIFACT	GS1	*	Description
3229	Country sub-entity name code	C an..9	**O**		
1131	Code list identification code	C an..17	**O**		
3055	Code list responsible agency code	C an..3	**O**		
3228	Country sub-entity name	C an..70	**O**		County/State, clear text.
3251	Postal identification code	C an..17	**D**		Postal Code
3207	Country name code	C an..3	**D**		ISO 3166 two alpha code

Segment Notes:

This segment is used to identify the parties involved in the arrival notice message. Identification of the consignor and/or consignee, and/or the carrier or forwarder is mandatory in the arrival notice message.

Example:
NAD+CZ+5411234512309::9'
NAD+FW+5412345123453::9'

Dependency Notes:
The following composites and data elements are only used when a coded name and address can not be used.
The affected composites and data elements are as follows:
C080 - C059 - 3164 - C819 - 3251 - 3207

5. Segments Layout

Segment number: 17

SG11	- C	99 -	NAD-SG12-SG15
SG12	- C	9 -	CTA-COM
CTA	- M	1 -	Contact information

Function:

To identify a person or a department to whom communication should be directed.

		EDIFACT	GS1	*	Description
3139	Contact function code	C an..3	**R**		IC = Information contact
C056	DEPARTMENT OR EMPLOYEE DETAILS	C	**O**		
3413	Department or employee name code	C an..17	**O**		
3412	Department or employee name	C an..35	**O**		

Segment Notes:

This segment is used to identify department and contact names within the company specified in the NAD segment.

Example:
CTA+IC+:R PAX'

5. Segments Layout

Segment number: 18

SG11	- C	99	-	NAD-SG12-SG15
SG12	- C	9	-	CTA-COM
COM	- C	9	-	Communication contact

Function:

To identify a communication number of a department or a person to whom communication should be directed.

		EDIFACT	GS1	*	Description
C076	COMMUNICATION CONTACT	M	**M**		
3148	Communication address identifier	M an..512	**M**		
3155	Communication address code qualifier	M an..3	**M**		AO = Uniform Resource Location (URL) EM = Electronic mail TE = Telephone

Segment Notes:

This segment identifies the communications number and type of communications for the person or department identified in the preceding CTA segment.

Example:
COM+0033148759632:FX'

5. Segments Layout

Segment number: 19

SG11	- C	99 -	NAD-SG12-SG15
SG15	- C	9 -	RFF
RFF	- M	1 -	Reference

Function:

To specify a reference.

		EDIFACT	GS1	*	Description
C506	REFERENCE	M	**M**		
1153	Reference code qualifier	M an..3	**M**	*	GN = Government reference number VA = VAT registration number XA = Company/place registration number YC1 = Additional party identification (GS1 Temporary Code)
1154	Reference identifier	C an..70	**R**		
1156	Document line identifier	C an..6	**N**		
4000	Reference version identifier	C an..35	**N**		
1060	Revision identifier	C an..6	**N**		

Segment Notes:

This segment is used to identify any references related to the party identified in the NAD segment.

Example:
RFF+YC1:6532'

5. Segments Layout

Segment number: 20

SG18	- C	999 -	GID-TMP-RNG-FTX-SG19-SG20-SG21-SG22-SG23-SG27-SG30
GID	- M	1 -	Goods item details

Function:
To indicate totals of a goods item.

		EDIFACT	GS1	*	Description
1496	Goods item number	C n..5	**R**		Application generated number of the item lines within the arrival notice.
C213	NUMBER AND TYPE OF PACKAGES	C	**R**		
7224	Package quantity	C n..8	**R**		
7065	Package type description code	C an..17	**O**		09 = Returnable pallet (GS1 Temporary Code) 201 = Pallet ISO 1 - 1/1 EURO Pallet (GS1 Temporary Code)
1131	Code list identification code	C an..17	**N**		
3055	Code list responsible agency code	C an..3	**D**	*	9 = GS1
7064	Type of packages	C an..35	**N**		
7233	Packaging related description code	C an..3	**N**		
C213	NUMBER AND TYPE OF PACKAGES	C	**O**		
7224	Package quantity	C n..8	**R**		
7065	Package type description code	C an..17	**O**		09 = Returnable pallet (GS1 Temporary Code) 201 = Pallet ISO 1 - 1/1 EURO Pallet (GS1 Temporary Code)
1131	Code list identification code	C an..17	**N**		
3055	Code list responsible agency code	C an..3	**D**	*	9 = GS1
7064	Type of packages	C an..35	**N**		
7233	Packaging related description code	C an..3	**N**		
C213	NUMBER AND TYPE OF PACKAGES	C	**O**		
7224	Package quantity	C n..8	**R**		
7065	Package type description code	C an..17	**O**		09 = Returnable pallet (GS1 Temporary Code) 201 = Pallet ISO 1 - 1/1 EURO Pallet (GS1 Temporary Code)
1131	Code list identification code	C an..17	**N**		
3055	Code list responsible agency code	C an..3	**D**	*	9 = GS1
7064	Type of packages	C an..35	**N**		
7233	Packaging related description code	C an..3	**N**		
C213	NUMBER AND TYPE OF	C	**O**		

5. Segments Layout

Segment number: 20

		EDIFACT	GS1	*	Description
	PACKAGES				
7224	Package quantity	C n..8	**R**		
7065	Package type description code	C an..17	**O**		09 = Returnable pallet (GS1 Temporary Code) 201 = Pallet ISO 1 - 1/1 EURO Pallet (GS1 Temporary Code)
1131	Code list identification code	C an..17	**N**		
3055	Code list responsible agency code	C an..3	**D**	*	9 = GS1
7064	Type of packages	C an..35	**N**		
7233	Packaging related description code	C an..3	**N**		
C213	NUMBER AND TYPE OF PACKAGES	C	**O**		
7224	Package quantity	C n..8	**R**		
7065	Package type description code	C an..17	**O**		09 = Returnable pallet (GS1 Temporary Code) 201 = Pallet ISO 1 - 1/1 EURO Pallet (GS1 Temporary Code)
1131	Code list identification code	C an..17	**N**		
3055	Code list responsible agency code	C an..3	**D**	*	9 = GS1
7064	Type of packages	C an..35	**N**		
7233	Packaging related description code	C an..3	**N**		

Segment Notes:

This segment is the trigger segment for the detail section of the arrival notice message. It is used to specify the type of packaging for the goods item(s) which are contained in the arriving consignment.
Within the GID segment it is possible to identify up to 3 levels of packaging hierarchy for the transport goods item. The top level (first occurence of C213) identifies the despatch unit.

Example:
GID+1+1:09::9+6:CT'
(The top level is 1 returnable pallet with a second level containing 6 cartons.)

Dependency notes:
DE 3055: This data element is only used with the code value '9' if the Type of Packages identified in data element 7065 is an GS1 code.

5. Segments Layout

Segment number: 21

SG18	- C	999 -	GID-TMP-RNG-FTX-SG19-SG20-SG21-SG22-SG23-SG27-SG30
TMP	- C	1 -	Temperature

Function:

To specify the temperature setting.

		EDIFACT	GS1	*	Description
6245	Temperature type code qualifier	M an..3	**M**	*	2 = Transport temperature
C239	TEMPERATURE SETTING	C	**R**		
6246	Temperature value	C n..15	**O**		
6411	Measurement unit code	C an..3	**O**		

Segment Notes:

This segment is used to specify transport temperature settings related to the current goods item.

Example:
TMP+2+40:CEL'

5. Segments Layout

Segment number: 22

SG18	- C	999 -	GID-TMP-RNG-FTX-SG19-SG20-SG21-SG22-SG23-SG27-SG30
RNG	- C	1 -	Range details

Function:

To identify a range.

		EDIFACT	GS1	*	Description
6167	Range type code qualifier	M an..3	**M**	*	5 = Temperature range
C280	RANGE	C	**R**		
6411	Measurement unit code	M an..3	**M**		CEL = degree celsius FAH = degree Fahrenheit KEL = kelvin
6162	Range minimum value	C n..18	**O**		
6152	Range maximum value	C n..18	**O**		

Segment Notes:

This segment is used to specify transport temperature ranges related to the goods item.

Example:
RNG+5+CEL:4:10'

5. Segments Layout

Segment number: 23

SG18	- C	999 -	GID-TMP-RNG-FTX-SG19-SG20-SG21-SG22-SG23-SG27-SG30
FTX	- C	9 -	Free text

Function:

To provide free form or coded text information.

		EDIFACT	GS1	*	Description
4451	Text subject code qualifier	M an..3	**M**		AAA = Goods description BAK = Missing goods remarks BAL = Non-acceptance information DAR = Damage remarks
4453	Free text function code	C an..3	**O**		1 = Text for subsequent use
C107	TEXT REFERENCE	C	**D**		This composite is only used when trading partners have agreed to use mutually defined code values.
4441	Free text value code	M an..17	**M**		
1131	Code list identification code	C an..17	**O**		
3055	Code list responsible agency code	C an..3	**D**		87 = Assigned by carrier 91 = Assigned by supplier or supplier's agent 92 = Assigned by buyer or buyer's agent
C108	TEXT LITERAL	C	**D**		This composite is only used if coded text can not be used.
4440	Free text value	M an..512	**M**		
4440	Free text value	C an..512	**O**		
4440	Free text value	C an..512	**O**		
4440	Free text value	C an..512	**O**		
4440	Free text value	C an..512	**O**		
3453	Language name code	C an..3	**D**		ISO 639 two alpha code This data element is only used when non coded free text has been provided in data element C108.
4447	Free text format code	C an..3	**N**		

Segment Notes:

This segment is used to provide free form or coded text information related to the entire message.
Use of this segment in free form is not recommended since it may inhibit automatic processing of the arrival notice message. Coded references to standard texts is an available functionality which enables automatic processing and reduces transmission overheads. Standard texts should be mutually defined between trading partners and can be used to cover legal or other requirements.

Example:
FTX+DAR+1+012::87'
(Code value 012 = Goods item damaged by carrier during un-loading at destination.)

5. Segments Layout

Segment number: 24

SG18	- C	999 -	GID-TMP-RNG-FTX-SG19-SG20-SG21-SG22-SG23-SG27-SG30
SG19	- C	9 -	NAD-DTM
NAD	- M	1 -	Name and address

Function:

To specify the name/address and their related function, either by C082 only and/or unstructured by C058 or structured by C080 thru 3207.

		EDIFACT	GS1	*	Description
3035	Party function code qualifier	M an..3	**M**	*	DP = Delivery party
C082	PARTY IDENTIFICATION DETAILS	C	**A**		
3039	Party identifier	M an..35	**M**		For identification of parties it is recommended to use GLN - Format n13.
1131	Code list identification code	C an..17	**N**		
3055	Code list responsible agency code	C an..3	**R**	*	9 = GS1
C058	NAME AND ADDRESS	C	**O**		This composite may only be used to fulfill the requirements of directive 2003/58/EC, article 4.
3124	Name and address description	M an..35	**M**		
3124	Name and address description	C an..35	**O**		
3124	Name and address description	C an..35	**O**		
3124	Name and address description	C an..35	**O**		
3124	Name and address description	C an..35	**O**		
C080	PARTY NAME	C	**D**		
3036	Party name	M an..35	**M**		Party Name in clear text.
3036	Party name	C an..35	**O**		
3036	Party name	C an..35	**O**		
3036	Party name	C an..35	**O**		
3036	Party name	C an..35	**O**		
3045	Party name format code	C an..3	**O**		
C059	STREET	C	**D**		
3042	Street and number or post office box identifier	M an..35	**M**		Building Name/Number and Street
3042	Street and number or post office box identifier	C an..35	**O**		Name and/or P.O. Box
3042	Street and number or post office box identifier	C an..35	**O**		
3042	Street and number or post office box identifier	C an..35	**O**		
3164	City name	C an..35	**D**		City/Town, clear text.
C819	COUNTRY SUB-ENTITY DETAILS	C	**D**		
3229	Country sub-entity name code	C an..9	**O**		
1131	Code list identification code	C an..17	**O**		
3055	Code list responsible agency	C an..3	**O**		

5. Segments Layout

Segment number: 24

		EDIFACT	GS1	*	Description
	code				
3228	Country sub-entity name	C an..70	**O**		County/State, clear text.
3251	Postal identification code	C an..17	**D**		Postal Code
3207	Country name code	C an..3	**D**		ISO 3166 two alpha code

Segment Notes:

This segment is used to specify the place of delivery for the current goods item.
Only one occurrence of this segment is allowed per arriving goods item.

Example:
NAD+DP+5412345123453::9'

Dependency Notes:
The following composites and data elements are only used when a coded name and address can not be used.
The affected composites and data elements are as follows:
C080 - C059 - 3164 - C819 - 3251 - 3207

5. Segments Layout

Segment number: 25

SG18	- C	999 -	GID-TMP-RNG-FTX-SG19-SG20-SG21-SG22-SG23-SG27-SG30
SG19	- C	9 -	NAD-DTM
DTM	- C	1 -	Date/time/period

Function:

To specify date, and/or time, or period.

		EDIFACT	GS1	*	Description
C507	DATE/TIME/PERIOD	M	**M**		
2005	Date or time or period function code qualifier	M an..3	**M**	*	2 = Delivery date/time, requested 17 = Delivery date/time, estimated 58 = Clearance date (Customs) 151 = Importation date
2380	Date or time or period value	C an..35	**R**		
2379	Date or time or period format code	C an..3	**R**		102 = CCYYMMDD 203 = CCYYMMDDHHMM

Segment Notes:

This DTM segment is used to specify dates and times relating to the delivery party specified in the preceding NAD segment.

Example:
DTM+17:20021220:102'

5. Segments Layout

Segment number: 26

SG18	- C	999	-	GID-TMP-RNG-FTX-SG19-SG20-SG21-SG22-SG23-SG27-SG30
SG20	- C	99	-	MEA-EQN
MEA	- M	1	-	Measurements

Function:

To specify physical measurements, including dimension tolerances, weights and counts.

		EDIFACT	GS1	*	Description
6311	Measurement purpose code qualifier	M an..3	**M**		AAE = Measurement AAI = Item weight LMT = Loading metre
C502	MEASUREMENT DETAILS	C	**A**		
6313	Measured attribute code	C an..3	**A**		AAB = Unit gross weight AAW = Gross volume G = Gross weight AFF = Gross measure cube PMC = Package net measurement cube (GS1 Temporary Code) T = Tare weight This qualifier determines the measurement value to be applied either to one single despatch unit of the goods item or to a number of despatch units of the goods item. When Unit Gross Weight is provided in this segment the measurement provided relates to the total gross weight of one single despatch unit in the goods item. The number of despatch units of the goods item that all have the same quoted gross weight is specified in the EQN segment when different from the number of despatch units specified in the GID segment. When Gross Weight is provided the measurement relates to the total gross weight of a number of despatch units in the goods item. The number of despatch units of the goods item that together have the quoted gross weight is specified in the EQN segment when different to the number of despatch units specified in the GID segment.
6321	Measurement significance code	C an..3	**O**		3 = Approximately 4 = Equal to
6155	Non-discrete measurement name code	C an..17	**N**		
6154	Non-discrete measurement name	C an..70	**N**		
C174	VALUE/RANGE	C	**R**		
6411	Measurement unit code	M an..3	**M**		KGM = kilogram LTR = litre MTR = metre MTQ = cubic metre TNE = tonne (metric ton)
6314	Measurement value	C an..18	**O**		
6162	Range minimum value	C n..18	**O**		
6152	Range maximum value	C n..18	**O**		
6432	Significant digits quantity	C n..2	**N**		
			N		

5. Segments Layout

Segment number: 26

	EDIFACT	GS1	*	Description
7383 Surface or layer code	C an..3			

Segment Notes:

This segment is used to specify a measurement for the goods identified in the GID segment. All measurements given in the MEA segments relate to the highest level of packaging (the despatch units) identified in the GID segment.

Example:
MEA+AAI+G+KGM:1600'

5. Segments Layout

Segment number: 27

SG18	- C	999	-	GID-TMP-RNG-FTX-SG19-SG20-SG21-SG22-SG23-SG27-SG30
SG20	- C	99	-	MEA-EQN
EQN	- C	1	-	Number of units

Function:

To specify the number of units.

		EDIFACT	GS1	*	Description
C523	NUMBER OF UNIT DETAILS	M	**M**		
6350	Units quantity	C n..15	**R**		
6353	Unit type code qualifier	C an..3	**N**		

Segment Notes:

This segment is used to specify the number of packages (despatch units) within the goods item to which the measurement applies.

Example:
EQN+1'

5. Segments Layout

Segment number: 28

SG18	- C	999 -	GID-TMP-RNG-FTX-SG19-SG20-SG21-SG22-SG23-SG27-SG30
SG21	- C	99 -	DIM-EQN
DIM	- M	1 -	Dimensions

Function:

To specify dimensions.

		EDIFACT	GS1	*	Description
6145	Dimension type code qualifier	M an..3	**M**	*	1 = Gross dimensions 10E = Unit gross dimensions (GS1 Temporary Code) This qualifier determines the dimension values to be applied either to one single despatch unit of the goods item or to a number of despatch units of the goods item. When Unit Gross Dimensions are provided in this segment the dimension values provided relate to the total gross dimensions of one single despatch unit in the goods item. The number of despatch units of the goods item that all have the same quoted gross dimensions is specified in the EQN segment when different from the number of despatch units specified in the GID segment. When Gross Dimensions are provided the dimension values relate to the total gross weight of a number of despatch units in the goods item. The number of despatch units of the goods item that together have the quoted gross dimension is specified in the EQN segment when different to the number of despatch units specified in the GID segment.
C211	DIMENSIONS	M	**M**		
6411	Measurement unit code	M an..3	**M**		MTR = metre
6168	Length dimension value	C n..15	**O**		
6140	Width dimension value	C n..15	**O**		
6008	Height dimension value	C n..15	**O**		

Segment Notes:

This segment is used to indicate the dimensions of the goods item identified in the GID segment. All dimensions given in the DIM segments relate to the highest level packaging (the despatch units) identified in the GID segment.

Example:
DIM+1+MTR:4:2:2'

5. Segments Layout

Segment number: 29

SG18	- C	999	-	GID-TMP-RNG-FTX-SG19-SG20-SG21-SG22-SG23-SG27-SG30
SG21	- C	99	-	DIM-EQN
EQN	- C	1	-	Number of units

Function:

To specify the number of units.

		EDIFACT	GS1	*	Description
C523	NUMBER OF UNIT DETAILS	M	**M**		
6350	Units quantity	C n..15	**R**		The value expressed in this data element must be the sum of all the values of DE 7224 in the first occurance of C213 in the GID segment throughout the message.
6353	Unit type code qualifier	C an..3	**N**		

Segment Notes:

This segment is used to specify the number of packages (despatch units) within the goods items to which the dimensions apply.

Example:
EQN+22'

5. Segments Layout

Segment number: 30

SG18	- C	999 -	GID-TMP-RNG-FTX-SG19-SG20-SG21-SG22-SG23-SG27-SG30
SG22	- C	9 -	RFF
RFF	- M	1 -	Reference

Function:

To specify a reference.

		EDIFACT	GS1	*	Description
C506	REFERENCE	M	**M**		
1153	Reference code qualifier	M an..3	**M**		CT = Contract number ON = Order number (buyer)
1154	Reference identifier	C an..70	**R**		
1156	Document line identifier	C an..6	**O**		
4000	Reference version identifier	C an..35	**N**		
1060	Revision identifier	C an..6	**N**		

Segment Notes:

This segment is used to specify references which are applicable to the current goods item only. The references specified here override any specified in segment group 03 in the header.

Example:
RFF+CT:52441'

5. Segments Layout

Segment number: 31

SG18	- C	999 -	GID-TMP-RNG-FTX-SG19-SG20-SG21-SG22-SG23-SG27-SG30
SG23	- C	9 -	PCI-GIN
PCI	- M	1 -	Package identification

Function:

To specify markings and labels on individual packages or physical units.

		EDIFACT	GS1	*	Description
4233	Marking instructions code	C an..3	**R**		16 = Buyer's instructions 17 = Supplier's instructions 18 = Carrier's instructions 39 = Marked with Serial Shipping Container Code (SSCC)
C210	MARKS & LABELS	C	**O**		
7102	Shipping marks description	M an..35	**M**		
7102	Shipping marks description	C an..35	**O**		
7102	Shipping marks description	C an..35	**O**		
7102	Shipping marks description	C an..35	**O**		
7102	Shipping marks description	C an..35	**O**		
7102	Shipping marks description	C an..35	**O**		
7102	Shipping marks description	C an..35	**O**		
7102	Shipping marks description	C an..35	**O**		
7102	Shipping marks description	C an..35	**O**		
7102	Shipping marks description	C an..35	**O**		
8275	Container or package contents indicator code	C an..3	**N**		
C827	TYPE OF MARKING	C	**N**		
7511	Marking type code	M an..3			
1131	Code list identification code	C an..17			
3055	Code list responsible agency code	C an..3			

Segment Notes:

This segment is used to specify markings and labels on the goods item.

Example:
The packaging for the goods item are marked with the GS1 Serial Shipping Container Code 354123450000000014.
PCI+39'

5. Segments Layout

Segment number: 32

SG18	- C	999 -	GID-TMP-RNG-FTX-SG19-SG20-SG21-SG22-SG23-SG27-SG30
SG23	- C	9 -	PCI-GIN
GIN	- C	9 -	Goods identity number

Function:

To give specific identification numbers, either as single numbers or ranges.

		EDIFACT	GS1	*	Description
7405	Object identification code qualifier	M an..3	**M**	*	AW = Serial shipping container code BJ = Serial shipping container code In EANCOM it is required to use the Serial Shipping Container Code (SSCC's) for unique identification of individual transport packages.
C208	IDENTITY NUMBER RANGE	M	**M**		
7402	Object identifier	M an..35	**M**		
7402	Object identifier	C an..35	**O**		
C208	IDENTITY NUMBER RANGE	C	**O**		
7402	Object identifier	M an..35	**M**		
7402	Object identifier	C an..35	**O**		
C208	IDENTITY NUMBER RANGE	C	**O**		
7402	Object identifier	M an..35	**M**		
7402	Object identifier	C an..35	**O**		
C208	IDENTITY NUMBER RANGE	C	**O**		
7402	Object identifier	M an..35	**M**		
7402	Object identifier	C an..35	**O**		
C208	IDENTITY NUMBER RANGE	C	**O**		
7402	Object identifier	M an..35	**M**		
7402	Object identifier	C an..35	**O**		

Segment Notes:

This segment is used to provide identification numbers marked on the packaging of the current goods item.

Example:
GIN+AW+354123450000000014'

5. Segments Layout

Segment number: 33

SG18	- C	999	-	GID-TMP-RNG-FTX-SG19-SG20-SG21-SG22-SG23-SG27-SG30
SG27	- C	999	-	SGP
SGP	- M	1	-	Split goods placement

Function:

To specify the placement of goods in relation to equipment.

		EDIFACT	GS1	*	Description
C237	EQUIPMENT IDENTIFICATION	M	**M**		
8260	Equipment identifier	C an..17	**R**		The value in DE 8260 indicates the identity number of the equipment in/on which the goods item is transported.
1131	Code list identification code	C an..17	**O**		
3055	Code list responsible agency code	C an..3	**D**		
3207	Country name code	C an..3	**O**		
7224	Package quantity	C n..8	**O**		

Segment Notes:

This segment is used to specify the placement of the goods item in the equipment used for the arriving consignment.

Example:
SGP+45223+1'

5. Segments Layout

Segment number: 34

SG18	- C	999 -	GID-TMP-RNG-FTX-SG19-SG20-SG21-SG22-SG23-SG27-SG30
SG30	- C	99 -	DGS-FTX-SG31-SG32
DGS	- M	1 -	Dangerous goods

Function:
To identify dangerous goods.

		EDIFACT	GS1	*	Description
8273	Dangerous goods regulations code	C an..3	**R**		ADR = European agreement regarding the total carriage of dangerous goods CFR = 49 code of federal regulations RID = Rail/road dangerous goods book (RID)
C205	HAZARD CODE	C	**O**		
8351	Hazard identification code	M an..7	**M**		Classification according ADR/RID rules
8078	Additional hazard classification identifier	C an..7	**O**		Additional according ADR/RID rules
8092	Hazard code version identifier	C an..10	**O**		
C234	UNDG INFORMATION	C	**O**		
7124	United Nations Dangerous Goods (UNDG) identifier	C n4	**O**		
7088	Dangerous goods flashpoint value	C an..8	**O**		Declaration of the flashpoint.
C223	DANGEROUS GOODS SHIPMENT FLASHPOINT	C	**O**		
7106	Shipment flashpoint value	C n3	**O**		
6411	Measurement unit code	C an..3	**O**		CEL = degree celsius
8339	Packaging danger level code	C an..3	**O**		1 = Great danger 2 = Medium danger 3 = Minor danger
8364	Emergency procedure for ships identifier	C an..6	**O**		Only for emergency procedure on ships.
8410	Hazard medical first aid guide identifier	C an..4	**O**		
8126	Transport emergency card identifier	C an..10	**O**		TREM card number according ADR.
C235	HAZARD IDENTIFICATION PLACARD DETAILS	C	**O**		
8158	Orange hazard placard upper part identifier	C an..4	**O**		Danger signs upper part.
8186	Orange hazard placard lower part identifier	C an4	**O**		Danger signs lower part.
C236	DANGEROUS GOODS LABEL	C	**O**		According ADR, FID, IMDG-code, IATA-DGR.
8246	Dangerous goods marking identifier	C an..4	**O**		Number of dangerous goods document primary hazard.
8246	Dangerous goods marking identifier	C an..4	**O**		Number of dangerous goods document secondary hazard.
8246	Dangerous goods marking identifier	C an..4	**O**		

5. Segments Layout

Segment number: 34

		EDIFACT	GS1	*	Description
8255	Packing instruction type code	C an..3	**O**		
8325	Hazardous means of transport category code	C an..3	**O**		Only used by air carrier.
8211	Hazardous cargo transport authorisation code	C an..3	**O**		

Segment Notes:

This segment is used to indicate whether the goods item in the arriving consignment contains any dangerous goods.

Example:
Dangerous goods according to the ADR regulation 3B for extremely flammable liquids with a flashpoint of 21 degrees celsius and a UN number 1178.
DGS+ADR+3B+1178+21.0:CEL'

5. Segments Layout

Segment number: 35

SG18	- C	999 -	GID-TMP-RNG-FTX-SG19-SG20-SG21-SG22-SG23-SG27-SG30
SG30	- C	99 -	DGS-FTX-SG31-SG32
FTX	- C	99 -	Free text

Function:

To provide free form or coded text information.

		EDIFACT	GS1	*	Description
4451	Text subject code qualifier	M an..3	**M**	*	AAC = Dangerous goods additional information AAD = Dangerous goods, technical name
4453	Free text function code	C an..3	**O**		1 = Text for subsequent use
C107	TEXT REFERENCE	C	**D**		This composite is only used when trading partners have agreed to use mutually defined code values.
4441	Free text value code	M an..17	**M**		
1131	Code list identification code	C an..17	**O**		
3055	Code list responsible agency code	C an..3	**D**		89 = Assigned by distributor 90 = Assigned by manufacturer 91 = Assigned by supplier or supplier's agent 92 = Assigned by buyer or buyer's agent
C108	TEXT LITERAL	C	**D**		This composite is only used if coded text can not be used.
4440	Free text value	M an..512	**M**		
4440	Free text value	C an..512	**O**		
4440	Free text value	C an..512	**O**		
4440	Free text value	C an..512	**O**		
4440	Free text value	C an..512	**O**		
3453	Language name code	C an..3	**D**		ISO 639 two alpha code This data element is only used when non coded free text has been provided in data element C108.
4447	Free text format code	C an..3	**N**		

Segment Notes:

This segment is used to specify any additional information required for the dangerous goods.
Use of this segment in free form is not recommended since it may inhibit automatic processing of the arrival notice message. Coded references to standard texts is an available functionality which enables automatic processing and reduces transmission overheads. Standard texts should be mutually defined between trading partners and can be used to cover legal or other requirements.

Example:
FTX+AAD+++DIETHYL ACETALDEHYDE'

5. Segments Layout

Segment number: 36

SG18	- C	999 -	GID-TMP-RNG-FTX-SG19-SG20-SG21-SG22-SG23-SG27-SG30
SG30	- C	99 -	DGS-FTX-SG31-SG32
SG31	- C	9 -	CTA-COM
CTA	- M	1 -	Contact information

Function:

To identify a person or a department to whom communication should be directed.

		EDIFACT	GS1	*	Description
3139	Contact function code	C an..3	**R**		HE = Emergency dangerous goods contact HG = Dangerous goods contact
C056	DEPARTMENT OR EMPLOYEE DETAILS	C	**O**		
3413	Department or employee name code	C an..17	**O**		
3412	Department or employee name	C an..35	**O**		

Segment Notes:

This segment is used to identify a contact name relating to the dangerous goods identified in the DGS segment.

Example:
CTA+HG+:J REEVES'

5. Segments Layout

Segment number: 37

SG18	- C	999 -	GID-TMP-RNG-FTX-SG19-SG20-SG21-SG22-SG23-SG27-SG30
SG30	- C	99 -	DGS-FTX-SG31-SG32
SG31	- C	9 -	CTA-COM
COM	- C	9 -	Communication contact

Function:

To identify a communication number of a department or a person to whom communication should be directed.

		EDIFACT	GS1	*	Description
C076	COMMUNICATION CONTACT	M	**M**		
3148	Communication address identifier	M an..512	**M**		
3155	Communication address code qualifier	M an..3	**M**		AO = Uniform Resource Location (URL) EM = Electronic mail TE = Telephone

Segment Notes:

This segment identifies the communications number and type of communications for the person or department identified in the preceding CTA segment.

Example:
COM+0033148759632:TE'

5. Segments Layout

Segment number: 38

SG18	- C	999 -	GID-TMP-RNG-FTX-SG19-SG20-SG21-SG22-SG23-SG27-SG30
SG30	- C	99 -	DGS-FTX-SG31-SG32
SG32	- C	9 -	MEA-EQN
MEA	- M	1 -	Measurements

Function:

To specify physical measurements, including dimension tolerances, weights and counts.

		EDIFACT	GS1	*	Description
6311	Measurement purpose code qualifier	M an..3	**M**		AAE = Measurement
C502	MEASUREMENT DETAILS	C	**A**		
6313	Measured attribute code	C an..3	**A**		
6321	Measurement significance code	C an..3	**N**		
6155	Non-discrete measurement name code	C an..17	**N**		
6154	Non-discrete measurement name	C an..70	**N**		
C174	VALUE/RANGE	C	**R**		
6411	Measurement unit code	M an..3	**M**		KGM = kilogram
6314	Measurement value	C an..18	**O**		
6162	Range minimum value	C n..18	**O**		
6152	Range maximum value	C n..18	**O**		
6432	Significant digits quantity	C n..2	**N**		
7383	Surface or layer code	C an..3	**N**		

Segment Notes:

This segment is used to indicate measurements of the goods item which are dangerous.

Example:
MEA+AAE+AAF+KGM:500'

5. Segments Layout

Segment number: 39

SG18	- C	999	-	GID-TMP-RNG-FTX-SG19-SG20-SG21-SG22-SG23-SG27-SG30
SG30	- C	99	-	DGS-FTX-SG31-SG32
SG32	- C	9	-	MEA-EQN
EQN	- C	1	-	Number of units

Function:

To specify the number of units.

		EDIFACT	GS1	*	Description
C523	NUMBER OF UNIT DETAILS	M	**M**		
6350	Units quantity	C n..15	**R**		
6353	Unit type code qualifier	C an..3	**O**		2 = Transportable unit

Segment Notes:

This segment is used to indicate the number of units to which the dangerous goods measurements apply.

Example:
EQN+1:2'

5. Segments Layout

Segment number: 40

SG35	- C	999 -	EQD-MEA-DIM-SEL-SG37
EQD	- M	1 -	Equipment details

Function:

To identify a unit of equipment.

		EDIFACT	GS1	*	Description
8053	Equipment type code qualifier	M an..3	**M**		BPN = Box pallet non exchangeable CN = Container EFP = Exchangeable EUR flat pallet PA = Pallet UL = ULD (Unit load device)
C237	EQUIPMENT IDENTIFICATION	C	**R**		
8260	Equipment identifier	C an..17	**O**		
1131	Code list identification code	C an..17	**O**		
3055	Code list responsible agency code	C an..3	**D**		9 = GS1
3207	Country name code	C an..3	**O**		
C224	EQUIPMENT SIZE AND TYPE	C	**O**		
8155	Equipment size and type description code	C an..10	**O**		6 = Pressurized tank 21 = Container IC 20 ft.
1131	Code list identification code	C an..17	**O**		
3055	Code list responsible agency code	C an..3	**D**		
8154	Equipment size and type description	C an..35	**O**		
8077	Equipment supplier code	C an..3	**O**		1 = Shipper supplied 2 = Carrier supplied
8249	Equipment status code	C an..3	**O**		
8169	Full or empty indicator code	C an..3	**O**		4 = Empty 5 = Full

Segment Notes:

This segment is used to indicate the units of equipment which have been used for the transport of the goods items in the arriving consignment.

Example:
EQD+UL+45223'

5. Segments Layout

Segment number: 41

SG35	- C	999 -	EQD-MEA-DIM-SEL-SG37
MEA	- C	9 -	Measurements

Function:

To specify physical measurements, including dimension tolerances, weights and counts.

		EDIFACT	GS1	*	Description
6311	Measurement purpose code qualifier	M an..3	**M**	*	AAE = Measurement
C502	MEASUREMENT DETAILS	C	**A**		
6313	Measured attribute code	C an..3	**A**		AAD = Total gross weight T = Tare weight
6321	Measurement significance code	C an..3	**N**		
6155	Non-discrete measurement name code	C an..17	**O**		
6154	Non-discrete measurement name	C an..70	**N**		
C174	VALUE/RANGE	C	**R**		
6411	Measurement unit code	M an..3	**M**		KGM = kilogram TNE = tonne (metric ton)
6314	Measurement value	C an..18	**O**		
6162	Range minimum value	C n..18	**O**		
6152	Range maximum value	C n..18	**O**		
6432	Significant digits quantity	C n..2	**N**		
7383	Surface or layer code	C an..3	**N**		

Segment Notes:

This segment is used to specify the gross or tare weight of the equipment identified in the previous EQD segment.

Example:
MEA+AAE+AAD+KGM:622'

5. Segments Layout

Segment number: 42

SG35	- C	999 -	EQD-MEA-DIM-SEL-SG37
DIM	- C	9 -	Dimensions

Function:

To specify dimensions.

		EDIFACT	GS1	*	Description
6145	Dimension type code qualifier	M an..3	**M**		9 = Off-standard dimension general 10 = External equipment dimension
C211	DIMENSIONS	M	**M**		
6411	Measurement unit code	M an..3	**M**		MTR = metre
6168	Length dimension value	C n..15	**O**		
6140	Width dimension value	C n..15	**O**		
6008	Height dimension value	C n..15	**O**		

Segment Notes:

This segment is used to indicate the dimensions of the equipment identified in the EQD segment.

Example:
DIM+10+MTR:2:2:1'

5. Segments Layout

Segment number: 43

SG35	- C	999	-	EQD-MEA-DIM-SEL-SG37
SEL	- C	99	-	Seal number

Function:

To specify the seal number or a range of seal numbers.

		EDIFACT	GS1	*	Description
9308	Seal identifier	C an..35	**R**		
C215	SEAL ISSUER	C	**R**		
9303	Sealing party name code	C an..3	**R**		CA = Carrier CU = Customs SH = Shipper
1131	Code list identification code	C an..17	**O**		
3055	Code list responsible agency code	C an..3	**D**		
9302	Sealing party name	C an..35	**O**		
4517	Seal condition code	C an..3	**O**		
C208	IDENTITY NUMBER RANGE	C	**N**		
7402	Object identifier	M an..35			
7402	Object identifier	C an..35			

Segment Notes:

This segment is used to specify a seal number for the equipment identified in the EQD segment.

Example:
SEL+96753+SH'

5. Segments Layout

Segment number: 44

SG35	- C	999	-	EQD-MEA-DIM-SEL-SG37
SG37	- C	9	-	NAD
NAD	- M	1	-	Name and address

Function:

To specify the name/address and their related function, either by C082 only and/or unstructured by C058 or structured by C080 thru 3207.

		EDIFACT	GS1	*	Description
3035	Party function code qualifier	M an..3	**M**		CR = Empty equipment return party CW = Equipment owner
C082	PARTY IDENTIFICATION DETAILS	C	**A**		
3039	Party identifier	M an..35	**M**		For identification of parties it is recommended to use GLN - Format n13.
1131	Code list identification code	C an..17	**N**		
3055	Code list responsible agency code	C an..3	**R**	*	9 = GS1
C058	NAME AND ADDRESS	C	**O**		This composite may only be used to fulfill the requirements of directive 2003/58/EC, article 4.
3124	Name and address description	M an..35	**M**		
3124	Name and address description	C an..35	**O**		
3124	Name and address description	C an..35	**O**		
3124	Name and address description	C an..35	**O**		
3124	Name and address description	C an..35	**O**		
C080	PARTY NAME	C	**D**		
3036	Party name	M an..35	**M**		Party Name in clear text.
3036	Party name	C an..35	**O**		
3036	Party name	C an..35	**O**		
3036	Party name	C an..35	**O**		
3036	Party name	C an..35	**O**		
3045	Party name format code	C an..3	**O**		
C059	STREET	C	**D**		
3042	Street and number or post office box identifier	M an..35	**M**		Building Name/Number and Street
3042	Street and number or post office box identifier	C an..35	**O**		Name and/or P.O. Box
3042	Street and number or post office box identifier	C an..35	**O**		
3042	Street and number or post office box identifier	C an..35	**O**		
3164	City name	C an..35	**D**		City/Town, clear text.
C819	COUNTRY SUB-ENTITY DETAILS	C	**D**		
3229	Country sub-entity name code	C an..9	**O**		
1131	Code list identification code	C an..17	**O**		
	Code list responsible agency				

5. Segments Layout

Segment number: 44

		EDIFACT	GS1	*	Description
3055	code	C an..3	**O**		
3228	Country sub-entity name	C an..70	**O**		County/State, clear text.
3251	Postal identification code	C an..17	**D**		Postal Code
3207	Country name code	C an..3	**D**		ISO 3166 two alpha code

Segment Notes:

This segment is used to specify the equipment owner, pick up or drop off addresses for the equipment specified in the EQD segment.

Example:
NAD+CR+3323456007896::9'

Dependency Notes:
The following composites and data elements are only used when a coded name and address can not be used.
The affected composites and data elements are as follows:
C080 - C059 - 3164 - C819 - 3251 - 3207

5. Segments Layout

Segment number: 45

UNT - M 1 - Message trailer					
Function: To end and check the completeness of a message. Notes: 1. 0062, the value shall be identical to the value in 0062 in the corresponding UNH segment.					
		EDIFACT	GS1	*	Description
0074	Number of segments in a message	M n..10	**M**		The total number of segments in the message is detailed here.
0062	Message reference number	M an..14	**M**		The message reference numbered detailed here should equal the one specified in the UNH segment.
Segment Notes: This segment is used to end and check the completeness of a message. The UNT segment is a mandatory UN/EDIFACT segment. It must always be the last segment in the message. Example: UNT+43+ME000001'					

5. Segments Layout

Segment number: 46

UNZ - M 1 - Interchange trailer					
Function: To end and check the completeness of an interchange. Notes: 1. 0020, the value shall be identical to the value in 0020 in the corresponding UNB segment.					
		EDIFACT	GS1	*	Description
0036	Interchange control count	M n..6	**M**		Number of messages or functional groups within an interchange.
0020	Interchange control reference	M an..14	**M**		Identical to DE 0020 in UNB segment.
Segment Notes: This segment is used to provide the trailer of an interchange. DE 0036: If functional groups are used, this is the number of functional groups within the interchange. If functional groups are not used, this is the number of messages within the interchange. UNZ+5+12345555'					

6. Examples

The following is an example of an arrival notice message from a carrier identified by GLN 5411234512309 to a consignee identified by GLN 5412345123453.

The arrival notice message is identified by number ARN-122 and sent on the 1st of November 2002 at 10am. The message reports the impending arrival of a consignment, identified with number 10203, at the place of delivery which is a location identified by GLN 5412345678908 by a truck from transport company ABC Express with license plate number ACX154. The estimated time of delivery is 2nd of November 2002 at 12.30pm. The disbursements for the consignment are Euros 250. The consignment consists of two goods items with total number of packages being 5, specified as follows:

The first goods item consists of 2 despatch unit of which the package type is returnable pallet and which are identified with EAN.UCC SSCC´s: 354123450000000014, 354123450000000025.

The returnable pallets is said to contain 20 packages with grocery foodstuffs. The total gross weight of the 2 returnable pallets is 75 kg.

The second goods item consists of 3 despatch units of which the package type is a returnable pallet. The pallets with chilled foodstuff. The despatch units are identified with the EAN.UCC SSCC's: 354107380000001051, 354107380000001062, 354107380000001073.

The despatch units are transported at a temperature of 10 degrees Centigrade. Total gross weight of the 3 despatch units is 280 kg, however 1 despatch units weights 100, and the other 2 units weight each 90 kg.

UNH+ME002001+IFTMAN:D:01B:UN:EAN003'	Message header
BGM+781+ARN-122+9‘	Arrival notice number ARN-122
DTM+137+200211011000:203'	Message date 11th November 2002 at 10:00
DTM+17+200211021230:203'	Estimated delivery date 2nd November 2002 at 12:30
MOA+50:250:EUR'	Amount disbursed 250 Euros
CNT+11:5'	Total number of packages 5
LOC+7+5412345678908'	Place of delivery identified by GLN 5412345678908
RFF+UCN+10203'	Unique consignment reference number 10203
TDT+20++30+31+:::ABC EXPRESS+++:::ACX154'	Transported by a truck from ABC Express plates: ACX154
NAD+CN+5412345123453::9'	Consignee identified by GLN 5412345123453
NAD+CA+5411234512309::9'	Carrier identified by GLN 5411234512309
GID+1+2:09::9+20:PK'	First occurrence 2 returnable pallets of 20 packages each
FTX+AAA+++GROCERY FOODSTUFFS'	Goods description in free text
MEA+WT+G+KGM:75'	The gross weight of the goods identified in the GID is 75 Kg.
PCI+33E+354123450000000014:354123450000000025'	The pallets are marked with the EAN.UCC Serial Shipping Container Code numbers 354123450000000014 and 354123450000000025
GID+2+3:09::9'	Second occurrence 3 returnable pallets

6. Examples

TMP+2+10.0:CEL'	The transport temperature is 10 degree Celsius
FTX+AAA+++CHILLED FOODSTUFFS'	Goods description in free text
MEA+WT+G+KGM:280'	The gross weight of the goods identified in the GID is 280 Kg.
MEA+WT+AAB+KGM:100'	The unit gross weight of the goods 100 Kg.
EQN+1'	The measurement apply to just one package
MEA+WT+AAB+KGM:90'	The unit gross weight of the goods 90 Kg
EQN+2'	The measurement apply to two packages
PCI+33E+354107380000001051:354107380000001062:	The pallets are marked with the EAN.UCC SSCC's
354107380000001073'	
UNT+25+ME002001'	Total number of segments in the message equals 25

Note :
The EDI interchange will include the UNB..UNZ segments and, if applicable, the UNG..UNE segments. (See part 1 section 5.7).