EANCOM® 2002 S4

DIRDEB

Direct debit message

Edition 2016 Upd. 2021

1. Introduction 2
2. Message Structure Chart 5
3. Branching Diagram 7
4. Segments Description 16
5. Segments Layout 23
6. Example(s) 105

1. Introduction

Status

MESSAGE TYPE	: DIRDEB
REFERENCE DIRECTORY	: D.01B
EANCOM® SUBSET VERSION	: 003

Definition

A Direct Debit is sent by the Creditor to the Creditor's Bank instructing it to claim specified amount(s) from the Debtor(s) and to credit the amount(s) to an account specified in the message, which the Creditor's Bank services for the Creditor in settlement of the referenced transaction(s).

Note: Throughout this document the term 'Creditor' refers to either a Beneficiary, Payee or Supplier, likewise the term 'Debtor' refers to either an Ordering Customer, Payor, or Buyer.

Prior to the Direct Debit procedure, some agreement(s) would usually have been concluded :

- agreement between the Creditor and his Bank (mainly to specify the conditions of credit and the kind of direct debit).
- agreement between the Debtor and the Debtor's Bank (i.e. pre-authorisation and condition of debit), or between the Creditor and the Debtor.

The term 'pre-authorisation' refers to an agreement between a Creditor and a Debtor for:

- either automatic debiting, as required,
- or for debiting unless rejected by the debtor in a period of time.

The agreement can also be made between the debtor and his bank, independently of the amount of the DIRDEB.

Principles

- A Direct Debit may cover the financial settlement(s) of one or more commercial trade transactions, such as invoices, credit notes, debit notes, etc.
- Several credit accounts, execution dates and currencies may be specified.
- Charges may be borne on account(s) different of the account(s) held by the Creditor.
- The Creditor's Bank may need a confirmation/authorisation from the creditor to be able to process the Direct Debit Message.
- Pre-authorised and non pre-authorised direct debits shall not be mixed within the same message.
- The only way to modify a Direct Debit message is to cancel the whole message or a transaction thereof (e.g. by the use of the FINCAN message). In that respect, one to many order(s) could be cancelled within the message, avoiding to be obliged to cancel the whole message.
- The originator of the message can only effect the cancellation of a Direct Debit message. The kind of cancellation is dependent upon the process of the message or a transaction of it.

***** **<u>Notes.</u>**

The Multiple Direct Debit message is structured in three levels: A, B, and C.

Level A

Header Section - This section, A, contains general data related to the whole **message** and is

1. Introduction

contained in Segment Groups 1, 2, and 3 and 24.

Level B

Credit Side Detail - This section, B, contains **batches** of data. Each batch is organised from the credit side's perspective, i.e. one credit account, one currency, one execution day and one credit batch total amount. Each batch then contains detailed data which applies to all the dependent C levels, i.e. the individual direct debit transactions, and is contained in Segment Group 4 through Segment Group 10.

Level C

Direct Debit Detail - This section, C, contains data related to the debit side, i.e. the individual direct debit **transactions**. The data is a unique set for each direct debit transaction and is contained in Segment Group 11 through Segment Group 23. There can be one or many individual transactions within each batch.

The structure of the message is designed to allow several B level **batches**, each being followed by one or more related C level **transactions**. Each C level is followed by its associated **remittance** details.

***** **Scenario.**

While the Direct Debit message is similar in content to the Multiple Payment Order (PAYMUL) message, it is very different in application. The Multiple Payment Order message is sent by an ordering party (normally the payer or buyer) to instruct it's bank to effect a payment to a names beneficiary or beneficiaries (payee or supplier). The Direct Debit message is almost a complete inversion of this scenario.

The Direct Debit message is sent by a Creditor (beneficiary/payee/supplier) to its bank instructing the bank to collect funds from the account of a Debtor (payer/buyer). The Direct Debit message will normally be subject to a Direct Debit Mandate. A Direct Debit Mandate is an agreement between the Creditor and the Debtor, which allows the Creditor to demand payment from the bank of the Debtor.

1. Introduction

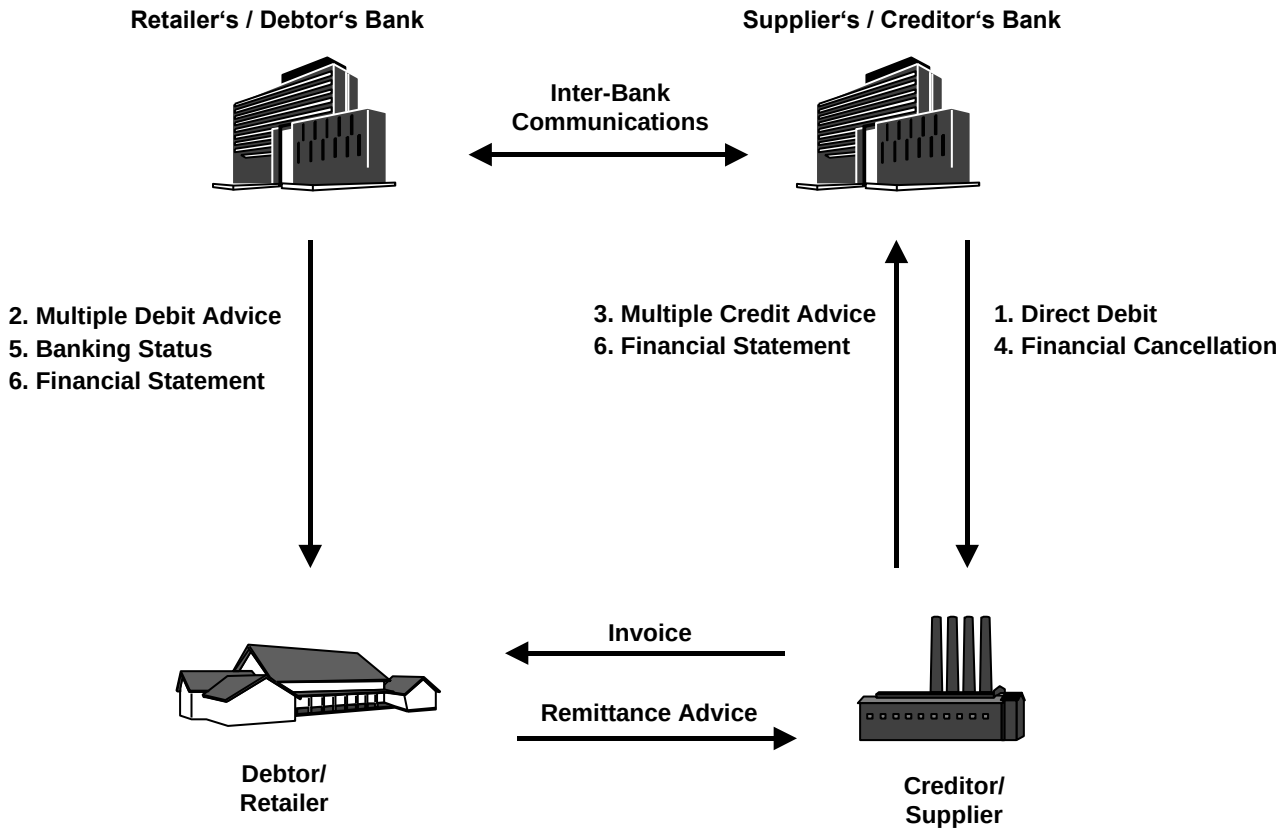

The processes which follow the Direct Debit are the same as those which occur after a Multiple Payment Order message, i.e., debiting of the debtors account is reported to the debtor using the Multiple Debit Advice (DEBMUL) message, crediting of the Creditor’s account is reported to the creditor using the Multiple Credit Advice (CREMUL) message, etc.

2. Message Structure Chart

	UNB		1	M	1	- Interchange header
	Direct Debit Heading Section				
	UNH		2	M	1	- Message header
	BGM		3	M	1	- Beginning of message
	DTM		4	M	1	- Date/time/period
	BUS		5	C	1	- Business function
	SG2			C	5	- FII
	FII		6	M	1	- Financial institution information
	SG3			C	3	- NAD
	NAD		7	M	1	- Name and address
	Direct Debit Detail Section				
	SG4			M	9999	- LIN-DTM-RFF-BUS-FCA-SG5-SG6-SG7-SG8-SG9-SG10-SG11
	LIN		8	M	1	- Line item
	DTM		9	C	1	- Date/time/period
	RFF		10	C	2	- Reference
	BUS		11	C	1	- Business function
	FCA		12	C	1	- Financial charges allocation
	SG5			C	1	- MOA-CUX-DTM-RFF
	MOA		13	M	1	- Monetary amount
	CUX		14	C	1	- Currencies
	DTM		15	C	2	- Date/time/period
	RFF		16	C	1	- Reference
	SG6			M	1	- FII
	FII		17	M	1	- Financial institution information
	SG7			C	3	- NAD
	NAD		18	M	1	- Name and address
	SG8			C	1	- INP-FTX-DTM
	INP		19	M	1	- Parties and instruction
	FTX		20	C	1	- Free text
	DTM		21	C	2	- Date/time/period
	SG9			C	10	- GIS-MOA-LOC-NAD-RCS-FTX
	GIS	X	22	M	1	- General indicator
	MOA		23	C	1	- Monetary amount
	LOC		24	C	2	- Place/location identification
	NAD		25	C	1	- Name and address
	RCS		26	C	1	- Requirements and conditions
	FTX		27	C	10	- Free text
	SG10			C	1	- PRC-FTX
	PRC		28	M	1	- Process identification
	FTX		29	M	1	- Free text
	SG11			M	99999	- SEQ-MOA-DTM-RFF-FCA-SG12-SG13-SG14-SG15-SG16
	SEQ		30	M	1	- Sequence details
	MOA		31	M	1	- Monetary amount
	DTM		32	C	1	- Date/time/period
	RFF		33	C	3	- Reference
	FCA		34	C	1	- Financial charges allocation
	SG12			C	3	- FII
	FII		35	M	1	- Financial institution information
	SG13			C	3	- NAD
	NAD		36	M	1	- Name and address
	SG14			C	3	- INP-FTX-DTM
	INP		37	M	1	- Parties and instruction
	FTX		38	C	1	- Free text
	DTM		39	C	2	- Date/time/period
	SG15			C	10	- GIS-MOA-LOC-NAD-RCS-FTX
	GIS	X	40	M	1	- General indicator
	MOA		41	C	1	- Monetary amount

2. Message Structure Chart

LOC		42	C	2	- Place/location identification
NAD		43	C	1	- Name and address
RCS		44	C	1	- Requirements and conditions
FTX		45	C	10	- Free text
SG16			C	1	- PRC-FTX-SG17-SG23
PRC		46	M	1	- Process identification
FTX		47	C	5	- Free text
SG17			C	9999	- DOC-MOA-DTM-RFF-NAD-SG18-SG19-SG20
DOC		48	M	1	- Document/message details
MOA		49	C	5	- Monetary amount
DTM		50	C	5	- Date/time/period
RFF		51	C	5	- Reference
NAD		52	C	2	- Name and address
SG18			C	5	- CUX-DTM
CUX		53	M	1	- Currencies
DTM		54	C	1	- Date/time/period
SG19			C	100	- AJT-MOA-RFF
AJT		55	M	1	- Adjustment details
MOA		56	M	1	- Monetary amount
RFF		57	C	1	- Reference
SG20			C	1000	- DLI-MOA-PIA-SG22
DLI		58	M	1	- Document line identification
MOA		59	M	5	- Monetary amount
PIA		60	C	5	- Additional product id
SG22			C	10	- AJT-MOA-RFF
AJT		61	M	1	- Adjustment details
MOA		62	M	1	- Monetary amount
RFF		63	C	1	- Reference
SG23			C	1	- GIS-MOA
GIS	X	64	M	1	- General indicator
MOA		65	C	5	- Monetary amount

Direct Debit Summary Section

CNT		66	C	5	- Control total
SG24			C	5	- AUT-DTM
AUT		67	M	1	- Authentication result
DTM		68	C	1	- Date/time/period
UNT		69	M	1	- Message trailer
UNZ		70	M	1	- Interchange trailer

3. Branching Diagram

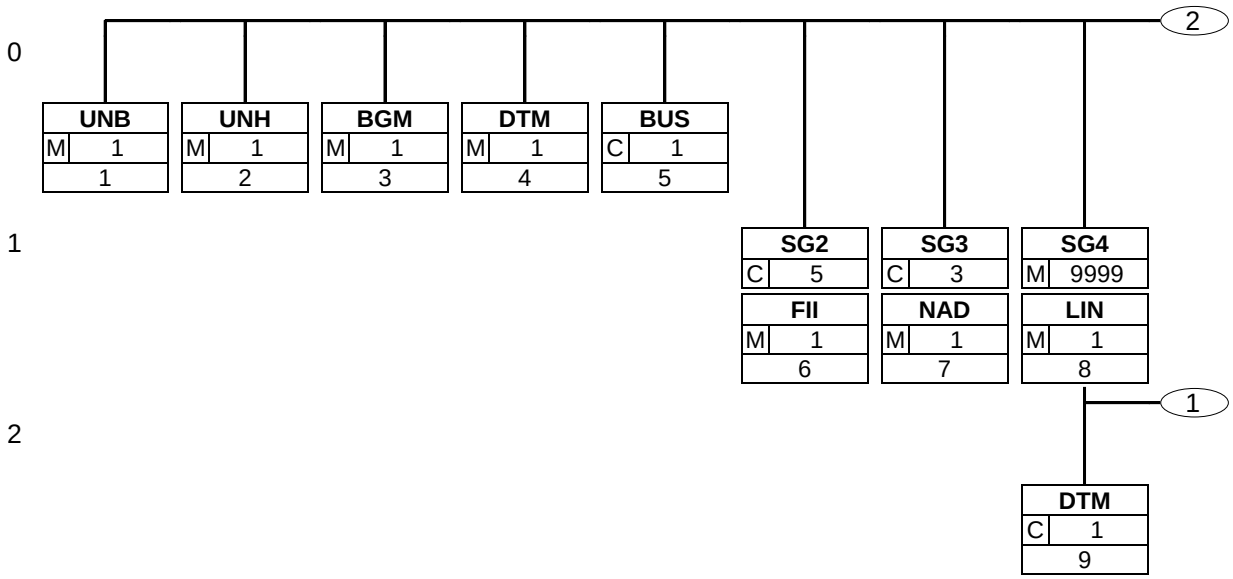

3. Branching Diagram

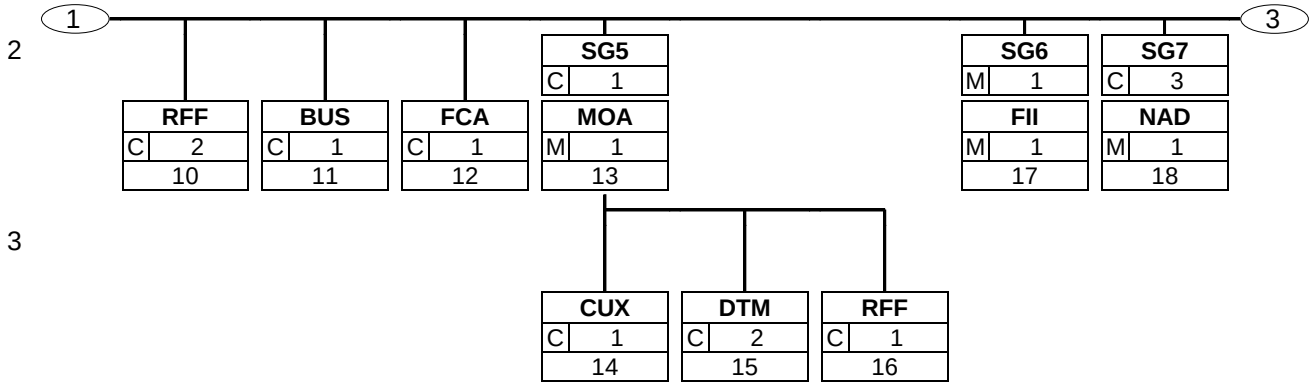

3. Branching Diagram

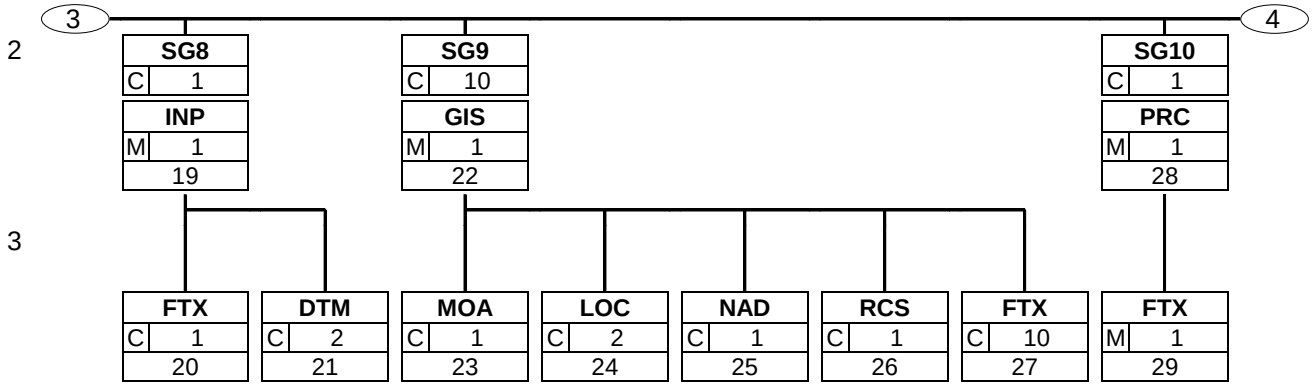

3. Branching Diagram

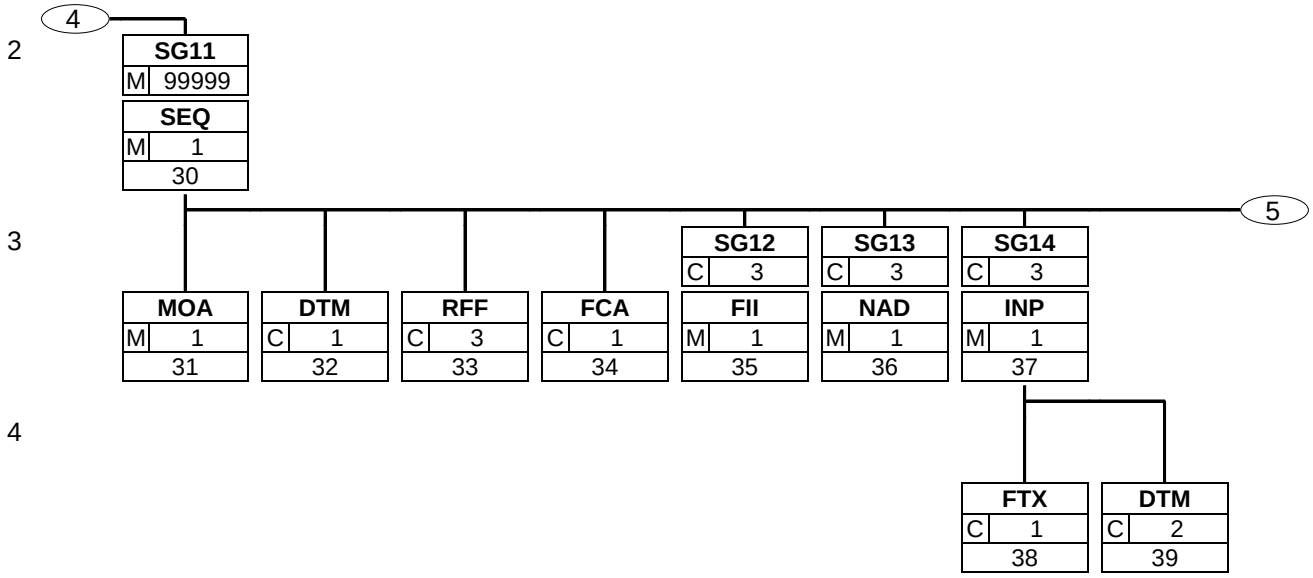

3. Branching Diagram

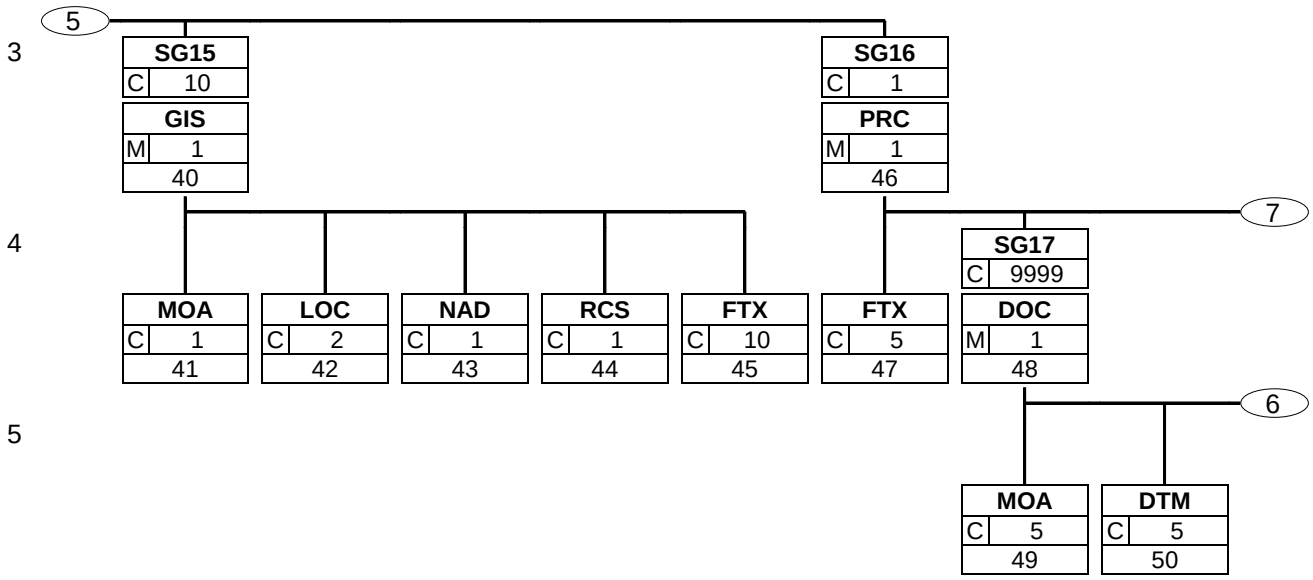

3. Branching Diagram

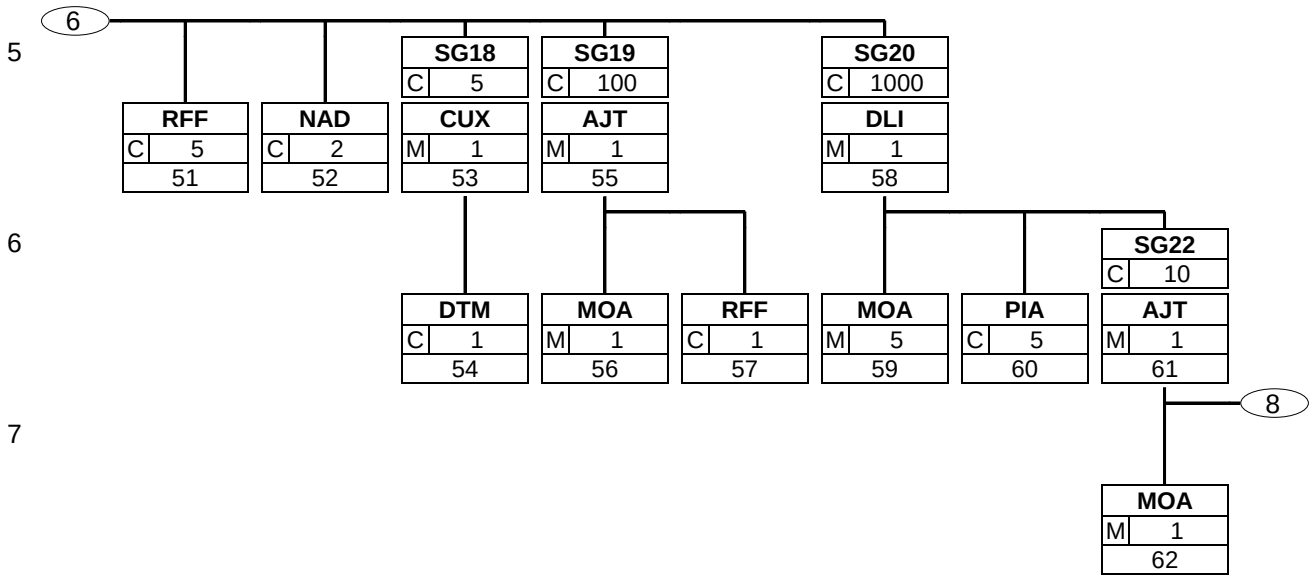

3. Branching Diagram

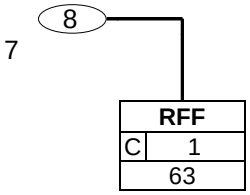

3. Branching Diagram

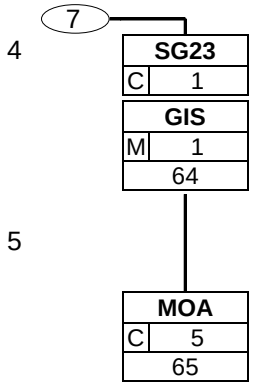

3. Branching Diagram

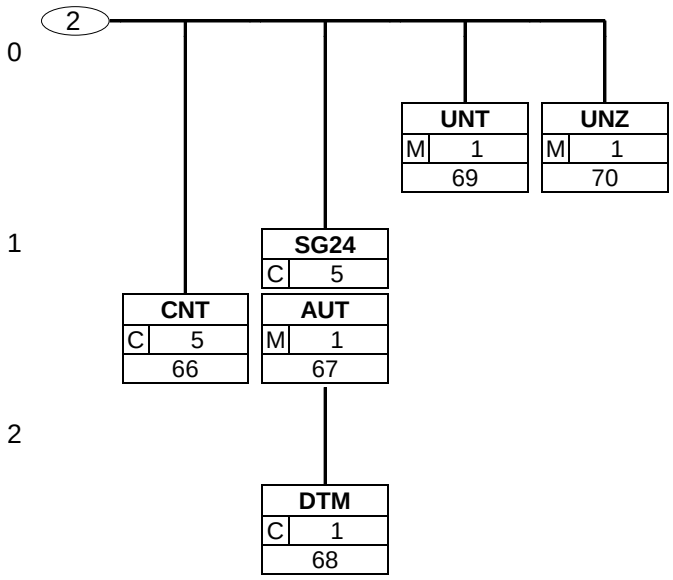

4. Segments Description

UNB - M 1 - Interchange header

This segment is used to envelope the interchange, as well as to identify both, the party to whom the interchange is sent and the party who has sent the interchange. The principle of the UNB segment is the same as a physical envelope which covers one or more letters or documents, and which details, both the address where delivery is to take place and the address from where the envelope has come.

Direct Debit Heading Section

UNH - M 1 - Message header

This segment is used to head, identify and specify a message.

BGM - M 1 - Beginning of message

This segment is used to indicate the type and function of the message and to transmit the identifying number.

DTM - M 1 - Date/time/period

This segment is used to specify the date on which the Direct Debit message was created.

BUS - C 1 - Business function

This segment is used to indicate the geographical environment of the direct debits contained in the message.

SG2 - C 5 - **FII**

A group of segments identifying the financial institutions involved in the direct debit.

FII - M 1 - Financial institution information

This segment is used to identify the receiving financial institution of the Direct Debit message.

SG3 - C 3 - **NAD**

A group of segments identifying the name(s) and address(es) of each non-financial party involved in the transaction.

NAD - M 1 - Name and address

This segment is used to identify the sender of the direct debit message.

Direct Debit Detail Section

SG4 - M 9999 - **LIN-DTM-RFF-BUS-FCA-SG5-SG6-SG7-SG8-SG9-SG10-SG11**

A group of segments containing information regarding the credit side of the transaction and details which are pertinent to all direct debits specified within the group. Certain payment details may be provided either in segment group 4 or in segment group 11, but not in both.

LIN - M 1 - Line item

This segment is used to identify a line within the direct debit by means of a incrementing unique line number.

DTM - C 1 - Date/time/period

This segment is used to specify a date related to the batch (credit side) of direct debits. This date applies to all individual transactions which do not have an individual date specified.

RFF - C 2 - Reference

This segment is used to identify the reference number of the credit transaction which results from the message. This number, along with the message number detailed in data element 1004 in the BGM segment, are passed back to the debtor in the debit advice (and multiple debit advice), banking status, and financial messages.

4. Segments Description

BUS	- C	1	- Business function This segment is used to identify the characteristics of the transactions detailed in level C of the message.
FCA	- C	1	- Financial charges allocation This segment is used to identify the party on which any charges are allocated and the account to which the charges should be directed.
SG5	- C	1	- **MOA-CUX-DTM-RFF** A group of segments containing the currency of the single amounts on the debit side of the transaction (C level), currency to be collected, plus the total of all single amounts of the debit side of the transaction (C level).
MOA	- M	1	- Monetary amount This segment is used to specify the total amount for this batch of direct debits, the currency in which it is stated, and an indication whether this amount is the total of the transaction amounts or of bank settlement amounts.
CUX	- C	1	- Currencies This segment is used to specify the currency of the monetary amount detailed in the previous MOA segment. The CUX segment is only used if code 57 (Equivalent amount) has been used in data element 5025 of the previous MOA segment.
DTM	- C	2	- Date/time/period This segment is used to specify reference and rate of exchange dates.
RFF	- C	1	- Reference This segment is used to provide references to other transactions negotiated between the creditor and the creditors bank which will be used to finance the direct debit, e.g. a separate foreign exchange deal.
SG6	- M	1	- **FII** A group of segments containing the account servicing bank including the account to be credited. If the creditor is not quoted separately in the NAD segment on the credit side of the transaction (B level), then this group also contains the information of the creditor.
FII	- M	1	- Financial institution information This segment is used to identify the financial institution and account information related to the creditor.
SG7	- C	3	- **NAD** A group of segments identifying the creditor. Furthermore, one contact party can also be quoted in this group.
NAD	- M	1	- Name and address This segment is used to identify the creditor that will receive the credit transaction.
SG8	- C	1	- **INP-FTX-DTM** A group of segments containing instructions from the creditor relating to parties identified in the NAD and FII segments. It specifies action to be taken by the identified parties, and the date (and optionally time) by which such action needs to be taken.
INP	- M	1	- Parties and instruction This segment is used to identify the party who must carry out an instruction from the creditor, and the party to whom the instruction is intended.
FTX	- C	1	- Free text This segment is used to provide additional coded or free text instructions to those provided in the INP segment.
DTM	- C	2	- Date/time/period This segment is used to specify the dates and or times related to the instructions.

4. Segments Description

SG9 - C 10 - **GIS-MOA-LOC-NAD-RCS-FTX**

A group of segments providing information for subsequent use by regulatory authorities requiring statistical and other types of data. It also identifies the regulatory authority for which the information is intended followed by the information itself.

GIS - M 1 - General indicator

This segment is used to indicate that the information contained in the following segments will be passed on to and processed by the central and regulatory party identified in the NAD segment.

MOA - C 1 - Monetary amount

This segment is used to specify monetary amounts which must be reported to the regulatory party identified in the NAD segment.

LOC - C 2 - Place/location identification

This segment is used to indicate any locations relevant to the regulatory party identified in the NAD segment.

NAD - C 1 - Name and address

This segment is used to identify the central and regulatory authority specifying the regulatory information detailed in the GIS and FTX segments.

RCS - C 1 - Requirements and conditions

This segment is used to indicate any requirements and conditions related to the transaction which is being reported to the regulatory authorities.

FTX - C 10 - Free text

This segment is used to provide free or coded text information required by the regulatory authorities. The form and content of this segment is dependent upon the central bank or regulatory authority's requirements.

SG10 - C 1 - **PRC-FTX**

A group of segments giving information in free form about the purpose of the direct debit from the creditor to the debtors.

PRC - M 1 - Process identification

This segment is used to provide processing information for each beneficiary of the debit instructions.

FTX - M 1 - Free text

This segment is used to provide free or coded text information related to the processing of the payment.

SG11 - M 99999 - **SEQ-MOA-DTM-RFF-FCA-SG12-SG13-SG14-SG15-SG16**

This Segment Group contains information regarding the debtor(s) of the direct debit. Certain payment details may be provided either in Segment Group 11 or in Segment Group 4, but not in both.

SEQ - M 1 - Sequence details

This segment is used to identify the start of the credit side of the transaction (level C) by means of a sequence number within the current line number. The sequence number should be incremented by one for each occurrence of a new line number (in LIN segment).

MOA - M 1 - Monetary amount

This segment is used to specify the payment amount for the credit instruction.

DTM - C 1 - Date/time/period

This segment is used to specify dates relevant to the debtor's side of the direct debit transaction.

4. Segments Description

RFF - C 3 - Reference

This segment is used to identify the individual direct debit transaction in a way which is meaningful to the creditor and the debtor.

FCA - C 1 - Financial charges allocation

This segment is used to identify the basis on which any charges are allocated and the account (of the debtor) to which the charges should be directed.

SG12 - C 3 - **FII**

A group of segments containing the debtor's bank and the account and if necessary up to two intermediary banks.

FII - M 1 - Financial institution information

This segment is used to identify the financial institution and account number of the debtor.

SG13 - C 3 - **NAD**

A group of segments identifying the name and address of the debtor and one contact party.

NAD - M 1 - Name and address

This segment is used to identify the debtor in the direct debit transactions and is passed on unchanged through the banking chain.

SG14 - C 3 - **INP-FTX-DTM**

A group of segments containing instructions from the creditor relating to parties identified in the NAD and FII segments. It specifies action to be taken by the identified parties, and the date (and optionally time) by which such actions needs to be taken.

INP - M 1 - Parties and instruction

This segment is used to identify the party who must carry out an instruction from the creditor, and the party to whom the instruction is intended.

FTX - C 1 - Free text

This segment is used to provide additional coded or free text instructions to those provided in the INP segment.

DTM - C 2 - Date/time/period

This segment is used to specify the earliest and latest dates by which the instructions must be carried out.

SG15 - C 10 - **GIS-MOA-LOC-NAD-RCS-FTX**

A group of segments providing information for subsequent use by regulatory authorities requiring statistical and other types of data. It also identifies the regulatory authority for which the information is intended followed by the information itself.

GIS - M 1 - General indicator

This segment is used to indicate that the information contained in the following segments will be passed on to and processed by the central and regulatory party identified in the NAD segment.

MOA - C 1 - Monetary amount

This segment is used to specify monetary amounts which must be reported to the regulatory party identified in the NAD segment.

LOC - C 2 - Place/location identification

This segment is used to indicate any locations relevant to the regulatory party identified in the NAD segment.

NAD - C 1 - Name and address

This segment is used to identify the central and regulatory authority specifying the regulatory information detailed in the GIS and FTX segments.

4. Segments Description

RCS - C 1 - Requirements and conditions

This segment is used to indicate any requirements and conditions related to the transaction which is being reported to the regulatory authorities.

FTX - C 10 - Free text

This segment is used to provide free or coded text information required by the regulatory authorities. The form and content of this segment is dependent upon the central bank or regulatory authority's requirements.

SG16 - C 1 - **PRC-FTX-SG17-SG23**

A group of segments containing the details of the direct debit. The content of these segments is passed through the banking chain from the creditor to the debtor.

PRC - M 1 - Process identification

This segment is used to provide processing information related to an individual direct debit transaction.

FTX - C 5 - Free text

This segment is used to provide free or coded text information related to the processing of the direct debit transaction.

SG17 - C 9999 - **DOC-MOA-DTM-RFF-NAD-SG18-SG19-SG20**

A group of segments providing details of all documents e.g., invoices, statements, despatch advices, etc., to which the direct debit refers. It includes information on the monetary amounts for each document and on any adjustments (with an indication of the reason for adjustments) and discounts.

DOC - M 1 - Document/message details

This segment is used to provide details of the documents, e.g. a group of invoices, to which an individual direct debit transaction refers.

MOA - C 5 - Monetary amount

This segment is used to specify monetary amounts related to the complete document identified in the previous DOC segment.

DTM - C 5 - Date/time/period

This segment is used to specify dates related to the document identified in the DOC segment.

RFF - C 5 - Reference

This segment is used to provide any additional references relevant to the currently identified DOC segment.

NAD - C 2 - Name and address

This segment is used to identify any additional parties related to the currently identified document, e.g. delivery party.

SG18 - C 5 - **CUX-DTM**

A group of segments specifying the currencies and the related dates/periods valid to the referenced document where different to the reference currency.

CUX - M 1 - Currencies

This segment is used to provide currency rate of exchange information used to convert amounts specified in the MOA segment for the referenced document, to an amount expressed in terms of the remittance/payment currency. This CUX segment will only be used when the currency of its rate of exchange is different from the default global currency or its rate of exchange specified in the CUX segment at heading level.

DTM - C 1 - Date/time/period

This segment is used to specify any dates related to the currency information specified in the previous CUX segment.

4. Segments Description

SG19 - C 100 - **AJT-MOA-RFF**

A group of segments indicating adjustment amounts and their referenced documents.

AJT - M 1 - Adjustment details

This segment is used to indicate the reason for an adjustment to the current document.

MOA - M 1 - Monetary amount

This segment is used to indicate the value of the adjusted amount for the current document.

RFF - C 1 - Reference

This segment is used to specify any references associated with the adjusted amounts.

SG20 - C 1000 - **DLI-MOA-PIA-SG22**

A group of segments which may be used when required to provide details of individual line items in the reference document.

DLI - M 1 - Document line identification

This segment is used to identify individual line items within the document identified in the DOC segment.

MOA - M 5 - Monetary amount

This segment is used to indicate the amount due and the amount remitted for the line item identified in the DLI segment for the current document.

PIA - C 5 - Additional product id

This segment is used to provide the product identification of the line item detailed in the DLI segment for the current document.

SG22 - C 10 - **AJT-MOA-RFF**

A group of segments indicating adjustment amounts and their reference documents.

AJT - M 1 - Adjustment details

This segment is used to indicate the reason for an adjustment to the current line identified in the DLI segment.

MOA - M 1 - Monetary amount

This segment is used to indicate the value of the adjusted amount for the current line item.

RFF - C 1 - Reference

This segment is used to specify any references associated with the adjustment amounts for the current line item.

SG23 - C 1 - **GIS-MOA**

A group of segments indicating the end of the details of payment and specifying hash total amounts for control purposes.

GIS - M 1 - General indicator

This segment is used to indicate the end of the detail of payment.

MOA - C 5 - Monetary amount

This segment is used to indicate the total value of level C for control purposes. The figure detailed here is simply an accumulation of the values specified in all MOA segments in level C regardless of the qualifiers used in DE 5025.

Direct Debit Summary Section

CNT - C 5 - Control total

This segment is used to provide application data for message control purposes.

4. Segments Description

SG24 - C 5 - **AUT-DTM**

A group of segments specifying details of any authentication (validation) procedures applied to the DIRDEB message.

AUT - M 1 - Authentication result

This segment is used to provide details of any authentication procedures which have been applied to the direct debit message. The use of this segment is, including any algorithms and calculation procedures, dependent on bilaterally agreed conditions between the message sender and receiver.

DTM - C 1 - Date/time/period

This segment is used to provide details related to the date and where necessary, the time, of the direct debit message validation.

UNT - M 1 - Message trailer

The UNT segment is a mandatory UN/EDIFACT segment. It must always be the last segment in the message.

UNZ - M 1 - Interchange trailer

This segment is used to provide the trailer of an interchange.

5. Segments Layout

This section describes each segment used in the EANCOM® Direct Debit message. The original EDIFACT segment layout is listed. The appropriate comments relevant to the EANCOM® subset are indicated.

Notes:

1. The segments are presented in the sequence in which they appear in the message. The segment or segment group tag is followed by the (M)andatory / (C)onditional indicator, the maximum number of occurrences and the segment description.

2. Reading from left to right, in column one, the data element tags and descriptions are shown, followed by in the second column the EDIFACT status (M or C), the field format, and the picture of the data elements. These first pieces of information constitute the original EDIFACT segment layout.

   Following the EDIFACT information, EANCOM® specific information is provided in the third, fourth, and fifth columns. In the third column a status indicator for the use of (C)onditional EDIFACT data elements (see 2.1 through 2.3 below), in the fourth column the restricted indicator (see point 3 on the following page), and in the fifth column notes and code values used for specific data elements in the message.

2.1 (M)andatory data elements in EDIFACT segments retain their status in EANCOM®.

2.2 Additionally, there are five types of status for data elements with a (C)onditional EDIFACT status, whether for simple, component or composite data elements. These are listed below and can be identified when relevant by the following abbreviations:

- REQUIRED	**R**	Indicates that the entity is required and must be sent.
- ADVISED	**A**	Indicates that the entity is advised or recommended.
- DEPENDENT	**D**	Indicates that the entity must be sent in certain conditions, as defined by the relevant explanatory note.
- OPTIONAL	**O**	Indicates that the entity is optional and may be sent at the discretion of the user.
- NOT USED	**N**	Indicates that the entity is not used and should be omitted.

2.3 If a composite is flagged as **N, NOT USED**, all data elements within that composite will have blank status indicators assigned to them.

3. Status indicators detailed in the fourth column which directly relate to the code values detailed in the fifth **column** may have two values:

- RESTRICTED	*****	A data element marked with an asterisk (*) in the fourth column indicates that the listed codes in column five are the only codes available for use with this data element, in this segment, in this message.
- OPEN		All data elements where coded representation of data is possible and a restricted set of code values is not indicated are open (no asterisk in fourth column). The available codes are listed in the EANCOM® Data Elements and Code Sets Directory. Code values may be given as examples or there may be a note on the format or type of code to be used.

4. Different colours are used for the code values in the segment details: restricted codes are in red and open codes in blue.

5. Segments Layout

Segment number: 1

UNB - M 1 - Interchange header					
Function: To identify an interchange. Notes: 1. S001/0002, shall be '4' to indicate this version of the syntax. 2. The combination of the values carried in data elements S002, S003 and 0020 shall be used to identify uniquely the interchange, for the purpose of acknowledgement.					
		EDIFACT	GS1	*	Description
S001	SYNTAX IDENTIFIER	M	**M**		See Part I chapter 5.2.7 and segment notes.
0001	Syntax identifier	M a4	**M**	*	UNOA = UN/ECE level A UNOB = UN/ECE level B UNOC = UN/ECE level C UNOD = UN/ECE level D UNOE = UN/ECE level E UNOF = UN/ECE level F UNOG = UN/ECE level G UNOH = UN/ECE level H UNOI = UN/ECE level I UNOJ = UN/ECE level J UNOK = UN/ECE level K UNOW = UN/ECE level W UNOX = UN/ECE level X UNOY = UN/ECE level Y
0002	Syntax version number	M an1	**M**	*	4 = Version 4
0080	Service code list directory version number	C an..6	**N**		
0133	Character encoding, coded	C an..3	**N**		
S002	INTERCHANGE SENDER	M	**M**		
0004	Interchange sender identification	M an..35	**M**		GLN (n13)
0007	Identification code qualifier	C an..4	**R**	*	14 = GS1
0008	Interchange sender internal identification	C an..35	**O**		
0042	Interchange sender internal sub-identification	C an..35	**N**		
S003	INTERCHANGE RECIPIENT	M	**M**		
0010	Interchange recipient identification	M an..35	**M**		GLN (n13)
0007	Identification code qualifier	C an..4	**R**	*	14 = GS1
0014	Interchange recipient internal identification	C an..35	**O**		
0046	Interchange recipient internal sub-identification	C an..35	**N**		
S004	DATE AND TIME OF PREPARATION	M	**M**		
0017	Date	M n8	**M**		CCYYMMDD
0019	Time	M n4	**M**		HHMM
0020	Interchange control reference	M an..14	**M**		Unique reference identifying the interchange. Created

5. Segments Layout

Segment number: 1

		EDIFACT	GS1	*	Description
					by the interchange sender.
S005	RECIPIENT REFERENCE/ PASSWORD DETAILS	C	**O**		
0022	Recipient reference/password	M an..14	**M**		
0025	Recipient reference/password qualifier	C an2	**O**		
0026	Application reference	C an..14	**O**		Message identification if the interchange contains only one type of message.
0029	Processing priority code	C a1	**O**		A = Highest priority
0031	Acknowledgement request	C n1	**O**		1 = Requested
0032	Interchange agreement identifier	C an..35	**O**	*	EANCOM.....
0035	Test indicator	C n1	**O**		1 = Interchange is a test

Segment Notes:

This segment is used to envelope the interchange, as well as to identify both, the party to whom the interchange is sent and the party who has sent the interchange. The principle of the UNB segment is the same as a physical envelope which covers one or more letters or documents, and which details, both the address where delivery is to take place and the address from where the envelope has come.
S001: The character encoding specified in basic code table of ISO/IEC 646 (7-bit coded character set for information interchange) shall be used for the interchange service string advice (if used) and up to and including the composite data element S001 'Syntax identifier' in the interchange header. The character repertoire used for the characters in an interchange shall be identified from the code value of data element 0001 in S001 'Syntax identifier' in the interchange header. The character repertoire identified does not apply to objects and/or encrypted data.
The default encoding technique for a particular repertoire shall be the encoding technique defined by its associated character set specification.
DE 0001: The recommended (default) character set for use in EANCOM® for international exchanges is character set A (UNOA). Should users wish to use character sets other than A, an agreement on which set to use should be reached on a bilateral basis before communications begin.
DE 0004, 0008, 0010 and 0014: Within EANCOM® the use of the Global Location Number (GLN) is recommended for the identification of the interchange sender and recipient.
DE 0008: Identification (e.g. a division) specified by the sender of the interchange, to be included if agreed, by the recipient in response interchanges, to facilitate internal routing.
DE 0014: The address for routing, provided beforehand by the interchange recipient, is used by the interchange sender to inform the recipient of the internal address, within the latter's systems, to which the interchange should be routed. It is recommended that the GLN be used for this purpose.
DE 0007: Identification (e.g. a division) specified by the recipient of the interchange, to be included if agreed, by the sender in response interchanges, to facilitate internal routing.
DE S004: The date and time specified in this composite should be the date and time at which the interchange sender prepared the interchange. This date and time may not necessarily be the same as the date and time of contained messages.
DE 0020: The interchange control reference number is generated by the interchange sender and is used to identify uniquely each interchange. Should the interchange sender wish to re-use interchange control reference numbers, it is recommended that each number be preserved for at least a period of three months before being re-used. In order to guarantee uniqueness, the interchange control reference number should always be linked to the interchange sender's identification (DE 0004).
DE S005: The use of passwords must first be agreed bilaterally by the parties exchanging the interchange.
DE 0026: This data element is used to identify the application, on the interchange recipient's system, to which the interchange is directed. This data element may only be used if the interchange contains only one type of message, (e.g. only invoices). The reference used in this data element is assigned by the interchange sender.
DE 0031: This data element is used to indicate whether an acknowledgement to the interchange is required. The EANCOM® APERAK or CONTRL message should be used to provide acknowledgement of interchange receipt. In addition, the EANCOM® CONTRL message may be used to indicate when an interchange has been rejected

5. Segments Layout

Segment number: 1

due to syntax errors.
DE 0032: This data element is used to identify any underlying agreements which control the exchange of data. Within EANCOM® , the identity of such agreements must start with the letters 'EANCOM', the remaining characters within the data element being filled according to bilateral agreements.

UNB+UNOC:4+5412345678908:14+8798765432106:14+20020102:1000+12345555+++++EANCOMREF 52'

5. Segments Layout

Segment number: 2

UNH	- M	1 - Message header

Function:

To head, identify and specify a message.

Notes:
1. Data element S009/0057 is retained for upward compatibility. The use of S016 and/or S017 is encouraged in preference.
2. The combination of the values carried in data elements 0062 and S009 shall be used to identify uniquely the message within its group (if used) or if not used, within its interchange, for the purpose of acknowledgement.

		EDIFACT	GS1	*	Description
0062	Message reference number	M an..14	**M**		Senders unique message reference. Sequence number of messages in the interchange. DE 0062 in UNT will have the same value. Generated by the sender.
S009	MESSAGE IDENTIFIER	M	**M**		
0065	Message type	M an..6	**M**	*	DIRDEB = Direct debit message
0052	Message version number	M an..3	**M**	*	D = Draft version/UN/EDIFACT Directory
0054	Message release number	M an..3	**M**	*	01B = Release 2001 - B
0051	Controlling agency, coded	M an..3	**M**	*	UN = UN/CEFACT
0057	Association assigned code	C an..6	**R**	*	EAN003 = GS1 version control number (GS1 Permanent Code) Indicates that the message is the EANCOM version 003 of the UNSM Direct Debit.
0110	Code list directory version number	C an..6	**O**		This data element can be used to identify the codelist agreed by the interchange partners, e.g. EAN001 = EANCOM 2002 S4 codelist released on 01.12.2002 by GS1.
0113	Message type sub-function identification	C an..6	**N**		
0068	Common access reference	C an..35	**N**		
S010	STATUS OF THE TRANSFER	C	**N**		
0070	Sequence of transfers	M n..2			
0073	First and last transfer	C a1			
S016	MESSAGE SUBSET IDENTIFICATION	C	**N**		
0115	Message subset identification	M an..14			
0116	Message subset version number	C an..3			
0118	Message subset release number	C an..3			
0051	Controlling agency, coded	C an..3			
S017	MESSAGE IMPLEMENTATION GUIDELINE IDENTIFICATION	C	**N**		
0121	Message implementation guideline identification	M an..14			
0122	Message implementation guideline version number	C an..3			

5. Segments Layout

Segment number: 2

		EDIFACT	GS1	*	Description
0124	Message implementation guideline release number	C an..3			
0051	Controlling agency, coded	C an..3			
S018	SCENARIO IDENTIFICATION	C	**N**		
0127	Scenario identification	M an..14			
0128	Scenario version number	C an..3			
0130	Scenario release number	C an..3			
0051	Controlling agency, coded	C an..3			

Segment Notes:

This segment is used to head, identify and specify a message.
DE's 0065, 0052, 0054 and 0051: Indicate that the message is a UNSM Direct Debit message based on the D. 01B directory.

Example:
UNH+00025+DIRDEB:D:01B:UN:EAN003'

5. Segments Layout

Segment number: 3

BGM	- M	1 - Beginning of message			
Function: To indicate the type and function of a message and to transmit the identifying number.					
		EDIFACT	GS1	*	Description
C002	DOCUMENT/MESSAGE NAME	C	**R**		
1001	Document name code	C an..3	**R**	*	214 = Pre-authorised direct debit(s) 238 = Non-pre-authorised direct debit(s) 243 = Pre-authorised direct debit request(s) 244 = Non-pre-authorised direct debit request(s) 447 = Collection order
1131	Code list identification code	C an..17	**N**		
3055	Code list responsible agency code	C an..3	**N**		
1000	Document name	C an..35	**N**		
C106	DOCUMENT/MESSAGE IDENTIFICATION	C	**R**		
1004	Document identifier	C an..35	**R**		Direct debit number assigned by document sender. The direct debit number will be passed to the party ordering the payment on the debit advice or in the statement for the transaction for reconciliation purposes. For global unique identification of documents Global Document Type Identifier (GDTI) is available.
1056	Version identifier	C an..9	**N**		
1060	Revision identifier	C an..6	**N**		
1225	Message function code	C an..3	**R**	*	7 = Duplicate 9 = Original The message function coded, is a critical data element in this segment. It applies to all data indicated in the message. The following definitions apply for the restricted codes: 7 = Duplicate - The message is a duplicate of a previously generated Direct Debit message. 9 = Original - The original transmission of a Direct Debit message.
4343	Response type code	C an..3	**D**		AB = Message acknowledgement NA = No acknowledgement needed AS = Credit advice and message acknowledgement YW7 = Credit advice (SWIFT Code)
Segment Notes: This segment is used to indicate the type and function of the message and to transmit the identifying number. Example: BGM+214+3452+9+AB'					

5. Segments Layout

Segment number: 4

DTM	- M	1 - Date/time/period			
Function: To specify date, and/or time, or period.					
		EDIFACT	GS1	*	Description
C507	DATE/TIME/PERIOD	M	**M**		
2005	Date or time or period function code qualifier	M an..3	**M**	*	137 = Document/message date/time
2380	Date or time or period value	C an..35	**R**		
2379	Date or time or period format code	C an..3	**R**		102 = CCYYMMDD 203 = CCYYMMDDHHMM

Segment Notes:

This segment is used to specify the date on which the Direct Debit message was created.
DE 2005: Identification of the 'Document/message date/time' (code value 137) is mandatory in an EANCOM message.

Example:
DTM+137:20000124:102'

5. Segments Layout

Segment number: 5

BUS	- C	1 - Business function			
Function: To provide information related to the processing and purpose of a financial message.					
		EDIFACT	GS1	*	Description
C521	BUSINESS FUNCTION	C	**N**		
4027	Business function type code qualifier	M an..3			
4025	Business function code	M an..3			
1131	Code list identification code	C an..17			
3055	Code list responsible agency code	C an..3			
4022	Business description	C an..70			
3279	Geographic area code	C an..3	**R**		DO = Domestic DR = Domestic with regulatory information required IN = International IR = International with regulatory information required YC4 = European (SWIFT Code)
4487	Financial transaction type code	C an..3	**N**		
C551	BANK OPERATION	C	**N**		
4383	Bank operation code	M an..3			
1131	Code list identification code	C an..17			
3055	Code list responsible agency code	C an..3			
4463	Intra-company payment indicator code	C an..3	**N**		

Segment Notes:

This segment is used to indicate the geographical environment of the direct debits contained in the message.

Example:
BUS++DO'

5. Segments Layout

Segment number: 6

SG2	- C	5 -	FII
FII	- M	1 -	Financial institution information

Function:

To identify an account and a related financial institution.

		EDIFACT	GS1	*	Description
3035	Party function code qualifier	M an..3	**M**		AS = Account servicing financial institution HP = Final message recipient MR = Message recipient
C078	ACCOUNT HOLDER IDENTIFICATION	C	**N**		
3194	Account holder identifier	C an..35			
3192	Account holder name	C an..35			
3192	Account holder name	C an..35			
6345	Currency identification code	C an..3			
C088	INSTITUTION IDENTIFICATION	C	**R**		
3433	Institution name code	C an..11	**A**		
1131	Code list identification code	C an..17	**O**		25 = Bank identification
3055	Code list responsible agency code	C an..3	**D**		5 = ISO (International Organization for Standardization)
3434	Institution branch identifier	C an..17	**O**		
1131	Code list identification code	C an..17	**O**		
3055	Code list responsible agency code	C an..3	**D**		5 = ISO (International Organization for Standardization)
3432	Institution name	C an..70	**O**		
3436	Institution branch location name	C an..70	**O**		
3207	Country name code	C an..3	**D**		

Segment Notes:

This segment is used to identify the receiving financial institution of the Direct Debit message.
The preferred way to identify a bank and its branch is in machine readable format using data elements 3433 and 3434. When using C088 it is recommended that if data element 3433 is not used that 3432 be used, and that when data element 3434 is not used that data element 3436 be used.

Example:
FII+MR++KREDBEBB:25:5'
The bank receiving the direct debit message is identified using the bank identification code KREDBEBB (which is maintained by ISO).

5. Segments Layout

Segment number: 7

SG3	- C	3 -	NAD
NAD	- M	1 -	Name and address

Function:

To specify the name/address and their related function, either by C082 only and/or unstructured by C058 or structured by C080 thru 3207.

		EDIFACT	GS1	*	Description
3035	Party function code qualifier	M an..3	**M**		HQ = Owner of account (SWIFT Code) MS = Document/message issuer/sender
C082	PARTY IDENTIFICATION DETAILS	C	**A**		
3039	Party identifier	M an..35	**M**		For identification of parties it is recommended to use GLN - Format n13.
1131	Code list identification code	C an..17	**O**		
3055	Code list responsible agency code	C an..3	**D**		9 = GS1
C058	NAME AND ADDRESS	C	**O**		This composite may only be used to fulfill the requirements of directive 2003/58/EC, article 4.
3124	Name and address description	M an..35	**M**		
3124	Name and address description	C an..35	**O**		
3124	Name and address description	C an..35	**O**		
3124	Name and address description	C an..35	**O**		
3124	Name and address description	C an..35	**O**		
C080	PARTY NAME	C	**D**		
3036	Party name	M an..35	**M**		Party name in clear text.
3036	Party name	C an..35	**O**		
3036	Party name	C an..35	**O**		
3036	Party name	C an..35	**O**		
3036	Party name	C an..35	**O**		
3045	Party name format code	C an..3	**O**		
C059	STREET	C	**D**		
3042	Street and number or post office box identifier	M an..35	**M**		Building Name/Number and Street Name
3042	Street and number or post office box identifier	C an..35	**O**		
3042	Street and number or post office box identifier	C an..35	**O**		
3042	Street and number or post office box identifier	C an..35	**O**		
3164	City name	C an..35	**D**		City/Town name, clear text
C819	COUNTRY SUB-ENTITY DETAILS	C	**D**		
3229	Country sub-entity name code	C an..9	**O**		
1131	Code list identification code	C an..17	**O**		
3055	Code list responsible agency code	C an..3	**O**		

5. Segments Layout

Segment number: 7

		EDIFACT	GS1	*	Description
3228	Country sub-entity name	C an..70	**O**		County/State, clear text.
3251	Postal identification code	C an..17	**D**		Postal code
3207	Country name code	C an..3	**D**		ISO 3166 two alpha country code

Segment Notes:

This segment is used to identify the sender of the direct debit message.

Example:
NAD+MS+5422331123459::9'

Dependency Notes:
The following composites and data elements are only used when a coded name and address can not be used.
The affected composites and data elements are as follows;
C080 - C059 - 3164 - C819 - 3251 - 3207

5. Segments Layout

Segment number: 8

SG4	- M	9999	-	LIN-DTM-RFF-BUS-FCA-SG5-SG6-SG7-SG8-SG9-SG10-SG11
LIN	- M	1	-	Line item

Function:

To identify a line item and configuration.

		EDIFACT	GS1	*	Description
1082	Line item identifier	C an..6	**R**		
1229	Action request/notification description code	C an..3	**N**		
C212	ITEM NUMBER IDENTIFICATION	C	**N**		
7140	Item identifier	C an..35			
7143	Item type identification code	C an..3			
1131	Code list identification code	C an..17			
3055	Code list responsible agency code	C an..3			
C829	SUB-LINE INFORMATION	C	**N**		
5495	Sub-line indicator code	C an..3			
1082	Line item identifier	C an..6			
1222	Configuration level number	C n..2	**N**		
7083	Configuration operation code	C an..3	**N**		

Segment Notes:

This segment is used to identify a line within the direct debit by means of a incrementing unique line number.
If Global Trade Item Numbers are available it is mandatory to use GTIN within the LIN segment.

Note on DE 1082:
Numbering rule: In Part I, section 4.10 there is the recommendation “Within EANCOM® it is recommended that the line numbers used in the first occurrence of data element 1082 in the LIN segment be sequential, starting at 1 for each new message.”

LIN+1'

5. Segments Layout

Segment number: 9

SG4	- M	9999	-	LIN-DTM-RFF-BUS-FCA-SG5-SG6-SG7-SG8-SG9-SG10-SG11
DTM	- C	1	-	Date/time/period

Function:

To specify date, and/or time, or period.

		EDIFACT	GS1	*	Description
C507	DATE/TIME/PERIOD	M	**M**		
2005	Date or time or period function code qualifier	M an..3	**M**	*	203 = Execution date/time, requested 447 = Creditor's requested value date
2380	Date or time or period value	C an..35	**R**		
2379	Date or time or period format code	C an..3	**R**		102 = CCYYMMDD

Segment Notes:

This segment is used to specify a date related to the batch (credit side) of direct debits. This date applies to all individual transactions which do not have an individual date specified.

Example:
DTM+203:20000626:102'

5. Segments Layout

Segment number: 10

SG4	- M	9999	-	LIN-DTM-RFF-BUS-FCA-SG5-SG6-SG7-SG8-SG9-SG10-SG11
RFF	- C	2	-	Reference

Function:

To specify a reference.

		EDIFACT	GS1	*	Description
C506	REFERENCE	M	**M**		
1153	Reference code qualifier	M an..3	**M**		AEK = Payment order number AHL = Creditor's reference number Code value 'AEK' is issued by the debtor to identify the debit entry and is used in subsequent messages in the payment chain.
1154	Reference identifier	C an..70	**R**		
1156	Document line identifier	C an..6	**N**		
4000	Reference version identifier	C an..35	**N**		
1060	Revision identifier	C an..6	**N**		

Segment Notes:

This segment is used to identify the reference number of the credit transaction which results from the message. This number, along with the message number detailed in data element 1004 in the BGM segment, are passed back to the debtor in the debit advice (and multiple debit advice), banking status, and financial messages.

Example:
RFF+AHL:3250527841'

5. Segments Layout

Segment number: 11

SG4	- M	9999 -	LIN-DTM-RFF-BUS-FCA-SG5-SG6-SG7-SG8-SG9-SG10-SG11
BUS	- C	1 -	Business function

Function:

To provide information related to the processing and purpose of a financial message.

		EDIFACT	GS1	*	Description
C521	BUSINESS FUNCTION	C	**D**		
4027	Business function type code qualifier	M an..3	**M**	*	1 = Underlying business function
4025	Business function code	M an..3	**M**		AAN = Business expenses COM = Commission COS = Costs GDS = Purchase and sale of goods INS = Insurance premium INT = Interest LOR = Loan repayment NET = Netting PEN = Pension REN = Rent SCV = Purchase and sale of services SUB = Subscription TAX = Tax payment
1131	Code list identification code	C an..17	**O**		
3055	Code list responsible agency code	C an..3	**D**		17 = S.W.I.F.T.
4022	Business description	C an..70	**O**		
3279	Geographic area code	C an..3	**R**	*	DO = Domestic IN = International YC4 = European (SWIFT Code)
4487	Financial transaction type code	C an..3	**O**		1 = Clean payment
C551	BANK OPERATION	C	**N**		
4383	Bank operation code	M an..3			
1131	Code list identification code	C an..17			
3055	Code list responsible agency code	C an..3			
4463	Intra-company payment indicator code	C an..3	**O**		1 = Intra-company payment

Segment Notes:

This segment is used to identify the characteristics of the transactions detailed in level C of the message.
When this segment is not used the message defaults to a non-intra company domestic clean payment.

Example:
BUS+1:GDS+IN'
The batch of direct debits relate to a clean international payment for the purchase/sale of goods.

5. Segments Layout

Segment number: 12

SG4	- M	9999 -	LIN-DTM-RFF-BUS-FCA-SG5-SG6-SG7-SG8-SG9-SG10-SG11
FCA	- C	1 -	Financial charges allocation

Function:

Description of allocation of charges.

		EDIFACT	GS1	*	Description
4471	Settlement means code	M an..3	**M**	*	13 = All charges borne by payee 14 = Each pay own cost 15 = All charges borne by payor When using code value '15' in this data element it is not recommended that C878 be used.
C878	CHARGE/ALLOWANCE ACCOUNT	C	**D**		Composite data element C878 should only be provided if the account number against which charges are to be allocated are different to the debtor's account (debit account) number.
3434	Institution branch identifier	M an..17	**M**		
1131	Code list identification code	C an..17	**O**		25 = Bank identification 154 = Bank branch sorting identification
3055	Code list responsible agency code	C an..3	**D**		5 = ISO (International Organization for Standardization)
3194	Account holder identifier	C an..35	**O**		If this data element is not used the primary account (i.e. the creditor's bank account) specified in the FII segment should be used.
6345	Currency identification code	C an..3	**O**		ISO 4217 currency code

Segment Notes:

This segment is used to identify the party on which any charges are allocated and the account to which the charges should be directed.

Example:
FCA+15'

5. Segments Layout

Segment number: 13

SG4	- M	9999 -	LIN-DTM-RFF-BUS-FCA-SG5-SG6-SG7-SG8-SG9-SG10-SG11
SG5	- C	1 -	MOA-CUX-DTM-RFF
MOA	- M	1 -	Monetary amount

Function:

To specify a monetary amount.

		EDIFACT	GS1	*	Description
C516	MONETARY AMOUNT	M	**M**		
5025	Monetary amount type code qualifier	M an..3	**M**	*	9 = Amount due/amount payable 57 = Equivalent amount When code 57 (equivalent amount) is used in this data element it is used to instruct a bank to credit an account of the beneficiary by a specified amount of the account currency and to debit the ordering customers account by an equivalent amount in a currency specified in the CUX segment.
5004	Monetary amount	C n..35	**R**		
6345	Currency identification code	C an..3	**D**		ISO 4217 currency code
6343	Currency type code qualifier	C an..3	**N**		
4405	Status description code	C an..3	**N**		

Segment Notes:

This segment is used to specify the total amount for this batch of direct debits, the currency in which it is stated, and an indication whether this amount is the total of the transaction amounts or of bank settlement amounts.

Example:
MOA+9:430000:EUR'

5. Segments Layout

Segment number: 14

SG4	- M	9999 -	LIN-DTM-RFF-BUS-FCA-SG5-SG6-SG7-SG8-SG9-SG10-SG11
SG5	- C	1 -	MOA-CUX-DTM-RFF
CUX	- C	1 -	Currencies

Function:

To specify currencies used in the transaction and relevant details for the rate of exchange.

		EDIFACT	GS1	*	Description
C504	CURRENCY DETAILS	C	**R**		
6347	Currency usage code qualifier	M an..3	**M**	*	2 = Reference currency
6345	Currency identification code	C an..3	**R**		ISO 4217 currency code
6343	Currency type code qualifier	C an..3	**N**		
6348	Currency rate value	C n..4	**D**		This data element is only used when a rate of exchange is provided in data element 5402. When a rate of exchange is provided then at least one currency rate base must be specified.
C504	CURRENCY DETAILS	C	**D**		The second occurrence of this composite is only used if a target currency is being specified.
6347	Currency usage code qualifier	M an..3	**M**	*	3 = Target currency
6345	Currency identification code	C an..3	**R**		ISO 4217 currency code
6343	Currency type code qualifier	C an..3	**N**		
6348	Currency rate value	C n..4	**D**		This data element is only used when a rate of exchange is provided in data element 5402. When a rate of exchange is provided then at least one currency rate base must be specified.
5402	Currency exchange rate	C n..12	**D**		The rate of exchange is only used if a target currency has been identified in the second occurrence of C504.
6341	Exchange rate currency market identifier	C an..3	**O**		

Segment Notes:

This segment is used to specify the currency of the monetary amount detailed in the previous MOA segment.
The CUX segment is only used if code 57 (Equivalent amount) has been used in data element 5025 of the previous MOA segment.
When specifying the Reference and Target currencies for international trade, one occurrence of CUX is all that is required. The reference currency is identified in the first occurrence of composite C504, with the target currency specified in the second occurrence of C504. The rate of exchange between the two is detailed in DE 5402.
The general rule for calculating the rate of exchange is as follows;
Reference Currency multiplied by Rate = Target Currency.

Example:
CUX+2:EUR+3:USD+0.90243'

5. Segments Layout

Segment number: 15

SG4	- M	9999 -	LIN-DTM-RFF-BUS-FCA-SG5-SG6-SG7-SG8-SG9-SG10-SG11
SG5	- C	1 -	MOA-CUX-DTM-RFF
DTM	- C	2 -	Date/time/period

Function:

To specify date, and/or time, or period.

		EDIFACT	GS1	*	Description
C507	DATE/TIME/PERIOD	M	**M**		
2005	Date or time or period function code qualifier	M an..3	**M**	*	134 = Rate of exchange date/time 171 = Reference date/time
2380	Date or time or period value	C an..35	**R**		
2379	Date or time or period format code	C an..3	**R**		102 = CCYYMMDD 203 = CCYYMMDDHHMM

Segment Notes:

This segment is used to specify reference and rate of exchange dates.

Example:
DTM+134:20000121:102'

5. Segments Layout

Segment number: 16

SG4	- M	9999 -	LIN-DTM-RFF-BUS-FCA-SG5-SG6-SG7-SG8-SG9-SG10-SG11
SG5	- C	1 -	MOA-CUX-DTM-RFF
RFF	- C	1 -	Reference

Function:

To specify a reference.

		EDIFACT	GS1	*	Description
C506	REFERENCE	M	**M**		
1153	Reference code qualifier	M an..3	**M**	*	ACX = Banker's acceptance ADB = Matured certificate of deposit ADC = Loan FX = Foreign exchange contract number
1154	Reference identifier	C an..70	**R**		
1156	Document line identifier	C an..6	**N**		
4000	Reference version identifier	C an..35	**N**		
1060	Revision identifier	C an..6	**N**		

Segment Notes:

This segment is used to provide references to other transactions negotiated between the creditor and the creditors bank which will be used to finance the direct debit, e.g. a separate foreign exchange deal.

Example:
RFF+FX:926744'

5. Segments Layout

Segment number: 17

SG4	- M	9999 -	LIN-DTM-RFF-BUS-FCA-SG5-SG6-SG7-SG8-SG9-SG10-SG11
SG6	- M	1 -	FII
FII	- M	1 -	Financial institution information

Function:

To identify an account and a related financial institution.

		EDIFACT	GS1	*	Description
3035	Party function code qualifier	M an..3	**M**		CRB = Creditor's bank (SWIFT Code)
C078	ACCOUNT HOLDER IDENTIFICATION	C	**R**		
3194	Account holder identifier	C an..35	**R**		
3192	Account holder name	C an..35	**O**		
3192	Account holder name	C an..35	**O**		
6345	Currency identification code	C an..3	**O**		ISO 4217 currency code
C088	INSTITUTION IDENTIFICATION	C	**D**		In some countries it is possible to identify within the account number the institution name and branch. Where this is possible the composite C088 will not be required. For international transactions it is recommended that the need for composite C088 should be checked before sending the message.
3433	Institution name code	C an..11	**A**		
1131	Code list identification code	C an..17	**O**		25 = Bank identification
3055	Code list responsible agency code	C an..3	**D**		5 = ISO (International Organization for Standardization)
3434	Institution branch identifier	C an..17	**O**		
1131	Code list identification code	C an..17	**O**		
3055	Code list responsible agency code	C an..3	**D**		5 = ISO (International Organization for Standardization)
3432	Institution name	C an..70	**O**		
3436	Institution branch location name	C an..70	**O**		
3207	Country name code	C an..3	**O**		ISO 3166 country code

Segment Notes:

This segment is used to identify the financial institution and account information related to the creditor.
The preferred way to identify a bank and its branch is in machine readable format using data elements 3433 and 3434. When using C088 it is recommended that if data element 3433 is not used that 3432 be used, and that when data element 3434 is not used that data element 3436 be used.

Example:
FII+CRB+994-3277711:N GEISS'
The ordering customer is identified as being N Geiss with a bank account number of 994-3277711.

5. Segments Layout

Segment number: 18

SG4	- M	9999 -	LIN-DTM-RFF-BUS-FCA-SG5-SG6-SG7-SG8-SG9-SG10-SG11
SG7	- C	3 -	NAD
NAD	- M	1 -	Name and address

Function:

To specify the name/address and their related function, either by C082 only and/or unstructured by C058 or structured by C080 thru 3207.

		EDIFACT	GS1	*	Description
3035	Party function code qualifier	M an..3	**M**		CRE = Creditor (SWIFT Code)
C082	PARTY IDENTIFICATION DETAILS	C	**A**		
3039	Party identifier	M an..35	**M**		For identification of parties it is recommended to use GLN - Format n13.
1131	Code list identification code	C an..17	**O**		
3055	Code list responsible agency code	C an..3	**D**		9 = GS1
C058	NAME AND ADDRESS	C	**O**		This composite may only be used to fulfill the requirements of directive 2003/58/EC, article 4.
3124	Name and address description	M an..35	**M**		
3124	Name and address description	C an..35	**O**		
3124	Name and address description	C an..35	**O**		
3124	Name and address description	C an..35	**O**		
3124	Name and address description	C an..35	**O**		
C080	PARTY NAME	C	**D**		
3036	Party name	M an..35	**M**		Party name in clear text.
3036	Party name	C an..35	**O**		
3036	Party name	C an..35	**O**		
3036	Party name	C an..35	**O**		
3036	Party name	C an..35	**O**		
3045	Party name format code	C an..3	**O**		
C059	STREET	C	**D**		
3042	Street and number or post office box identifier	M an..35	**M**		Building Name/Number and Street Name
3042	Street and number or post office box identifier	C an..35	**O**		
3042	Street and number or post office box identifier	C an..35	**O**		
3042	Street and number or post office box identifier	C an..35	**O**		
3164	City name	C an..35	**D**		City/Town name, clear text
C819	COUNTRY SUB-ENTITY DETAILS	C	**D**		
3229	Country sub-entity name code	C an..9	**O**		
1131	Code list identification code	C an..17	**O**		
3055	Code list responsible agency	C an..3	**O**		

5. Segments Layout

Segment number: 18

		EDIFACT	GS1	*	Description
	code				
3228	Country sub-entity name	C an..70	**O**		County/State, clear text.
3251	Postal identification code	C an..17	**D**		Postal code
3207	Country name code	C an..3	**D**		ISO 3166 two alpha code

Segment Notes:

This segment is used to identify the creditor that will receive the credit transaction.

Example:
NAD+CRE+5422331123459::9'

Dependency Notes:
The following composites and data elements are only used when a coded name and address can not be used.
The affected composites and data elements are as follows;
C080 - C059 - 3164 - C819 - 3251 - 3207

5. Segments Layout

Segment number: 19

SG4	- M	9999 -	LIN-DTM-RFF-BUS-FCA-SG5-SG6-SG7-SG8-SG9-SG10-SG11
SG8	- C	1 -	INP-FTX-DTM
INP	- M	1 -	Parties and instruction

Function:

To specify parties to an instruction, the instruction, or both.

		EDIFACT	GS1	*	Description
C849	PARTIES TO INSTRUCTION	C	**D**		
3301	Enacting party identifier	M an..35	**M**		CRB = Creditor's bank (SWIFT Code)
3285	Instruction receiving party identifier	C an..35	**D**		CRB = Creditor's bank (SWIFT Code) CRE = Creditor (SWIFT Code)
C522	INSTRUCTION	C	**O**		
4403	Instruction type code qualifier	M an..3	**M**		2 = Party instructions
4401	Instruction description code	C an..3	**O**		
1131	Code list identification code	C an..17	**O**		
3055	Code list responsible agency code	C an..3	**D**		
4400	Instruction description	C an..35	**O**		
C850	STATUS OF INSTRUCTION	C	**N**		
4405	Status description code	M an..3			
3036	Party name	C an..35			
1229	Action request/notification description code	C an..3	**N**		

Segment Notes:

This segment is used to identify the party who must carry out an instruction from the creditor, and the party to whom the instruction is intended.
DE's 3301 and 3285: As these data elements are being used to provide coded information it is recommended that their format and length be restricted to an..3.

Example:
INP+CRB:CRE+2:EM'

5. Segments Layout

Segment number: 20

SG4	- M	9999 -	LIN-DTM-RFF-BUS-FCA-SG5-SG6-SG7-SG8-SG9-SG10-SG11
SG8	- C	1 -	INP-FTX-DTM
FTX	- C	1 -	Free text

Function:

To provide free form or coded text information.

		EDIFACT	GS1	*	Description
4451	Text subject code qualifier	M an..3	**M**		AAG = Party instructions
4453	Free text function code	C an..3	**N**		
C107	TEXT REFERENCE	C	**D**		This composite is only used when trading partners have agreed to use mutually defined code values.
4441	Free text value code	M an..17	**M**		
1131	Code list identification code	C an..17	**O**		
3055	Code list responsible agency code	C an..3	**D**		86 = Assigned by party originating the message
C108	TEXT LITERAL	C	**D**		This composite is only used if coded text can not be used.
4440	Free text value	M an..512	**M**		
4440	Free text value	C an..512	**O**		
4440	Free text value	C an..512	**O**		
4440	Free text value	C an..512	**O**		
4440	Free text value	C an..512	**O**		
3453	Language name code	C an..3	**D**		This data element is only used when non coded free text has been provided in data element C108.
4447	Free text format code	C an..3	**N**		

Segment Notes:

This segment is used to provide additional coded or free text instructions to those provided in the INP segment. Use of this segment in free form is not recommended since in most cases it inhibits automatic processing of the direct debit message. Coded references to standard texts is an available functionality which enables automatic processing and reduces transmission and processing overheads. Standard texts should be mutually defined among trading partners and can be used to cover legal and other requirements.

Example:
FTX+AAG+++BEWARE EMBARGO PAYMENTS+EN'

5. Segments Layout

Segment number: 21

SG4	- M	9999 -	LIN-DTM-RFF-BUS-FCA-SG5-SG6-SG7-SG8-SG9-SG10-SG11
SG8	- C	1 -	INP-FTX-DTM
DTM	- C	2 -	Date/time/period

Function:

To specify date, and/or time, or period.

		EDIFACT	GS1	*	Description
C507	DATE/TIME/PERIOD	M	**M**		
2005	Date or time or period function code qualifier	M an..3	**M**		9 = Processing date/time 174 = Advise after date/time 175 = Advise before date/time 176 = Advise completed date/time 177 = Advise on date/time
2380	Date or time or period value	C an..35	**R**		
2379	Date or time or period format code	C an..3	**R**		102 = CCYYMMDD 203 = CCYYMMDDHHMM 713 = YYMMDDHHMM-YYMMDDHHMM

Segment Notes:

This segment is used to specify the dates and or times related to the instructions.

Example:
DTM+175:200206171000:203'
Advise before 10am on the 17th of June 2002.

5. Segments Layout

Segment number: 22

SG4	- M	9999	-	LIN-DTM-RFF-BUS-FCA-SG5-SG6-SG7-SG8-SG9-SG10-SG11
SG9	- C	10	-	GIS-MOA-LOC-NAD-RCS-FTX
GIS	- M	1	-	General indicator

Function:

To transmit a processing indicator.

Notes:
1. This segment will be removed effective with directory D.02B.

		EDIFACT	GS1	*	Description
C529	PROCESSING INDICATOR	M	**M**		
7365	Processing indicator description code	M an..3	**M**	*	10 = Declaration requested 37 = Complete information
1131	Code list identification code	C an..17	**O**		
3055	Code list responsible agency code	C an..3	**O**		
7187	Process type description code	C an..17	**O**		

Segment Notes:

This segment is used to indicate that the information contained in the following segments will be passed on to and processed by the central and regulatory party identified in the NAD segment.
Note: The use of this segment group is subject to national regulations stipulated by regulatory authorities, e.g. Central Bank.

Example:
GIS+10'

5. Segments Layout

Segment number: 23

SG4	- M	9999	-	LIN-DTM-RFF-BUS-FCA-SG5-SG6-SG7-SG8-SG9-SG10-SG11
SG9	- C	10	-	GIS-MOA-LOC-NAD-RCS-FTX
MOA	- C	1	-	Monetary amount

Function:

To specify a monetary amount.

		EDIFACT	GS1	*	Description
C516	MONETARY AMOUNT	M	**M**		
5025	Monetary amount type code qualifier	M an..3	**M**		139 = Total payment amount
5004	Monetary amount	C n..35	**O**		
6345	Currency identification code	C an..3	**O**		
6343	Currency type code qualifier	C an..3	**O**		11 = Payment currency
4405	Status description code	C an..3	**N**		

Segment Notes:

This segment is used to specify monetary amounts which must be reported to the regulatory party identified in the NAD segment.

Example:
MOA+139:430000:EUR:11'

5. Segments Layout

Segment number: 24

SG4	- M	9999 -	LIN-DTM-RFF-BUS-FCA-SG5-SG6-SG7-SG8-SG9-SG10-SG11
SG9	- C	10 -	GIS-MOA-LOC-NAD-RCS-FTX
LOC	- C	2 -	Place/location identification

Function:

To identify a place or a location and/or related locations.

		EDIFACT	GS1	*	Description
3227	Location function code qualifier	M an..3	**M**		27 = Country of origin 28 = Country of destination of goods 39 = Country of production 40 = Country of trading
C517	LOCATION IDENTIFICATION	C	**A**		
3225	Location name code	C an..25	**A**		For country identification see ISO 3166 two alpha code, DE 3207
1131	Code list identification code	C an..17	**O**		
3055	Code list responsible agency code	C an..3	**D**		5 = ISO (International Organization for Standardization) 9 = GS1 DE 3055 must be used if DE 3225 is used and does not contain an UN/LOCODE.
3224	Location name	C an..256	**O**		
C519	RELATED LOCATION ONE IDENTIFICATION	C	**N**		
3223	First related location name code	C an..25			
1131	Code list identification code	C an..17			
3055	Code list responsible agency code	C an..3			
3222	First related location name	C an..70			
C553	RELATED LOCATION TWO IDENTIFICATION	C	**N**		
3233	Second related location name code	C an..25			
1131	Code list identification code	C an..17			
3055	Code list responsible agency code	C an..3			
3232	Second related location name	C an..70			
5479	Relation code	C an..3	**O**		

Segment Notes:

This segment is used to indicate any locations relevant to the regulatory party identified in the NAD segment.

Example:
LOC+39+BE::5'
Goods were produced in Belgium.

5. Segments Layout

Segment number: 25

SG4	- M	9999	-	LIN-DTM-RFF-BUS-FCA-SG5-SG6-SG7-SG8-SG9-SG10-SG11
SG9	- C	10	-	GIS-MOA-LOC-NAD-RCS-FTX
NAD	- C	1	-	Name and address

Function:

To specify the name/address and their related function, either by C082 only and/or unstructured by C058 or structured by C080 thru 3207.

		EDIFACT	GS1	*	Description
3035	Party function code qualifier	M an..3	**M**	*	RA = Central bank or regulatory authority
C082	PARTY IDENTIFICATION DETAILS	C	**A**		
3039	Party identifier	M an..35	**M**		For identification of parties it is recommended to use GLN - Format n13.
1131	Code list identification code	C an..17	**N**		
3055	Code list responsible agency code	C an..3	**R**	*	9 = GS1
C058	NAME AND ADDRESS	C	**O**		This composite may only be used to fulfill the requirements of directive 2003/58/EC, article 4.
3124	Name and address description	M an..35	**M**		
3124	Name and address description	C an..35	**O**		
3124	Name and address description	C an..35	**O**		
3124	Name and address description	C an..35	**O**		
3124	Name and address description	C an..35	**O**		
C080	PARTY NAME	C	**D**		
3036	Party name	M an..35	**M**		Party name in clear text.
3036	Party name	C an..35	**O**		
3036	Party name	C an..35	**O**		
3036	Party name	C an..35	**O**		
3036	Party name	C an..35	**O**		
3045	Party name format code	C an..3	**O**		
C059	STREET	C	**D**		
3042	Street and number or post office box identifier	M an..35	**M**		Building Name/Number and Street
3042	Street and number or post office box identifier	C an..35	**O**		
3042	Street and number or post office box identifier	C an..35	**O**		
3042	Street and number or post office box identifier	C an..35	**O**		
3164	City name	C an..35	**D**		City/town name, clear text.
C819	COUNTRY SUB-ENTITY DETAILS	C	**D**		
3229	Country sub-entity name code	C an..9	**O**		
1131	Code list identification code	C an..17	**O**		
3055	Code list responsible agency	C an..3	**O**		

5. Segments Layout

Segment number: 25

		EDIFACT	GS1	*	Description
	code				
3228	Country sub-entity name	C an..70	**O**		County/State, clear text.
3251	Postal identification code	C an..17	**D**		Postal code.
3207	Country name code	C an..3	**D**		ISO 3166 two alpha code

Segment Notes:

This segment is used to identify the central and regulatory authority specifying the regulatory information detailed in the GIS and FTX segments.

Example:
NAD+RA+5422331123459::9'

Dependency Notes:
The following composites and data elements are only used when a coded name and address can not be used.
The affected composites and data elements are as follows;
C080 - C059 - 3164 - C819 - 3251 - 3207

5. Segments Layout

Segment number: 26

SG4	- M	9999	-	LIN-DTM-RFF-BUS-FCA-SG5-SG6-SG7-SG8-SG9-SG10-SG11
SG9	- C	10	-	GIS-MOA-LOC-NAD-RCS-FTX
RCS	- C	1	-	Requirements and conditions

Function:

To specify sector/subject requirements and conditions.

		EDIFACT	GS1	*	Description
7293	Sector area identification code qualifier	M an..3	**M**	*	25 = Banking sector
C550	REQUIREMENT/CONDITION IDENTIFICATION	C	**A**		
7295	Requirement or condition description identifier	M an..17	**M**		As no EDIFACT code values exist for this data element it is recommended that nationally agreed codes be formulated to identify the requirements and conditions possible due to regulatory requirements.
1131	Code list identification code	C an..17	**O**		
3055	Code list responsible agency code	C an..3	**D**		86 = Assigned by party originating the message
7294	Requirement or condition description	C an..35	**O**		
1229	Action request/notification description code	C an..3	**N**		
3207	Country name code	C an..3	**N**		

Segment Notes:

This segment is used to indicate any requirements and conditions related to the transaction which is being reported to the regulatory authorities.

Example:
RCS+25+AB1::86'

5. Segments Layout

Segment number: 27

SG4	- M	9999 -	LIN-DTM-RFF-BUS-FCA-SG5-SG6-SG7-SG8-SG9-SG10-SG11
SG9	- C	10 -	GIS-MOA-LOC-NAD-RCS-FTX
FTX	- C	10 -	Free text

Function:

To provide free form or coded text information.

		EDIFACT	GS1	*	Description
4451	Text subject code qualifier	M an..3	**M**	*	REG = Regulatory information
4453	Free text function code	C an..3	**N**		
C107	TEXT REFERENCE	C	**D**		This composite is only used when trading partners have agreed to use mutually defined code values.
4441	Free text value code	M an..17	**M**		A code identifying standard text agreed between partners.
1131	Code list identification code	C an..17	**O**		
3055	Code list responsible agency code	C an..3	**D**		
C108	TEXT LITERAL	C	**D**		This composite is only used if coded text can not be used.
4440	Free text value	M an..512	**M**		
4440	Free text value	C an..512	**O**		
4440	Free text value	C an..512	**O**		
4440	Free text value	C an..512	**O**		
4440	Free text value	C an..512	**O**		
3453	Language name code	C an..3	**D**		ISO 639 two alpha code. This data element is only used when non coded free text has been provided in data element C108.
4447	Free text format code	C an..3	**N**		

Segment Notes:

This segment is used to provide free or coded text information required by the regulatory authorities. The form and content of this segment is dependent upon the central bank or regulatory authority's requirements.
Use of this segment in free form is not recommended since in most cases it inhibits automatic processing of the direct debit message. Coded references to standard texts is an available functionality which enables automatic processing and reduces transmission and processing overheads. Standard texts should be mutually defined among trading partners and can be used to cover legal and other requirements.

Example:
FTX+REG+++SUBJECT TO EUROPEAN CENTRAL BANK REGULATIONS'

5. Segments Layout

Segment number: 28

SG4	- M	9999 -	LIN-DTM-RFF-BUS-FCA-SG5-SG6-SG7-SG8-SG9-SG10-SG11
SG10	- C	1 -	PRC-FTX
PRC	- M	1 -	Process identification

Function:

To identify a process.

		EDIFACT	GS1	*	Description
C242	PROCESS TYPE AND DESCRIPTION	C	**R**		
7187	Process type description code	M an..17	**M**	*	11 = Processing of unstructured information The information following this segment is presented in an unstructured format using the following FTX segment.
1131	Code list identification code	C an..17	**N**		
3055	Code list responsible agency code	C an..3	**N**		
7186	Process type description	C an..35	**N**		
7186	Process type description	C an..35	**N**		
C830	PROCESS IDENTIFICATION DETAILS	C	**N**		
7191	Process description code	C an..17			
1131	Code list identification code	C an..17			
3055	Code list responsible agency code	C an..3			
7190	Process description	C an..70			

Segment Notes:

This segment is used to provide processing information for each beneficiary of the debit instructions.

Example:
PRC+11'

5. Segments Layout

Segment number: 29

SG4	- M	9999 -	LIN-DTM-RFF-BUS-FCA-SG5-SG6-SG7-SG8-SG9-SG10-SG11
SG10	- C	1 -	PRC-FTX
FTX	- M	1 -	Free text

Function:

To provide free form or coded text information.

		EDIFACT	GS1	*	Description
4451	Text subject code qualifier	M an..3	**M**		PMD = Payment detail/remittance information
4453	Free text function code	C an..3	**N**		
C107	TEXT REFERENCE	C	**D**		This composite is only used when trading partners have agreed to use mutually defined code values.
4441	Free text value code	M an..17	**M**		A code identifying standard text agreed between trading partners.
1131	Code list identification code	C an..17	**O**		
3055	Code list responsible agency code	C an..3	**D**		
C108	TEXT LITERAL	C	**D**		This composite is only used if coded text can not be used.
4440	Free text value	M an..512	**M**		
4440	Free text value	C an..512	**O**		
4440	Free text value	C an..512	**O**		
4440	Free text value	C an..512	**O**		
4440	Free text value	C an..512	**O**		
3453	Language name code	C an..3	**D**		ISO 639 two alpha code. This data element is only used when non coded free text has been provided in data element C108.
4447	Free text format code	C an..3	**N**		

Segment Notes:

This segment is used to provide free or coded text information related to the processing of the payment.
Use of this segment in free form is not recommended since in most cases it inhibits automatic processing of the direct debit message. Coded references to standard texts is an available functionality which enables automatic processing and reduces transmission and processing overheads. Standard texts should be mutually defined among trading partners and can be used to cover legal and other requirements.

Example:
FTX+PMD+++EMBARGO PAYMENT RESTRICTIONS IN FORCE+EN'

5. Segments Layout

Segment number: 30

SG4	- M	9999	-	LIN-DTM-RFF-BUS-FCA-SG5-SG6-SG7-SG8-SG9-SG10-SG11
SG11	- M	99999	-	SEQ-MOA-DTM-RFF-FCA-SG12-SG13-SG14-SG15-SG16
SEQ	- M	1	-	Sequence details

Function:

To provide details relating to the sequence.

		EDIFACT	GS1	*	Description
1229	Action request/notification description code	C an..3	**N**		
C286	SEQUENCE INFORMATION	C	**R**		
1050	Sequence position identifier	M an..10	**M**		
1159	Sequence identifier source code	C an..3	**N**		
1131	Code list identification code	C an..17	**N**		
3055	Code list responsible agency code	C an..3	**N**		

Segment Notes:

This segment is used to identify the start of the credit side of the transaction (level C) by means of a sequence number within the current line number. The sequence number should be incremented by one for each occurrence of a new line number (in LIN segment).

Example:
SEQ++1'

5. Segments Layout

Segment number: 31

SG4	- M	9999 -	LIN-DTM-RFF-BUS-FCA-SG5-SG6-SG7-SG8-SG9-SG10-SG11
SG11	- M	99999 -	SEQ-MOA-DTM-RFF-FCA-SG12-SG13-SG14-SG15-SG16
MOA	- M	1 -	Monetary amount

Function:

To specify a monetary amount.

		EDIFACT	GS1	*	Description
C516	MONETARY AMOUNT	M	**M**		
5025	Monetary amount type code qualifier	M an..3	**M**	*	9 = Amount due/amount payable 57 = Equivalent amount
5004	Monetary amount	C n..35	**R**		
6345	Currency identification code	C an..3	**D**		ISO 4217 three alpha code
6343	Currency type code qualifier	C an..3	**N**		
4405	Status description code	C an..3	**N**		

Segment Notes:

This segment is used to specify the payment amount for the credit instruction.
DE 5025 and 5345: When code value '9' is used in data element 5025 then the currency code specified in data element 5345 must be the same as that specified in DE 6345 of the MOA segment in segment group 5.

Example:
MOA+9:430000:EUR'

5. Segments Layout

Segment number: 32

SG4	- M	9999 -	LIN-DTM-RFF-BUS-FCA-SG5-SG6-SG7-SG8-SG9-SG10-SG11
SG11	- M	99999 -	SEQ-MOA-DTM-RFF-FCA-SG12-SG13-SG14-SG15-SG16
DTM	- C	1 -	Date/time/period

Function:

To specify date, and/or time, or period.

		EDIFACT	GS1	*	Description
C507	DATE/TIME/PERIOD	M	**M**		
2005	Date or time or period function code qualifier	M an..3	**M**	*	434 = Maturity date 448 = Referenced item creation date XF2 = Date of issue and maturity (SWIFT Code)
2380	Date or time or period value	C an..35	**R**		
2379	Date or time or period format code	C an..3	**R**		102 = CCYYMMDD 203 = CCYYMMDDHHMM

Segment Notes:

This segment is used to specify dates relevant to the debtor's side of the direct debit transaction.

Example:
DTM+XF2:20000126:102'

5. Segments Layout

Segment number: 33

SG4	- M	9999 -	LIN-DTM-RFF-BUS-FCA-SG5-SG6-SG7-SG8-SG9-SG10-SG11
SG11	- M	99999 -	SEQ-MOA-DTM-RFF-FCA-SG12-SG13-SG14-SG15-SG16
RFF	- C	3 -	Reference

Function:

To specify a reference.

		EDIFACT	GS1	*	Description
C506	REFERENCE	M	**M**		
1153	Reference code qualifier	M an..3	**M**		AHM = Debtor's reference number ANZ = Direct debit reference AOA = Documentary payment reference CR = Customer reference number PQ = Payment reference RA = Remittance advice number
1154	Reference identifier	C an..70	**R**		
1156	Document line identifier	C an..6	**N**		
4000	Reference version identifier	C an..35	**N**		
1060	Revision identifier	C an..6	**N**		

Segment Notes:

This segment is used to identify the individual direct debit transaction in a way which is meaningful to the creditor and the debtor.

Example:
RFF+ANZ:43155836'

5. Segments Layout

Segment number: 34

SG4	- M	9999 -	LIN-DTM-RFF-BUS-FCA-SG5-SG6-SG7-SG8-SG9-SG10-SG11
SG11	- M	99999 -	SEQ-MOA-DTM-RFF-FCA-SG12-SG13-SG14-SG15-SG16
FCA	- C	1 -	Financial charges allocation

Function:

Description of allocation of charges.

		EDIFACT	GS1	*	Description
4471	Settlement means code	M an..3	**M**	*	13 = All charges borne by payee 14 = Each pay own cost 15 = All charges borne by payor When using code value '15' in this data element it is not recommended that C878 be used.
C878	CHARGE/ALLOWANCE ACCOUNT	C	**O**		
3434	Institution branch identifier	M an..17	**M**		
1131	Code list identification code	C an..17	**O**		25 = Bank identification 154 = Bank branch sorting identification
3055	Code list responsible agency code	C an..3	**D**		5 = ISO (International Organization for Standardization)
3194	Account holder identifier	C an..35	**O**		If this data element is not used the primary account (i.e. the creditor's bank account) specified in the FII segment (group 6) should be used.
6345	Currency identification code	C an..3	**O**		ISO 4217 three alpha

Segment Notes:

This segment is used to identify the basis on which any charges are allocated and the account (of the debtor) to which the charges should be directed.
This segment must not be used if the charge allocation details have already been provided in the FCA segment in group 4.

Example:
FCA+15+DRESDEFF666:25:5'

5. Segments Layout

Segment number: 35

SG4	- M	9999 -	LIN-DTM-RFF-BUS-FCA-SG5-SG6-SG7-SG8-SG9-SG10-SG11
SG11	- M	99999 -	SEQ-MOA-DTM-RFF-FCA-SG12-SG13-SG14-SG15-SG16
SG12	- C	3 -	FII
FII	- M	1 -	Financial institution information

Function:

To identify an account and a related financial institution.

		EDIFACT	GS1	*	Description
3035	Party function code qualifier	M an..3	**M**		DBB = Debtor's bank (SWIFT Code)
C078	ACCOUNT HOLDER IDENTIFICATION	C	**R**		
3194	Account holder identifier	C an..35	**R**		Beneficiary account number.
3192	Account holder name	C an..35	**O**		
3192	Account holder name	C an..35	**O**		
6345	Currency identification code	C an..3	**O**		ISO 4217 three alpha
C088	INSTITUTION IDENTIFICATION	C	**D**		In some countries it is possible to identify within the account number the institution name and branch. Where this is possible the composite C088 will not be required. For international transactions it is recommended that the need for composite C088 should be checked before sending the message.
3433	Institution name code	C an..11	**A**		
1131	Code list identification code	C an..17	**O**		25 = Bank identification
3055	Code list responsible agency code	C an..3	**D**		5 = ISO (International Organization for Standardization)
3434	Institution branch identifier	C an..17	**O**		
1131	Code list identification code	C an..17	**O**		
3055	Code list responsible agency code	C an..3	**D**		5 = ISO (International Organization for Standardization)
3432	Institution name	C an..70	**O**		
3436	Institution branch location name	C an..70	**O**		
3207	Country name code	C an..3	**O**		ISO 3166 two alpha code

Segment Notes:

This segment is used to identify the financial institution and account number of the debtor.
The preferred way to identify a bank and its branch is in machine readable format using data elements 3433 and 3434. When using C088 it is recommended that if data element 3433 is not used that 3432 be used, and that when data element 3434 is not used that data element 3436 be used.

Example:
FII+DBB+994-3277711:N GEISS'
The debtor's bank account details is identified as being N Geiss with a bank account number of 994-3277711. In this example the identity of the bank is contained in the account number.

5. Segments Layout

Segment number: 36

SG4	- M	9999 -	LIN-DTM-RFF-BUS-FCA-SG5-SG6-SG7-SG8-SG9-SG10-SG11
SG11	- M	99999 -	SEQ-MOA-DTM-RFF-FCA-SG12-SG13-SG14-SG15-SG16
SG13	- C	3 -	NAD
NAD	- M	1 -	Name and address

Function:

To specify the name/address and their related function, either by C082 only and/or unstructured by C058 or structured by C080 thru 3207.

		EDIFACT	GS1	*	Description
3035	Party function code qualifier	M an..3	**M**		BY = Buyer HX = Debtor (SWIFT Code) PL = Payor P1 = Contact party 1 SU = Supplier
C082	PARTY IDENTIFICATION DETAILS	C	**A**		
3039	Party identifier	M an..35	**M**		For identification of parties it is recommended to use GLN - Format n13.
1131	Code list identification code	C an..17	**O**		
3055	Code list responsible agency code	C an..3	**D**		9 = GS1
C058	NAME AND ADDRESS	C	**O**		This composite may only be used to fulfill the requirements of directive 2003/58/EC, article 4.
3124	Name and address description	M an..35	**M**		
3124	Name and address description	C an..35	**O**		
3124	Name and address description	C an..35	**O**		
3124	Name and address description	C an..35	**O**		
3124	Name and address description	C an..35	**O**		
C080	PARTY NAME	C	**D**		
3036	Party name	M an..35	**M**		Party name in clear text.
3036	Party name	C an..35	**O**		
3036	Party name	C an..35	**O**		
3036	Party name	C an..35	**O**		
3036	Party name	C an..35	**O**		
3045	Party name format code	C an..3	**O**		
C059	STREET	C	**D**		
3042	Street and number or post office box identifier	M an..35	**M**		Building Name/Number and Street Name
3042	Street and number or post office box identifier	C an..35	**O**		
3042	Street and number or post office box identifier	C an..35	**O**		
3042	Street and number or post office box identifier	C an..35	**O**		
3164	City name	C an..35	**D**		City/Town name, clear text
C819	COUNTRY SUB-ENTITY	C	**D**		

5. Segments Layout

Segment number: 36

		EDIFACT	GS1	*	Description
	DETAILS				
3229	Country sub-entity name code	C an..9	**O**		
1131	Code list identification code	C an..17	**O**		
3055	Code list responsible agency code	C an..3	**O**		
3228	Country sub-entity name	C an..70	**O**		County/State, clear text.
3251	Postal identification code	C an..17	**D**		Postal code
3207	Country name code	C an..3	**D**		ISO 3166 two alpha code

Segment Notes:

This segment is used to identify the debtor in the direct debit transactions and is passed on unchanged through the banking chain.

Example:
NAD+HX+5412345000020::9'
The debtoris identified using the Global Location Number GLN 5412345000020.

Dependency Notes:
The following composites and data elements are only used when a coded name and address can not be used.
The affected composites and data elements are as follows;
C080 - C059 - 3164 - C819 - 3251 - 3207

5. Segments Layout

Segment number: 37

SG4	- M	9999 -	LIN-DTM-RFF-BUS-FCA-SG5-SG6-SG7-SG8-SG9-SG10-SG11
SG11	- M	99999 -	SEQ-MOA-DTM-RFF-FCA-SG12-SG13-SG14-SG15-SG16
SG14	- C	3 -	INP-FTX-DTM
INP	- M	1 -	Parties and instruction

Function:

To specify parties to an instruction, the instruction, or both.

		EDIFACT	GS1	*	Description
C849	PARTIES TO INSTRUCTION	C	**A**		
3301	Enacting party identifier	M an..35	**M**		8 = Debtor's bank
3285	Instruction receiving party identifier	C an..35	**O**		5 = Contact party 1 15 = Debtor
C522	INSTRUCTION	C	**O**		
4403	Instruction type code qualifier	M an..3	**M**		2 = Party instructions
4401	Instruction description code	C an..3	**O**		AD = Advise AP = Advise by phone AJ = Advise by fax (SWIFT Code) EX = Expedite
1131	Code list identification code	C an..17	**N**		
3055	Code list responsible agency code	C an..3	**O**		
4400	Instruction description	C an..35	**O**		
C850	STATUS OF INSTRUCTION	C	**N**		
4405	Status description code	M an..3			
3036	Party name	C an..35			
1229	Action request/notification description code	C an..3	**N**		

Segment Notes:

This segment is used to identify the party who must carry out an instruction from the creditor, and the party to whom the instruction is intended.
This segment should not be used if the INP segment in segment group 8 was used.
DE's 3301 and 3285: As these data elements are being used to provide coded information it is recommended that their format and length be restricted to an..3.

Example:
INP+8+2:AD'

5. Segments Layout

Segment number: 38

SG4	- M	9999 -	LIN-DTM-RFF-BUS-FCA-SG5-SG6-SG7-SG8-SG9-SG10-SG11
SG11	- M	99999 -	SEQ-MOA-DTM-RFF-FCA-SG12-SG13-SG14-SG15-SG16
SG14	- C	3 -	INP-FTX-DTM
FTX	- C	1 -	Free text

Function:

To provide free form or coded text information.

		EDIFACT	GS1	*	Description
4451	Text subject code qualifier	M an..3	**M**		AAG = Party instructions
4453	Free text function code	C an..3	**N**		
C107	TEXT REFERENCE	C	**D**		This composite is only used when trading partners have agreed to use mutually defined code values.
4441	Free text value code	M an..17	**M**		Coded reference to standard text between partners.
1131	Code list identification code	C an..17	**O**		
3055	Code list responsible agency code	C an..3	**D**		86 = Assigned by party originating the message
C108	TEXT LITERAL	C	**D**		This composite is only used if coded text can not be used.
4440	Free text value	M an..512	**M**		
4440	Free text value	C an..512	**O**		
4440	Free text value	C an..512	**O**		
4440	Free text value	C an..512	**O**		
4440	Free text value	C an..512	**O**		
3453	Language name code	C an..3	**D**		ISO 639 two alpha code. This data element is only used when non coded free text has been provided in data element C108.
4447	Free text format code	C an..3	**N**		

Segment Notes:

This segment is used to provide additional coded or free text instructions to those provided in the INP segment. Use of this segment in free form is not recommended since in most cases it inhibits automatic processing of the direct debit message. Coded references to standard texts is an available functionality which enables automatic processing and reduces transmission and processing overheads. Standard texts should be mutually defined among trading partners and can be used to cover legal and other requirements.

Example:
FTX+AAG+++EMBARGO REGULATIONS+EN'

5. Segments Layout

Segment number: 39

SG4	- M	9999	-	LIN-DTM-RFF-BUS-FCA-SG5-SG6-SG7-SG8-SG9-SG10-SG11
SG11	- M	99999	-	SEQ-MOA-DTM-RFF-FCA-SG12-SG13-SG14-SG15-SG16
SG14	- C	3	-	INP-FTX-DTM
DTM	- C	2	-	Date/time/period

Function:

To specify date, and/or time, or period.

		EDIFACT	GS1	*	Description
C507	DATE/TIME/PERIOD	M	**M**		
2005	Date or time or period function code qualifier	M an..3	**M**		9 = Processing date/time 174 = Advise after date/time 175 = Advise before date/time 176 = Advise completed date/time 177 = Advise on date/time
2380	Date or time or period value	C an..35	**R**		
2379	Date or time or period format code	C an..3	**R**		102 = CCYYMMDD 203 = CCYYMMDDHHMM 713 = YYMMDDHHMM-YYMMDDHHMM

Segment Notes:

This segment is used to specify the earliest and latest dates by which the instructions must be carried out.

Example:
DTM+175:200006171000:203'
Advise before 10am on the 17th of June 2000.

5. Segments Layout

Segment number: 40

SG4	- M	9999	-	LIN-DTM-RFF-BUS-FCA-SG5-SG6-SG7-SG8-SG9-SG10-SG11
SG11	- M	99999	-	SEQ-MOA-DTM-RFF-FCA-SG12-SG13-SG14-SG15-SG16
SG15	- C	10	-	GIS-MOA-LOC-NAD-RCS-FTX
GIS	- M	1	-	General indicator

Function:

To transmit a processing indicator.

Notes:
1. This segment will be removed effective with directory D.02B.

		EDIFACT	GS1	*	Description
C529	PROCESSING INDICATOR	M	**M**		
7365	Processing indicator description code	M an..3	**M**	*	10 = Declaration requested
1131	Code list identification code	C an..17	**N**		
3055	Code list responsible agency code	C an..3	**N**		
7187	Process type description code	C an..17	**N**		

Segment Notes:

This segment is used to indicate that the information contained in the following segments will be passed on to and processed by the central and regulatory party identified in the NAD segment.
This segment should not be used if the GIS segment in segment group 9 has already been used.
Note: The use of this segment group is subject to domestic regulations stipulated by regulatory authorities, e.g. Central Bank.

Example:
GIS+10'

5. Segments Layout

Segment number: 41

SG4	- M	9999	-	LIN-DTM-RFF-BUS-FCA-SG5-SG6-SG7-SG8-SG9-SG10-SG11
SG11	- M	99999	-	SEQ-MOA-DTM-RFF-FCA-SG12-SG13-SG14-SG15-SG16
SG15	- C	10	-	GIS-MOA-LOC-NAD-RCS-FTX
MOA	- C	1	-	Monetary amount

Function:

To specify a monetary amount.

		EDIFACT	GS1	*	Description
C516	MONETARY AMOUNT	M	**M**		
5025	Monetary amount type code qualifier	M an..3	**M**		9 = Amount due/amount payable
5004	Monetary amount	C n..35	**R**		
6345	Currency identification code	C an..3	**O**		ISO 4217 three alpha code
6343	Currency type code qualifier	C an..3	**O**		11 = Payment currency
4405	Status description code	C an..3	**N**		

Segment Notes:

This segment is used to specify monetary amounts which must be reported to the regulatory party identified in the NAD segment.

Example:
MOA+9:430000:EUR:11'

5. Segments Layout

Segment number: 42

SG4	- M	9999 -	LIN-DTM-RFF-BUS-FCA-SG5-SG6-SG7-SG8-SG9-SG10-SG11
SG11	- M	99999 -	SEQ-MOA-DTM-RFF-FCA-SG12-SG13-SG14-SG15-SG16
SG15	- C	10 -	GIS-MOA-LOC-NAD-RCS-FTX
LOC	- C	2 -	Place/location identification

Function:

To identify a place or a location and/or related locations.

		EDIFACT	GS1	*	Description
3227	Location function code qualifier	M an..3	**M**		27 = Country of origin 28 = Country of destination of goods 39 = Country of production 40 = Country of trading
C517	LOCATION IDENTIFICATION	C	**A**		
3225	Location name code	C an..25	**A**		For country identification see ISO 3166 two alpha code, DE 3207.
1131	Code list identification code	C an..17	**O**		
3055	Code list responsible agency code	C an..3	**D**		5 = ISO (International Organization for Standardization) DE 3055 must be used if DE 3225 is used and does not contain an UN/LOCODE.
3224	Location name	C an..256	**O**		
C519	RELATED LOCATION ONE IDENTIFICATION	C	**N**		
3223	First related location name code	C an..25			
1131	Code list identification code	C an..17			
3055	Code list responsible agency code	C an..3			
3222	First related location name	C an..70			
C553	RELATED LOCATION TWO IDENTIFICATION	C	**O**		
3233	Second related location name code	C an..25	**O**		
1131	Code list identification code	C an..17	**O**		
3055	Code list responsible agency code	C an..3	**D**		DE 3055 must be used if DE 3233 is used and does not contain an UN/LOCODE.
3232	Second related location name	C an..70	**O**		
5479	Relation code	C an..3	**N**		

Segment Notes:

This segment is used to indicate any locations relevant to the regulatory party identified in the NAD segment.

Example:
LOC+39+BE'
Goods were produced in Belgium.

5. Segments Layout

Segment number: 43

SG4	- M	9999 -	LIN-DTM-RFF-BUS-FCA-SG5-SG6-SG7-SG8-SG9-SG10-SG11
SG11	- M	99999 -	SEQ-MOA-DTM-RFF-FCA-SG12-SG13-SG14-SG15-SG16
SG15	- C	10 -	GIS-MOA-LOC-NAD-RCS-FTX
NAD	- C	1 -	Name and address

Function:

To specify the name/address and their related function, either by C082 only and/or unstructured by C058 or structured by C080 thru 3207.

		EDIFACT	GS1	*	Description
3035	Party function code qualifier	M an..3	**M**	*	RA = Central bank or regulatory authority
C082	PARTY IDENTIFICATION DETAILS	C	**A**		
3039	Party identifier	M an..35	**M**		For identification of parties it is recommended to use GLN - Format n13.
1131	Code list identification code	C an..17	**O**		
3055	Code list responsible agency code	C an..3	**D**		9 = GS1
C058	NAME AND ADDRESS	C	**O**		This composite may only be used to fulfill the requirements of directive 2003/58/EC, article 4.
3124	Name and address description	M an..35	**M**		
3124	Name and address description	C an..35	**O**		
3124	Name and address description	C an..35	**O**		
3124	Name and address description	C an..35	**O**		
3124	Name and address description	C an..35	**O**		
C080	PARTY NAME	C	**D**		
3036	Party name	M an..35	**M**		Party name in clear text.
3036	Party name	C an..35	**O**		
3036	Party name	C an..35	**O**		
3036	Party name	C an..35	**O**		
3036	Party name	C an..35	**O**		
3045	Party name format code	C an..3	**O**		
C059	STREET	C	**D**		
3042	Street and number or post office box identifier	M an..35	**M**		Building Name/Number and Street
3042	Street and number or post office box identifier	C an..35	**O**		
3042	Street and number or post office box identifier	C an..35	**O**		
3042	Street and number or post office box identifier	C an..35	**O**		
3164	City name	C an..35	**D**		City/town name, clear text.
C819	COUNTRY SUB-ENTITY DETAILS	C	**D**		
3229	Country sub-entity name code	C an..9	**O**		
1131	Code list identification code	C an..17	**O**		

5. Segments Layout

Segment number: 43

		EDIFACT	GS1	*	Description
3055	Code list responsible agency code	C an..3	**O**		
3228	Country sub-entity name	C an..70	**O**		County/State, clear text.
3251	Postal identification code	C an..17	**D**		Postal code.
3207	Country name code	C an..3	**D**		ISO 3166 two alpha code

Segment Notes:

This segment is used to identify the central and regulatory authority specifying the regulatory information detailed in the GIS and FTX segments.

Example:
NAD+RA+5422331123459::9'

Dependency Notes:
The following composites and data elements are only used when a coded name and address can not be used.
The affected composites and data elements are as follows;
C080 - C059 - 3164 - C819 - 3251 - 3207

5. Segments Layout

Segment number: 44

SG4	- M	9999 -	LIN-DTM-RFF-BUS-FCA-SG5-SG6-SG7-SG8-SG9-SG10-SG11
SG11	- M	99999 -	SEQ-MOA-DTM-RFF-FCA-SG12-SG13-SG14-SG15-SG16
SG15	- C	10 -	GIS-MOA-LOC-NAD-RCS-FTX
RCS	- C	1 -	Requirements and conditions

Function:

To specify sector/subject requirements and conditions.

		EDIFACT	GS1	*	Description
7293	Sector area identification code qualifier	M an..3	**M**	*	25 = Banking sector
C550	REQUIREMENT/CONDITION IDENTIFICATION	C	**A**		
7295	Requirement or condition description identifier	M an..17	**M**		As no EDIFACT code values exist for this data element it is recommended that nationally agreed codes be formulated to identify the requirements and conditions possible due to regulatory requirements.
1131	Code list identification code	C an..17	**O**		
3055	Code list responsible agency code	C an..3	**D**		86 = Assigned by party originating the message
7294	Requirement or condition description	C an..35	**O**		
1229	Action request/notification description code	C an..3	**N**		
3207	Country name code	C an..3	**N**		

Segment Notes:

This segment is used to indicate any requirements and conditions related to the transaction which is being reported to the regulatory authorities.

Example:
RCS+25+AB1::86'
Code assigned by the message sender indicating that the requirements and conditions relate to regulatory requirements to report the payment of amount in excess of a certain amount.

5. Segments Layout

Segment number: 45

SG4	- M	9999 -	LIN-DTM-RFF-BUS-FCA-SG5-SG6-SG7-SG8-SG9-SG10-SG11
SG11	- M	99999 -	SEQ-MOA-DTM-RFF-FCA-SG12-SG13-SG14-SG15-SG16
SG15	- C	10 -	GIS-MOA-LOC-NAD-RCS-FTX
FTX	- C	10 -	Free text

Function:

To provide free form or coded text information.

		EDIFACT	GS1	*	Description
4451	Text subject code qualifier	M an..3	**M**	*	REG = Regulatory information
4453	Free text function code	C an..3	**N**		
C107	TEXT REFERENCE	C	**D**		This composite is only used when trading partners have agreed to use mutually defined code values.
4441	Free text value code	M an..17	**M**		A code identifying standard text agreed between partners.
1131	Code list identification code	C an..17	**O**		
3055	Code list responsible agency code	C an..3	**D**		
C108	TEXT LITERAL	C	**D**		This composite is only used if coded text can not be used.
4440	Free text value	M an..512	**M**		
4440	Free text value	C an..512	**O**		
4440	Free text value	C an..512	**O**		
4440	Free text value	C an..512	**O**		
4440	Free text value	C an..512	**O**		
3453	Language name code	C an..3	**D**		ISO 639 two alpha code. This data element is only used when non coded free text has been provided in data element C108.
4447	Free text format code	C an..3	**N**		

Segment Notes:

This segment is used to provide free or coded text information required by the regulatory authorities. The form and content of this segment is dependent upon the central bank or regulatory authority's requirements.
Use of this segment in free form is not recommended since in most cases it inhibits automatic processing of the direct debit message. Coded references to standard texts is an available functionality which enables automatic processing and reduces transmission and processing overheads. Standard texts should be mutually defined among trading partners and can be used to cover legal and other requirements.

Example:
FTX+REG+++SUBJECT TO NATIONAL JURISDICTION'

5. Segments Layout

Segment number: 46

SG4	- M	9999 -	LIN-DTM-RFF-BUS-FCA-SG5-SG6-SG7-SG8-SG9-SG10-SG11
SG11	- M	99999 -	SEQ-MOA-DTM-RFF-FCA-SG12-SG13-SG14-SG15-SG16
SG16	- C	1 -	PRC-FTX-SG17-SG23
PRC	- M	1 -	Process identification

Function:

To identify a process.

		EDIFACT	GS1	*	Description
C242	PROCESS TYPE AND DESCRIPTION	C	**R**		
7187	Process type description code	M an..17	**M**	*	8 = Processing of structured information 9 = Processing of identical information in structured and unstructured form 10 = Processing of different information in structured and unstructured form 11 = Processing of unstructured information 8 - The information following this segment is presented in a structured format using segments such as the DOC and MOA in segment group 17. 9 - The information following this segment is presented in both an unstructured format, and has the same content and meaning, using the following FTX segment, and a structured format using segments such as the DOC and MOA in segment group 17. This code is required so as the receiving bank can decide which format (EDIFACT or SWIFT) to use when transmitting the information to the beneficiary's bank. 11 - The information following this segment is presented in an unstructured format using the following FTX segment.
1131	Code list identification code	C an..17	**O**		
3055	Code list responsible agency code	C an..3	**O**		
7186	Process type description	C an..35	**O**		
7186	Process type description	C an..35	**O**		
C830	PROCESS IDENTIFICATION DETAILS	C	**N**		
7191	Process description code	C an..17			
1131	Code list identification code	C an..17			
3055	Code list responsible agency code	C an..3			
7190	Process description	C an..70			

Segment Notes:

This segment is used to provide processing information related to an individual direct debit transaction.
It should be noted that information sent in groups 16 through 23 is generated by the debtor and is simply forwarded to the creditor via the intermediary bank(s) without amendment.

Example:
PRC+8'

5. Segments Layout

Segment number: 47

SG4	- M	9999 -	LIN-DTM-RFF-BUS-FCA-SG5-SG6-SG7-SG8-SG9-SG10-SG11
SG11	- M	99999 -	SEQ-MOA-DTM-RFF-FCA-SG12-SG13-SG14-SG15-SG16
SG16	- C	1 -	PRC-FTX-SG17-SG23
FTX	- C	5 -	Free text

Function:

To provide free form or coded text information.

		EDIFACT	GS1	*	Description
4451	Text subject code qualifier	M an..3	**M**		PMD = Payment detail/remittance information
4453	Free text function code	C an..3	**N**		
C107	TEXT REFERENCE	C	**D**		This composite is only used when trading partners have agreed to use mutually defined code values.
4441	Free text value code	M an..17	**M**		A code identifying standard text agreed between trading partners.
1131	Code list identification code	C an..17	**O**		
3055	Code list responsible agency code	C an..3	**D**		
C108	TEXT LITERAL	C	**D**		This composite is only used if coded text can not be used.
4440	Free text value	M an..512	**M**		
4440	Free text value	C an..512	**O**		
4440	Free text value	C an..512	**O**		
4440	Free text value	C an..512	**O**		
4440	Free text value	C an..512	**O**		
3453	Language name code	C an..3	**D**		ISO 639 two alpha code. This data element is only used when non coded free text has been provided in data element C108.
4447	Free text format code	C an..3	**N**		

Segment Notes:

This segment is used to provide free or coded text information related to the processing of the direct debit transaction.
Use of this segment in free form is not recommended since in most cases it inhibits automatic processing of the direct debit message. Coded references to standard texts is an available functionality which enables automatic processing and reduces transmission and processing overheads. Standard texts should be mutually defined among trading partners and can be used to cover legal and other requirements.

Example:
FTX+PMD+++LIMITED LIABILITY+EN'

5. Segments Layout

Segment number: 48

SG4	- M	9999 -	LIN-DTM-RFF-BUS-FCA-SG5-SG6-SG7-SG8-SG9-SG10-SG11
SG11	- M	99999 -	SEQ-MOA-DTM-RFF-FCA-SG12-SG13-SG14-SG15-SG16
SG16	- C	1 -	PRC-FTX-SG17-SG23
SG17	- C	9999 -	DOC-MOA-DTM-RFF-NAD-SG18-SG19-SG20
DOC	- M	1 -	Document/message details

Function:

To identify documents and details directly related to it.

		EDIFACT	GS1	*	Description
C002	DOCUMENT/MESSAGE NAME	M	**M**		
1001	Document name code	C an..3	**R**		82 = Metered services invoice 83 = Credit note related to financial adjustments 84 = Debit note related to financial adjustments 380 = Commercial invoice 381 = Credit note - goods and services 383 = Debit note - goods and services 385 = Consolidated invoice 386 = Prepayment invoice 389 = Self-billed invoice 390 = Delcredere invoice
1131	Code list identification code	C an..17	**O**		
3055	Code list responsible agency code	C an..3	**D**		
1000	Document name	C an..35	**N**		
C503	DOCUMENT/MESSAGE DETAILS	C	**R**		
1004	Document identifier	C an..35	**R**		
1373	Document status code	C an..3	**O**		1 = Accepted 2 = Accompanying goods 4 = To arrive by separate EDI message 6 = To arrive by manual means
1366	Document source description	C an..70	**N**		
3453	Language name code	C an..3	**O**		ISO 639 two alpha code.
1056	Version identifier	C an..9	**N**		
1060	Revision identifier	C an..6	**N**		
3153	Communication medium type code	C an..3	**N**		
1220	Document copies required quantity	C n..2	**N**		
1218	Document originals required quantity	C n..2	**N**		

Segment Notes:

This segment is used to provide details of the documents, e.g. a group of invoices, to which an individual direct debit transaction refers.

Example:

5. Segments Layout

Segment number: 48

DOC+380+43534'

5. Segments Layout

Segment number: 49

SG4	- M	9999 -	LIN-DTM-RFF-BUS-FCA-SG5-SG6-SG7-SG8-SG9-SG10-SG11
SG11	- M	99999 -	SEQ-MOA-DTM-RFF-FCA-SG12-SG13-SG14-SG15-SG16
SG16	- C	1 -	PRC-FTX-SG17-SG23
SG17	- C	9999 -	DOC-MOA-DTM-RFF-NAD-SG18-SG19-SG20
MOA	- C	5 -	Monetary amount

Function:

To specify a monetary amount.

		EDIFACT	GS1	*	Description
C516	MONETARY AMOUNT	M	**M**		
5025	Monetary amount type code qualifier	M an..3	**M**		9 = Amount due/amount payable 11 = Amount paid 12 = Amount remitted 52 = Discount amount 53 = Discount amount due 109 = Payment discount amount 126 = To collect 128 = Total amount 139 = Total payment amount 143 = Transfer amount When used in conjunction with code 481 in data element 1001 of the DOC segment only the amount remitted (code 12) should be used here. When used with all other codes in data element 1001 in the DOC segment it is recommended that the amount due (code 9) and the amount remitted (code 12) be included in this data element.
5004	Monetary amount	C n..35	**R**		
6345	Currency identification code	C an..3	**N**		
6343	Currency type code qualifier	C an..3	**N**		
4405	Status description code	C an..3	**N**		

Segment Notes:

This segment is used to specify monetary amounts related to the complete document identified in the previous DOC segment.

Example:
MOA+12:15677'

5. Segments Layout

Segment number: 50

SG4	- M	9999 -	LIN-DTM-RFF-BUS-FCA-SG5-SG6-SG7-SG8-SG9-SG10-SG11
SG11	- M	99999 -	SEQ-MOA-DTM-RFF-FCA-SG12-SG13-SG14-SG15-SG16
SG16	- C	1 -	PRC-FTX-SG17-SG23
SG17	- C	9999 -	DOC-MOA-DTM-RFF-NAD-SG18-SG19-SG20
DTM	- C	5 -	Date/time/period

Function:

To specify date, and/or time, or period.

		EDIFACT	GS1	*	Description
C507	DATE/TIME/PERIOD	M	**M**		
2005	Date or time or period function code qualifier	M an..3	**M**	*	137 = Document/message date/time 138 = Payment date 171 = Reference date/time 227 = Beneficiary's banks due date 265 = Due date
2380	Date or time or period value	C an..35	**R**		
2379	Date or time or period format code	C an..3	**R**		102 = CCYYMMDD 203 = CCYYMMDDHHMM

Segment Notes:

This segment is used to specify dates related to the document identified in the DOC segment.

Example:
DTM+137:19950510:102'

5. Segments Layout

Segment number: 51

SG4	- M	9999 -	LIN-DTM-RFF-BUS-FCA-SG5-SG6-SG7-SG8-SG9-SG10-SG11
SG11	- M	99999 -	SEQ-MOA-DTM-RFF-FCA-SG12-SG13-SG14-SG15-SG16
SG16	- C	1 -	PRC-FTX-SG17-SG23
SG17	- C	9999 -	DOC-MOA-DTM-RFF-NAD-SG18-SG19-SG20
RFF	- C	5 -	Reference

Function:

To specify a reference.

		EDIFACT	GS1	*	Description
C506	REFERENCE	M	**M**		
1153	Reference code qualifier	M an..3	**M**		AAB = Proforma invoice number AAJ = Delivery order number AAK = Despatch advice number CD = Credit note number CR = Customer reference number CT = Contract number DL = Debit note number DQ = Delivery note number IV = Invoice number ON = Order number (buyer) PL = Price list number POR = Purchase order response number PP = Purchase order change number VN = Order number (supplier)
1154	Reference identifier	C an..70	**R**		
1156	Document line identifier	C an..6	**N**		
4000	Reference version identifier	C an..35	**N**		
1060	Revision identifier	C an..6	**N**		

Segment Notes:

This segment is used to provide any additional references relevant to the currently identified DOC segment.

Example:
RFF+ON:A-7664'

5. Segments Layout

Segment number: 52

SG4	- M	9999 -	LIN-DTM-RFF-BUS-FCA-SG5-SG6-SG7-SG8-SG9-SG10-SG11
SG11	- M	99999 -	SEQ-MOA-DTM-RFF-FCA-SG12-SG13-SG14-SG15-SG16
SG16	- C	1 -	PRC-FTX-SG17-SG23
SG17	- C	9999 -	DOC-MOA-DTM-RFF-NAD-SG18-SG19-SG20
NAD	- C	2 -	Name and address

Function:

To specify the name/address and their related function, either by C082 only and/or unstructured by C058 or structured by C080 thru 3207.

		EDIFACT	GS1	*	Description
3035	Party function code qualifier	M an..3	**M**		BY = Buyer DP = Delivery party II = Issuer of invoice IV = Invoicee SU = Supplier UD = Ultimate customer
C082	PARTY IDENTIFICATION DETAILS	C	**A**		
3039	Party identifier	M an..35	**M**		For identification of parties it is recommended to use GLN - Format n13.
1131	Code list identification code	C an..17	**O**		
3055	Code list responsible agency code	C an..3	**R**	*	9 = GS1
C058	NAME AND ADDRESS	C	**O**		This composite may only be used to fulfill the requirements of directive 2003/58/EC, article 4.
3124	Name and address description	M an..35	**M**		
3124	Name and address description	C an..35	**O**		
3124	Name and address description	C an..35	**O**		
3124	Name and address description	C an..35	**O**		
3124	Name and address description	C an..35	**O**		
C080	PARTY NAME	C	**D**		
3036	Party name	M an..35	**M**		Party name in clear text.
3036	Party name	C an..35	**O**		
3036	Party name	C an..35	**O**		
3036	Party name	C an..35	**O**		
3036	Party name	C an..35	**O**		
3045	Party name format code	C an..3	**O**		
C059	STREET	C	**D**		
3042	Street and number or post office box identifier	M an..35	**M**		Building name/number and street name.
3042	Street and number or post office box identifier	C an..35	**O**		
3042	Street and number or post office box identifier	C an..35	**O**		
3042	Street and number or post office box identifier	C an..35	**O**		

5. Segments Layout

Segment number: 52

		EDIFACT	GS1	*	Description
3164	City name	C an..35	**D**		City/town name, clear text.
C819	COUNTRY SUB-ENTITY DETAILS	C	**D**		
3229	Country sub-entity name code	C an..9	**O**		
1131	Code list identification code	C an..17	**O**		
3055	Code list responsible agency code	C an..3	**O**		
3228	Country sub-entity name	C an..70	**O**		County/State, clear text.
3251	Postal identification code	C an..17	**D**		Postal code
3207	Country name code	C an..3	**D**		ISO 3166 two alpha code

Segment Notes:

This segment is used to identify any additional parties related to the currently identified document, e.g. delivery party.

Example:
NAD+DP+507161511110::9'

Dependency Notes:
The following composites and data elements are only used when a coded name and address can not be used.
The affected composites and data elements are as follows;
C080 - C059 - 3164 - C819 - 3251 - 3207

5. Segments Layout

Segment number: 53

SG4	- M	9999 -	LIN-DTM-RFF-BUS-FCA-SG5-SG6-SG7-SG8-SG9-SG10-SG11
SG11	- M	99999 -	SEQ-MOA-DTM-RFF-FCA-SG12-SG13-SG14-SG15-SG16
SG16	- C	1 -	PRC-FTX-SG17-SG23
SG17	- C	9999 -	DOC-MOA-DTM-RFF-NAD-SG18-SG19-SG20
SG18	- C	5 -	CUX-DTM
CUX	- M	1 -	Currencies

Function:

To specify currencies used in the transaction and relevant details for the rate of exchange.

		EDIFACT	GS1	*	Description
C504	CURRENCY DETAILS	C	**R**		
6347	Currency usage code qualifier	M an..3	**M**	*	2 = Reference currency
6345	Currency identification code	C an..3	**R**		ISO 4217 three alpha
6343	Currency type code qualifier	C an..3	**R**	*	11 = Payment currency
6348	Currency rate value	C n..4	**N**		
C504	CURRENCY DETAILS	C	**D**		The second occurrence of this composite is only used if a target currency is being specified.
6347	Currency usage code qualifier	M an..3	**M**	*	3 = Target currency
6345	Currency identification code	C an..3	**R**		ISO 4217 three alpha
6343	Currency type code qualifier	C an..3	**R**	*	4 = Invoicing currency
6348	Currency rate value	C n..4	**N**		
5402	Currency exchange rate	C n..12	**D**		The rate of exchange is only used if a target currency has been identified in the second occurrence of C504.
6341	Exchange rate currency market identifier	C an..3	**N**		

Segment Notes:

This segment is used to provide currency rate of exchange information used to convert amounts specified in the MOA segment for the referenced document, to an amount expressed in terms of the remittance/payment currency. This CUX segment will only be used when the currency of its rate of exchange is different from the default global currency or its rate of exchange specified in the CUX segment at heading level.
When specifying the Reference and Target currencies for international trade, one occurrence of CUX is all that is required. The reference currency is identified in the first occurrence of composite C504, with the target currency specified in the second occurrence of C504. The rate of exchange between the two is detailed in DE 5402.
The general rule for calculating the rate of exchange is as follows;
Reference Currency multiplied by Rate = Target Currency.

Example:
CUX+2:EUR:11+3:USD:4+0.90243'

5. Segments Layout

Segment number: 54

SG4	- M	9999 -	LIN-DTM-RFF-BUS-FCA-SG5-SG6-SG7-SG8-SG9-SG10-SG11
SG11	- M	99999 -	SEQ-MOA-DTM-RFF-FCA-SG12-SG13-SG14-SG15-SG16
SG16	- C	1 -	PRC-FTX-SG17-SG23
SG17	- C	9999 -	DOC-MOA-DTM-RFF-NAD-SG18-SG19-SG20
SG18	- C	5 -	CUX-DTM
DTM	- C	1 -	Date/time/period

Function:

To specify date, and/or time, or period.

		EDIFACT	GS1	*	Description
C507	DATE/TIME/PERIOD	M	**M**		
2005	Date or time or period function code qualifier	M an..3	**M**	*	134 = Rate of exchange date/time 273 = Validity period
2380	Date or time or period value	C an..35	**R**		
2379	Date or time or period format code	C an..3	**R**		102 = CCYYMMDD 718 = CCYYMMDD-CCYYMMDD

Segment Notes:

This segment is used to specify any dates related to the currency information specified in the previous CUX segment.

Example:
DTM+134:20020401:102'

5. Segments Layout

Segment number: 55

SG4	- M	9999 -	LIN-DTM-RFF-BUS-FCA-SG5-SG6-SG7-SG8-SG9-SG10-SG11
SG11	- M	99999 -	SEQ-MOA-DTM-RFF-FCA-SG12-SG13-SG14-SG15-SG16
SG16	- C	1 -	PRC-FTX-SG17-SG23
SG17	- C	9999 -	DOC-MOA-DTM-RFF-NAD-SG18-SG19-SG20
SG19	- C	100 -	AJT-MOA-RFF
AJT	- M	1 -	Adjustment details

Function:

To identify the reason for an adjustment.

		EDIFACT	GS1	*	Description
4465	Adjustment reason description code	M an..3	**M**		1 = Agreed settlement 2 = Below specification goods 3 = Damaged goods 4 = Short delivery 5 = Price query 6 = Proof of delivery required 9 = Invoice error 14 = Wrong delivery 17 = Transport damage 20 = Discount for late delivery 32 = Goods not delivered 52 = Wrong invoice If adjustments are made due to national tax practices then code values to identify these national practices may be allocated for use with this data element by individual Numbering Organisations.
1082	Line item identifier	C an..6	**N**		If specific references or information related to a line number in a document are required, then the line item number is given in the DLI segment and the adjustment given in the AJT segment, both in segment group 11.

Segment Notes:

This segment is used to indicate the reason for an adjustment to the current document.
Adjustments can be given for the whole referenced document identified in the DOC segment and additionally, can also be given per line item in the following DLI segment group.

Example:
AJT+4'

5. Segments Layout

Segment number: 56

SG4	- M	9999 -	LIN-DTM-RFF-BUS-FCA-SG5-SG6-SG7-SG8-SG9-SG10-SG11
SG11	- M	99999 -	SEQ-MOA-DTM-RFF-FCA-SG12-SG13-SG14-SG15-SG16
SG16	- C	1 -	PRC-FTX-SG17-SG23
SG17	- C	9999 -	DOC-MOA-DTM-RFF-NAD-SG18-SG19-SG20
SG19	- C	100 -	AJT-MOA-RFF
MOA	- M	1 -	Monetary amount

Function:

To specify a monetary amount.

		EDIFACT	GS1	*	Description
C516	MONETARY AMOUNT	M	**M**		
5025	Monetary amount type code qualifier	M an..3	**M**	*	5 = Adjusted amount 165 = Adjustment amount
5004	Monetary amount	C n..35	**R**		
6345	Currency identification code	C an..3	**N**		
6343	Currency type code qualifier	C an..3	**N**		
4405	Status description code	C an..3	**N**		

Segment Notes:

This segment is used to indicate the value of the adjusted amount for the current document.
Adjustment amounts may be given for information purposes only, i.e. not for calculation. The adjustment amount will not necessarily equal the difference between the amount due and the amount remitted.

Example:
MOA+5:8700'

5. Segments Layout

Segment number: 57

SG4	- M	9999	- LIN-DTM-RFF-BUS-FCA-SG5-SG6-SG7-SG8-SG9-SG10-SG11
SG11	- M	99999	- SEQ-MOA-DTM-RFF-FCA-SG12-SG13-SG14-SG15-SG16
SG16	- C	1	- PRC-FTX-SG17-SG23
SG17	- C	9999	- DOC-MOA-DTM-RFF-NAD-SG18-SG19-SG20
SG19	- C	100	- AJT-MOA-RFF
RFF	- C	1	- Reference

Function:

To specify a reference.

		EDIFACT	GS1	*	Description
C506	REFERENCE	M	**M**		
1153	Reference code qualifier	M an..3	**M**		AAK = Despatch advice number ON = Order number (buyer) PL = Price list number PP = Purchase order change number POR = Purchase order response number VN = Order number (supplier)
1154	Reference identifier	C an..70	**R**		
1156	Document line identifier	C an..6	**N**		
4000	Reference version identifier	C an..35	**N**		
1060	Revision identifier	C an..6	**N**		

Segment Notes:

This segment is used to specify any references associated with the adjusted amounts.
If specific references or information related to a line item number in a document are required then this information is provided in the AJT segment group (group 11) at DLI level.

Example:
RFF+PL:JAN-1995'

5. Segments Layout

Segment number: 58

SG4	- M	9999	-	LIN-DTM-RFF-BUS-FCA-SG5-SG6-SG7-SG8-SG9-SG10-SG11
SG11	- M	99999	-	SEQ-MOA-DTM-RFF-FCA-SG12-SG13-SG14-SG15-SG16
SG16	- C	1	-	PRC-FTX-SG17-SG23
SG17	- C	9999	-	DOC-MOA-DTM-RFF-NAD-SG18-SG19-SG20
SG20	- C	1000	-	DLI-MOA-PIA-SG22
DLI	- M	1	-	Document line identification

Function:

To specify the processing mode of a specific line within a referenced document.

		EDIFACT	GS1	*	Description
1073	Document line action code	M an..3	**M**		1 = Included in document/transaction 2 = Excluded from document/transaction
1082	Line item identifier	M an..6	**M**		

Segment Notes:

This segment is used to identify individual line items within the document identified in the DOC segment.

Example:
DLI+2+55'

5. Segments Layout

Segment number: 59

SG4	- M	9999 -	LIN-DTM-RFF-BUS-FCA-SG5-SG6-SG7-SG8-SG9-SG10-SG11
SG11	- M	99999 -	SEQ-MOA-DTM-RFF-FCA-SG12-SG13-SG14-SG15-SG16
SG16	- C	1 -	PRC-FTX-SG17-SG23
SG17	- C	9999 -	DOC-MOA-DTM-RFF-NAD-SG18-SG19-SG20
SG20	- C	1000 -	DLI-MOA-PIA-SG22
MOA	- M	5 -	Monetary amount

Function:

To specify a monetary amount.

		EDIFACT	GS1	*	Description
C516	MONETARY AMOUNT	M	**M**		
5025	Monetary amount type code qualifier	M an..3	**M**		9 = Amount due/amount payable 12 = Amount remitted 52 = Discount amount 53 = Discount amount due 109 = Payment discount amount 143 = Transfer amount 203 = Line item amount
5004	Monetary amount	C n..35	**R**		
6345	Currency identification code	C an..3	**O**		
6343	Currency type code qualifier	C an..3	**N**		
4405	Status description code	C an..3	**N**		

Segment Notes:

This segment is used to indicate the amount due and the amount remitted for the line item identified in the DLI segment for the current document.

Example:
MOA+12:4500'
MOA+9:52000'

5. Segments Layout

Segment number: 60

SG4	- M	9999 -	LIN-DTM-RFF-BUS-FCA-SG5-SG6-SG7-SG8-SG9-SG10-SG11
SG11	- M	99999 -	SEQ-MOA-DTM-RFF-FCA-SG12-SG13-SG14-SG15-SG16
SG16	- C	1 -	PRC-FTX-SG17-SG23
SG17	- C	9999 -	DOC-MOA-DTM-RFF-NAD-SG18-SG19-SG20
SG20	- C	1000 -	DLI-MOA-PIA-SG22
PIA	- C	5 -	Additional product id

Function:

To specify additional or substitutional item identification codes.

		EDIFACT	GS1	*	Description
4347	Product identifier code qualifier	M an..3	**M**	*	5 = Product identification
C212	ITEM NUMBER IDENTIFICATION	M	**M**		
7140	Item identifier	C an..35	**R**		EAN-8, UPC-A, EAN-13, or DUN-14, this is the number of the trade item for which the adjustment details are provided.
7143	Item type identification code	C an..3	**R**		AC = HIBC (Health Industry Bar Code) IB = ISBN (International Standard Book Number) IN = Buyer's item number SA = Supplier's article number SRV = GS1 Global Trade Item Number
1131	Code list identification code	C an..17	**O**		
3055	Code list responsible agency code	C an..3	**D**		9 = GS1 91 = Assigned by supplier or supplier's agent 92 = Assigned by buyer or buyer's agent
C212	ITEM NUMBER IDENTIFICATION	C	**O**		
7140	Item identifier	C an..35	**R**		
7143	Item type identification code	C an..3	**R**		
1131	Code list identification code	C an..17	**O**		
3055	Code list responsible agency code	C an..3	**D**		
C212	ITEM NUMBER IDENTIFICATION	C	**O**		
7140	Item identifier	C an..35	**R**		
7143	Item type identification code	C an..3	**R**		
1131	Code list identification code	C an..17	**O**		
3055	Code list responsible agency code	C an..3	**D**		
C212	ITEM NUMBER IDENTIFICATION	C	**O**		
7140	Item identifier	C an..35	**R**		
7143	Item type identification code	C an..3	**R**		
1131	Code list identification code	C an..17	**O**		
3055	Code list responsible agency	C an..3	**D**		

5. Segments Layout

Segment number: 60

		EDIFACT	GS1	*	Description
	code				
C212	ITEM NUMBER IDENTIFICATION	C	**O**		
7140	Item identifier	C an..35	**R**		
7143	Item type identification code	C an..3	**R**		
1131	Code list identification code	C an..17	**O**		
3055	Code list responsible agency code	C an..3	**D**		

Segment Notes:

This segment is used to provide the product identification of the line item detailed in the DLI segment for the current document.

Example:
PIA+5+3323456007803:SRV'

5. Segments Layout

Segment number: 61

SG4	- M	9999 -	LIN-DTM-RFF-BUS-FCA-SG5-SG6-SG7-SG8-SG9-SG10-SG11
SG11	- M	99999 -	SEQ-MOA-DTM-RFF-FCA-SG12-SG13-SG14-SG15-SG16
SG16	- C	1 -	PRC-FTX-SG17-SG23
SG17	- C	9999 -	DOC-MOA-DTM-RFF-NAD-SG18-SG19-SG20
SG20	- C	1000 -	DLI-MOA-PIA-SG22
SG22	- C	10 -	AJT-MOA-RFF
AJT	- M	1 -	Adjustment details

Function:

To identify the reason for an adjustment.

		EDIFACT	GS1	*	Description
4465	Adjustment reason description code	M an..3	**M**		1 = Agreed settlement 2 = Below specification goods 3 = Damaged goods 4 = Short delivery 5 = Price query 6 = Proof of delivery required 9 = Invoice error 14 = Wrong delivery 17 = Transport damage 20 = Discount for late delivery 32 = Goods not delivered If adjustments are made due to national tax practices then code values to identify these national practices may be allocated for use with this data element by individual Numbering Organisations.
1082	Line item identifier	C an..6	**N**		

Segment Notes:

This segment is used to indicate the reason for an adjustment to the current line identified in the DLI segment.

Example:
AJT+5'

5. Segments Layout

Segment number: 62

SG4	- M	9999 -	LIN-DTM-RFF-BUS-FCA-SG5-SG6-SG7-SG8-SG9-SG10-SG11
SG11	- M	99999 -	SEQ-MOA-DTM-RFF-FCA-SG12-SG13-SG14-SG15-SG16
SG16	- C	1 -	PRC-FTX-SG17-SG23
SG17	- C	9999 -	DOC-MOA-DTM-RFF-NAD-SG18-SG19-SG20
SG20	- C	1000 -	DLI-MOA-PIA-SG22
SG22	- C	10 -	AJT-MOA-RFF
MOA	- M	1 -	Monetary amount

Function:

To specify a monetary amount.

		EDIFACT	GS1	*	Description
C516	MONETARY AMOUNT	M	**M**		
5025	Monetary amount type code qualifier	M an..3	**M**	*	5 = Adjusted amount 165 = Adjustment amount
5004	Monetary amount	C n..35	**R**		
6345	Currency identification code	C an..3	**N**		
6343	Currency type code qualifier	C an..3	**N**		
4405	Status description code	C an..3	**N**		

Segment Notes:

This segment is used to indicate the value of the adjusted amount for the current line item.
Adjustment amounts may be provided for information purposes only, e.g. not for calculation. The adjustment amount will not necessarily equal the difference between the amount due and the amount remitted.
The adjustment amount will always be expressed in terms of the remittance/payment currency.

Example:
MOA+5:4920'

5. Segments Layout

Segment number: 63

SG4	- M	9999 -	LIN-DTM-RFF-BUS-FCA-SG5-SG6-SG7-SG8-SG9-SG10-SG11
SG11	- M	99999 -	SEQ-MOA-DTM-RFF-FCA-SG12-SG13-SG14-SG15-SG16
SG16	- C	1 -	PRC-FTX-SG17-SG23
SG17	- C	9999 -	DOC-MOA-DTM-RFF-NAD-SG18-SG19-SG20
SG20	- C	1000 -	DLI-MOA-PIA-SG22
SG22	- C	10 -	AJT-MOA-RFF
RFF	- C	1 -	Reference

Function:

To specify a reference.

		EDIFACT	GS1	*	Description
C506	REFERENCE	M	**M**		
1153	Reference code qualifier	M an..3	**M**		ON = Order number (buyer) PL = Price list number PP = Purchase order change number POR = Purchase order response number VN = Order number (supplier)
1154	Reference identifier	C an..70	**R**		
1156	Document line identifier	C an..6	**O**		
4000	Reference version identifier	C an..35	**N**		
1060	Revision identifier	C an..6	**N**		

Segment Notes:

This segment is used to specify any references associated with the adjustment amounts for the current line item.

Example:
RFF+PP:6522'

5. Segments Layout

Segment number: 64

SG4	- M	9999	-	LIN-DTM-RFF-BUS-FCA-SG5-SG6-SG7-SG8-SG9-SG10-SG11
SG11	- M	99999	-	SEQ-MOA-DTM-RFF-FCA-SG12-SG13-SG14-SG15-SG16
SG16	- C	1	-	PRC-FTX-SG17-SG23
SG23	- C	1	-	GIS-MOA
GIS	- M	1	-	General indicator

Function:

To transmit a processing indicator.

Notes:
1. This segment will be removed effective with directory D.02B.

		EDIFACT	GS1	*	Description
C529	PROCESSING INDICATOR	M	**M**		
7365	Processing indicator description code	M an..3	**M**	*	37 = Complete information
1131	Code list identification code	C an..17	**N**		
3055	Code list responsible agency code	C an..3	**N**		
7187	Process type description code	C an..17	**N**		

Segment Notes:

This segment is used to indicate the end of the detail of payment.
It is recommended that this segment always be included in order to explicitly indicate the end of the payment details.

Example:
GIS+37'

5. Segments Layout

Segment number: 65

SG4	- M	9999 -	LIN-DTM-RFF-BUS-FCA-SG5-SG6-SG7-SG8-SG9-SG10-SG11
SG11	- M	99999 -	SEQ-MOA-DTM-RFF-FCA-SG12-SG13-SG14-SG15-SG16
SG16	- C	1 -	PRC-FTX-SG17-SG23
SG23	- C	1 -	GIS-MOA
MOA	- C	5 -	Monetary amount

Function:

To specify a monetary amount.

		EDIFACT	GS1	*	Description
C516	MONETARY AMOUNT	M	**M**		
5025	Monetary amount type code qualifier	M an..3	**M**		128 = Total amount
5004	Monetary amount	C n..35	**R**		
6345	Currency identification code	C an..3	**N**		
6343	Currency type code qualifier	C an..3	**N**		
4405	Status description code	C an..3	**N**		

Segment Notes:

This segment is used to indicate the total value of level C for control purposes. The figure detailed here is simply an accumulation of the values specified in all MOA segments in level C regardless of the qualifiers used in DE 5025.

Example:
MOA+128:25601'

5. Segments Layout

Segment number: 66

CNT - C 5 - Control total					
Function: To provide control total.					
		EDIFACT	GS1	*	Description
C270	CONTROL	M	**M**		
6069	Control total type code qualifier	M an..3	**M**		2 = Number of line items in message 40 = Total number of sequence details in message
6066	Control total value	M n..18	**M**		
6411	Measurement unit code	C an..3	**O**		
Segment Notes: This segment is used to provide application data for message control purposes. Example: CNT+2:26'					

5. Segments Layout

Segment number: 67

SG24	- C	5 -	AUT-DTM
AUT	- M	1 -	Authentication result

Function:

To specify results of the application of an authentication procedure.

		EDIFACT	GS1	*	Description
9280	Validation result value	M an..35	**M**		
9282	Validation key identifier	C an..35	**O**		This data element is used to identify the key which has been/is used to validate the contents of the message.

Segment Notes:

This segment is used to provide details of any authentication procedures which have been applied to the direct debit message. The use of this segment is, including any algorithms and calculation procedures, dependent on bilaterally agreed conditions between the message sender and receiver.

Example:
AUT+7761'

5. Segments Layout

Segment number: 68

SG24	- C	5 -	AUT-DTM
DTM	- C	1 -	Date/time/period

Function:

To specify date, and/or time, or period.

		EDIFACT	GS1	*	Description
C507	DATE/TIME/PERIOD	M	**M**		
2005	Date or time or period function code qualifier	M an..3	**M**	*	218 = Authentication/validation date/time
2380	Date or time or period value	C an..35	**R**		
2379	Date or time or period format code	C an..3	**R**		102 = CCYYMMDD 203 = CCYYMMDDHHMM

Segment Notes:

This segment is used to provide details related to the date and where necessary, the time, of the direct debit message validation.

Example:
DTM+218:200206011200:203'
The direct debit message was validated at 12 noon on the 1st of June 2002.

5. Segments Layout

Segment number: 69

UNT	- M	1 - Message trailer

Function:

To end and check the completeness of a message.

Notes:
1. 0062, the value shall be identical to the value in 0062 in the corresponding UNH segment.

		EDIFACT	GS1	*	Description
0074	Number of segments in a message	M n..10	**M**		The total number of segments in the message.
0062	Message reference number	M an..14	**M**		

Segment Notes:

The UNT segment is a mandatory UN/EDIFACT segment. It must always be the last segment in the message.

Example:
UNT+68+00025'

5. Segments Layout

Segment number: 70

UNZ - M 1 - Interchange trailer					
Function: To end and check the completeness of an interchange. Notes: 1. 0020, the value shall be identical to the value in 0020 in the corresponding UNB segment.					
		EDIFACT	GS1	*	Description
0036	Interchange control count	M n..6	**M**		Number of messages or functional groups within an interchange.
0020	Interchange control reference	M an..14	**M**		Identical to DE 0020 in UNB segment.
Segment Notes: This segment is used to provide the trailer of an interchange. DE 0036: If functional groups are used, this is the number of functional groups within the interchange. If functional groups are not used, this is the number of messages within the interchange. UNZ+5+12345555'					

Example 1

The following is an example of a simple direct debit message sent by an creditor identified by GLN 5422331123459 providing details of a direct debit being made against the debtor, ACE Supplies.

The message, identified by the number 50621, which was generated on the 21st of August 2002, provides details of credits totalling 28000 Euros (EUR). The banks of the creditor and debtor are identified using the ISO bank identification codes. The message provides details related to three remittance advices identified by the numbers 2862, 6157, and 10211.

UNH+ME0000001+DIRDEB:D:01B:UN:EAN003'	Message header
BGM+214+50621+9'	Multiple payment order number 50621
DTM+137:20020821:102'	Date of message 21st of August 2002
FII+MR++KREDBEBB:25:5'	Message recipient identified by ISO bank identification code KREDBEBB
NAD+MS+5422331123459::9'	Message sender identified by GLN 5422331123459
LIN+1'	Start of level B
DTM+XF1:200200901:102'	Creditor's requested value date 1st September 2002
RFF+DDC:HE982'	Direct debit contract reference number HE982
RFF+AHL:186-42'	Creditor's reference number 186-42
MOA+9:28000:EUR'	Amount due/payable equals 28000 EUR
FII+CRB+994-9876511:ABC EXPRESS+KREDBEBB:25:5'	Creditor's bank and account number identification
NAD+CRE+5422331123459::9'	Creditor identified by GLN 5422331123459
SEQ++1'	Start of level C, number 1
MOA+9:8000:EUR'	Amount due/payable equals 8000 EUR
DTM+434:200200831:102'	Maturity date for debtor 31st August 2002
RFF+AHM:766-21'	Debtors reference 766-21
RFF+ANZ:937-A'	Direct debit reference 937-A
RFF+RA:2862'	Reference to remittance advice number 2862
FII+DBB+994-3277711:J HOLMES+KREDBEBB:25:5'	Debtor's bank and account number identification
NAD+HX+++ACE SUPPLIES'	Structured name of the debtor
SEQ++2'	Start of level C, number 2
MOA+9:14000:EUR'	Amount due/payable equals 14000 EUR
RFF+AHM:401-37'	Debtors reference 401-37

RFF+ANZ:937-A'	Direct debit reference 937-A
RFF+RA:6157'	Reference to remittance advice number 6157
FII+DBB+994-3277711:J HOLMES+KREDBEBB:25:5'	Debtor's bank and account number identification
NAD+HX+++ACE SUPPLIES'	Structured name of the debtor
SEQ++3'	Start of level C, number 3
MOA+9:6000:EUR'	Amount due/payable equals 6000 EUR
RFF+AHM:791-23'	Debtors reference 791-23
RFF+ANZ:937-A'	Direct debit reference 937-A
RFF+RA:10211'	Reference to remittance advice number 10211
FII+DBB+994-3277711:J HOLMES+KREDBEBB:25:5'	Debtor's bank and account number identification
NAD+HX+++ACE SUPPLIES'	Structured name of the debtor
UNT+35+ME0000001'	Total number of segments in the message equals 35

Example 2

The following is an example of a direct debit message sent by the creditor, Sea Fresh Foods, providing details of credits being claimed against its customers.

The message, identified by the number 2571, was generated on the 21st of June 2002, provides details of payments totalling 200000 Euros (EUR). The banks of the creditor and debtor are identified using the ISO bank identification codes No remittance data is included in the message but references to EANCOM® remittance advice messages are provided.

Debtor	Debtor’s Bank	Remittance Advice No
5087654111110	KEDBEBB	4018
		4160
5480011222229	UBSCHZHA	3988
		4022
		4089
5312888111118	GENBBEBB	3051
		4029
4021212111113	DRESDEFF	4180
		4199

UNH+ME0000001+DIRDEB:D:01B:UN:EAN003'	Message header
BGM+214+2571+9'	Direct debit number 2571
DTM+137:20020621:102'	Message date 21st of June 2002
FII+MR++DRESDEFF:25:5'	Message recipient identified by ISO bank identification code DRESDEFF

NAD+MS+++SEA FRESH FOODS'	Message sender identified as Sea Fresh Foods
LIN+1'	Start of B level
DTM+XF1:20020630:102'	Creditor's requested value date 30th June 2002
RFF+DDC:931'	Direct debit reference number 931
MOA+9:200000:EUR'	Amount due/payable equals 200000 EUR
FII+CRB+123-0032219:ABSAA+DRESDEFF:25:5'	Creditor's bank and account number identification
NAD+CRE+++SEA FRESH FOODS'	Identification of the creditor
SEQ++1'	Start of C level number 1
MOA+9:68000'	Amount due/payable equals 68000 EUR
RFF+ANZ:125'	Direct debit reference 125
RFF+AHM:AX-23'	Debtor's reference AX-23
RFF+RA:4018'	Remittance advice number 4018
FII+DBB+994-32366211+KREDBEBB:25:5'	Debtor's bank and account number identification
NAD+HX+5087654111110::9'	Debtor identified by GLN 5087654111110
SEQ++2'	Start of C level number 2
MOA+9:5400'	Amount due/payable equals 5400 EUR
RFF+ANZ:LM-98'	Direct debit reference LM-98
RFF+AHM:6557'	Debtor's reference 6557
RFF+RA:4160'	Remittance advice number 4160
FII+DBB+994-32366211+KREDBEBB:25:5'	Debtor's bank and account number identification
NAD+HX+5087654111110::9'	Debtor identified by GLN 5087654111110
SEQ++3'	Start of C level number 3
MOA+9:12680'	Amount due/payable equals 12680 EUR
RFF+ANZ:4937'	Direct debit reference 4937
RFF+AHM:6827'	Debtor's reference 6827
RFF+RA:3988'	Remittance advice number 3988
FII+DBB+650-52217711+UBSCHZHA:25:5'	Debtor's bank and account number identification

NAD+HX+5480011222229::9'	Debtor identified by GLN 5480011222229
SEQ++4'	Start of C level number 3
MOA+9:11000'	Amount due/payable equals 11000 EUR
RFF+ANZ:128’	Direct debit reference 128
RFF+AHM:395'	Debtor’s reference 395
RFF+RA:4022'	Remittance advice number 4022
FII+DBB+650-52217711+UBSCHZHA:25:5'	Debtor’s bank and account number identification
NAD+HX+5480011222229::9'	Debtor identified by GLN 5480011222229
SEQ++5'	Start of C level number 5
MOA+9:4000'	Amount due/payable equals 4000 EUR
RFF+ANZ:9837’	Direct debit reference 9837
RFF+AHM:401'	Debtor’s reference 401
RFF+RA:4089'	Remittance advice number 4089
FII+DBB+650-52217711+UBSCHZHA:25:5'	Debtor’s bank and account number identification
NAD+HX+5480011222229::9'	Debtor identified by GLN 5480011222229
SEQ++6'	Start of C level number 6
MOA+9:42000'	Amount due/payable equals 42000 EUR
RFF+ANZ:LT-63’	Direct debit reference LT-63
RFF+AHM:121'	Debtor’s reference 121
RFF+RA:3051'	Remittance advice number 3051
FII+DBB+520-87552250+GENBBEBB:25:5'	Debtor’s bank and account number identification
NAD+HX+5312888111118::9'	Debtor identified by GLN 5312888111118
SEQ++7'	Start of C level number 7
MOA+9:25000'	Amount due/payable equals 25000 EUR
RFF+ANZ:302’	Direct debit reference 302
RFF+AHM:1186'	Debtor’s reference 1186
RFF+RA:4029'	Remittance advice number 4029

6. Examples

FII+DBB+520-87552250+GENBBEBB:25:5'	Debtor's bank and account number identification
NAD+HX+5312888111118::9'	Debtor identified by GLN 5312888111118
SEQ++8'	Start of C level number 8
MOA+9:14000'	Amount due/payable equals 14000 EUR
RFF+ANZ:158-LJ'	Direct debit reference 158-LJ
RFF+AHM:196'	Debtor's reference 196
RFF+RA:4180'	Remittance advice number 4180
FII+DBB+988-53324781+DRESDEFF:25:5'	Debtor's bank and account number identification
NAD+HX+4021212111113::9'	Debtor identified by GLN 4021212111113
SEQ++9'	Start of C level number 9
MOA+9:17920'	Amount due/payable equals 17920 EUR
RFF+ANZ:630HG'	Direct debit reference 630HG
RFF+AHM:937F'	Debtor's reference 937F
RFF+RA:4199'	Remittance advice number 4199
FII+DBB+988-53324781+DRESDEFF:25:5'	Debtor's bank and account number identification
NAD+HX+4021212111113::9'	Debtor identified by GLN 4021212111113
UNT+75+ME0000001'	Total number of segments in the message equals 75

Note : The EDI interchange will include the UNB..UNZ segments and, if applicable, the UNG..UNE segments. (See part 1 section 5.7).