# EANCOM® 2002 S4

# INVOIC

# Invoice message

# Edition 2016 Upd. 2021

1. Introduction ..... 2
2. Message Structure Chart ..... 3
3. Branching Diagram ..... 6
4. Segments Description ..... 17
5. Segments Layout ..... 26
6. Example(s) ..... 138

## 1. Introduction

### Status

| | |
|---|---|
| MESSAGE TYPE | :INVOIC |
| REFERENCE DIRECTORY | :D.01B |
| EANCOM® SUBSET VERSION | :011 |

### Definition

A message claiming payment for goods or services supplied under conditions agreed between the seller and the buyer.

The United Nations Standard Invoice Message, with correct data qualification, serves also as the specification for Debit Note and Credit Note messages.

Throughout this document, the reference to 'Invoice' may be interpreted as conveying the wider meaning of 'Invoice/Credit Note/Debit Note'.

### Principles

A seller may invoice for one or more transactions

An invoice may refer to goods, items or services related to one or more orders, delivery instructions, call-offs, etc...

An invoice may contain references to payment terms

An invoice for cross border transactions may contain additional information for customs and/or statistical purposes/services

An invoice may contain transport details.

## 2. Message Structure Chart

| | | | | | |
|---|---|---|---|---|---|
| UNA | | 1 | C | 1 | - Service string advice |
| UNB | | 2 | M | 1 | - Interchange header |
| **Invoice Heading Section** | | | | | |
| UNH | | 3 | M | 1 | - Message header |
| BGM | | 4 | M | 1 | - Beginning of message |
| DTM | | 5 | M | 35 | - Date/time/period |
| PAI | | 6 | C | 1 | - Payment instructions |
| ALI | | 7 | C | 5 | - Additional information |
| FTX | | 8 | C | 99 | - Free text |
| SG1 | | | C | 99999 | - RFF-DTM |
| RFF | | 9 | M | 1 | - Reference |
| DTM | | 10 | C | 5 | - Date/time/period |
| SG2 | | | C | 99 | - NAD-FII-SG3-SG5 |
| NAD | | 11 | M | 1 | - Name and address |
| FII | | 12 | C | 5 | - Financial institution information |
| SG3 | | | C | 9999 | - RFF |
| RFF | | 13 | M | 1 | - Reference |
| SG5 | | | C | 5 | - CTA-COM |
| CTA | | 14 | M | 1 | - Contact information |
| COM | | 15 | C | 5 | - Communication contact |
| SG6 | | | C | 5 | - TAX-MOA |
| TAX | | 16 | M | 1 | - Duty/tax/fee details |
| MOA | | 17 | C | 1 | - Monetary amount |
| SG7 | | | C | 99 | - CUX-DTM |
| CUX | | 18 | M | 1 | - Currencies |
| DTM | | 19 | C | 5 | - Date/time/period |
| SG8 | * | | C | 10 | - PAT-DTM-PCD-MOA-PAI-FII |
| PAT | X | 20 | M | 1 | - Payment terms basis |
| DTM | | 21 | C | 5 | - Date/time/period |
| PCD | | 22 | C | 1 | - Percentage details |
| MOA | | 23 | C | 1 | - Monetary amount |
| PAI | + | 24 | C | 1 | - Payment instructions |
| FII | + | 25 | C | 1 | - Financial institution information |
| SG9 | * | | C | 10 | - TDT-SG10-SG11 |
| TDT | | 26 | M | 1 | - Details of transport |
| SG10 | + | | C | 10 | - LOC-DTM |
| LOC | + | 27 | M | 1 | - Place/location identification |
| DTM | + | 28 | C | 5 | - Date/time/period |
| SG11 | | | C | 9999 | - RFF |
| RFF | | 29 | M | 1 | - Reference |
| SG12 | | | C | 5 | - TOD-LOC |
| TOD | | 30 | M | 1 | - Terms of delivery or transport |
| LOC | | 31 | C | 2 | - Place/location identification |
| SG14 | | | C | 1000 | - PAC |
| PAC | | 32 | M | 1 | - Package |
| SG16 | | | C | 9999 | - ALC-SG18-SG19-SG20-SG21-SG22 |
| ALC | | 33 | M | 1 | - Allowance or charge |
| SG18 | | | C | 1 | - QTY |
| QTY | | 34 | M | 1 | - Quantity |
| SG19 | | | C | 1 | - PCD |
| PCD | | 35 | M | 1 | - Percentage details |
| SG20 | | | C | 2 | - MOA |
| MOA | | 36 | M | 1 | - Monetary amount |
| SG21 | | | C | 1 | - RTE |
| RTE | | 37 | M | 1 | - Rate details |
| SG22 | | | C | 5 | - TAX-MOA |
| TAX | | 38 | M | 1 | - Duty/tax/fee details |
| MOA | | 39 | C | 1 | - Monetary amount |

## 2. Message Structure Chart

| | | | | | |
|---|---|---|---|---|---|
| SG24 | | | C | 1 | - AJT |
| AJT | | 40 | M | 1 | - Adjustment details |

**Invoice Detail Section**

| | | | | | |
|---|---|---|---|---|---|
| SG26 | * | | C | 9999999 | - LIN-PIA-IMD-MEA-QTY-ALI-DTM-GIN-QVR-FTX-SG27-SG28-SG29- |
| LIN | | 41 | M | 1 | - Line item |
| PIA | | 42 | C | 25 | - Additional product id |
| IMD | | 43 | C | 99 | - Item description |
| MEA | | 44 | C | 5 | - Measurements |
| QTY | | 45 | C | 5 | - Quantity |
| ALI | | 46 | C | 5 | - Additional information |
| DTM | | 47 | C | 35 | - Date/time/period |
| GIN | + | 48 | C | 1000 | - Goods identity number |
| QVR | | 49 | C | 1 | - Quantity variances |
| FTX | | 50 | C | 99 | - Free text |
| SG27 | | | C | 99 | - MOA |
| MOA | | 51 | M | 1 | - Monetary amount |
| SG28 | | | C | 10 | - PAT-DTM-PCD-MOA |
| PAT | X | 52 | M | 1 | - Payment terms basis |
| DTM | | 53 | C | 5 | - Date/time/period |
| PCD | | 54 | C | 99 | - Percentage details |
| MOA | | 55 | C | 1 | - Monetary amount |
| SG29 | * | | C | 25 | - PRI-APR |
| PRI | | 56 | M | 1 | - Price details |
| APR | + | 57 | C | 1 | - Additional price information |
| SG30 | | | C | 10 | - RFF-DTM |
| RFF | | 58 | M | 1 | - Reference |
| DTM | | 59 | C | 5 | - Date/time/period |
| SG31 | | | C | 10 | - PAC-MEA-SG32 |
| PAC | | 60 | M | 1 | - Package |
| MEA | | 61 | C | 10 | - Measurements |
| SG32 | | | C | 10 | - PCI-GIN |
| PCI | | 62 | M | 1 | - Package identification |
| GIN | | 63 | C | 10 | - Goods identity number |
| SG33 | | | C | 9999 | - LOC-QTY-DTM |
| LOC | | 64 | M | 1 | - Place/location identification |
| QTY | | 65 | C | 100 | - Quantity |
| DTM | | 66 | C | 5 | - Date/time/period |
| SG34 | | | C | 99 | - TAX-MOA |
| TAX | | 67 | M | 1 | - Duty/tax/fee details |
| MOA | | 68 | C | 2 | - Monetary amount |
| SG35 | | | C | 99 | - NAD-SG36 |
| NAD | | 69 | M | 1 | - Name and address |
| SG36 | | | C | 5 | - RFF |
| RFF | | 70 | M | 1 | - Reference |
| SG39 | * | | C | 30 | - ALC-ALI-DTM-SG40-SG41-SG42-SG43-SG44 |
| ALC | | 71 | M | 1 | - Allowance or charge |
| ALI | | 72 | C | 5 | - Additional information |
| DTM | + | 73 | C | 5 | - Date/time/period |
| SG40 | | | C | 1 | - QTY |
| QTY | | 74 | M | 1 | - Quantity |
| SG41 | | | C | 1 | - PCD |
| PCD | | 75 | M | 1 | - Percentage details |
| SG42 | | | C | 2 | - MOA |
| MOA | | 76 | M | 1 | - Monetary amount |
| SG43 | | | C | 1 | - RTE |
| RTE | | 77 | M | 1 | - Rate details |
| SG44 | | | C | 5 | - TAX-MOA |
| TAX | | 78 | M | 1 | - Duty/tax/fee details |

## 2. Message Structure Chart

| | | | | | |
|---|---|---|---|---|---|
| MOA | | 79 | C | 2 | - Monetary amount |
| SG45 | | | C | 10 | - TDT |
| TDT | | 80 | M | 1 | - Details of transport |
| SG47 | + | | C | 5 | - TOD-LOC |
| TOD | + | 81 | M | 1 | - Terms of delivery or transport |
| LOC | + | 82 | C | 2 | - Place/location identification |

**Invoice Summary Section**

| | | | | | |
|---|---|---|---|---|---|
| UNS | | 83 | M | 1 | - Section control |
| CNT | | 84 | C | 10 | - Control total |
| SG50 | | | M | 100 | - MOA-SG51 |
| MOA | | 85 | M | 1 | - Monetary amount |
| SG51 | | | C | 10 | - RFF-DTM |
| RFF | | 86 | M | 1 | - Reference |
| DTM | | 87 | C | 5 | - Date/time/period |
| SG52 | | | C | 10 | - TAX-MOA |
| TAX | | 88 | M | 1 | - Duty/tax/fee details |
| MOA | | 89 | C | 9 | - Monetary amount |
| SG53 | | | C | 15 | - ALC-ALI-MOA |
| ALC | | 90 | M | 1 | - Allowance or charge |
| ALI | | 91 | C | 1 | - Additional information |
| MOA | | 92 | C | 2 | - Monetary amount |
| UNT | | 93 | M | 1 | - Message trailer |
| UNZ | | 94 | M | 1 | - Interchange trailer |

## 3. Branching Diagram

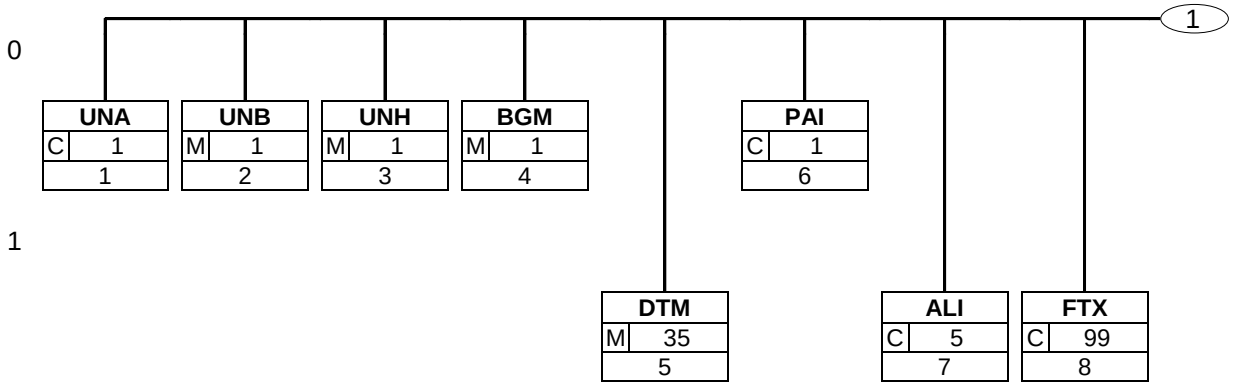

## 3. Branching Diagram

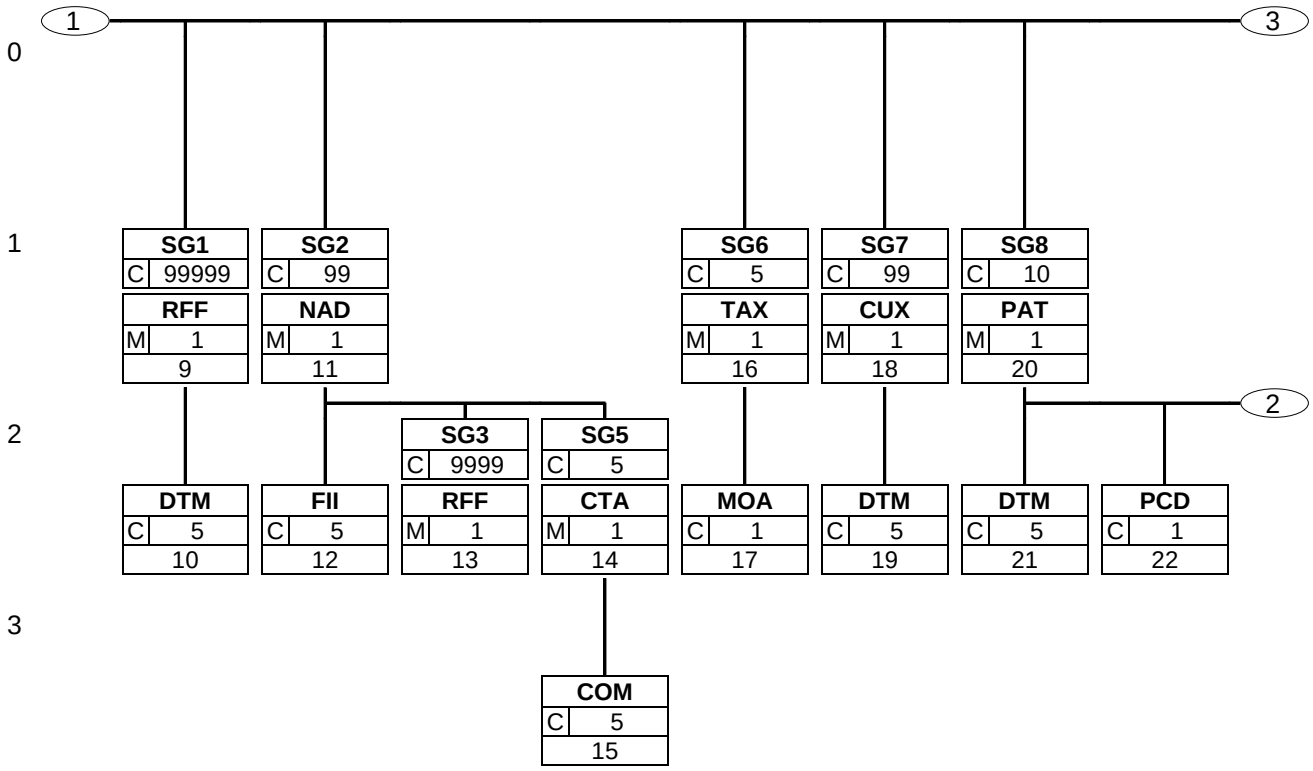

## 3. Branching Diagram

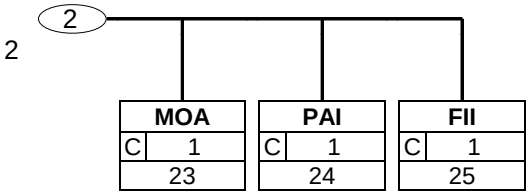

## 3. Branching Diagram

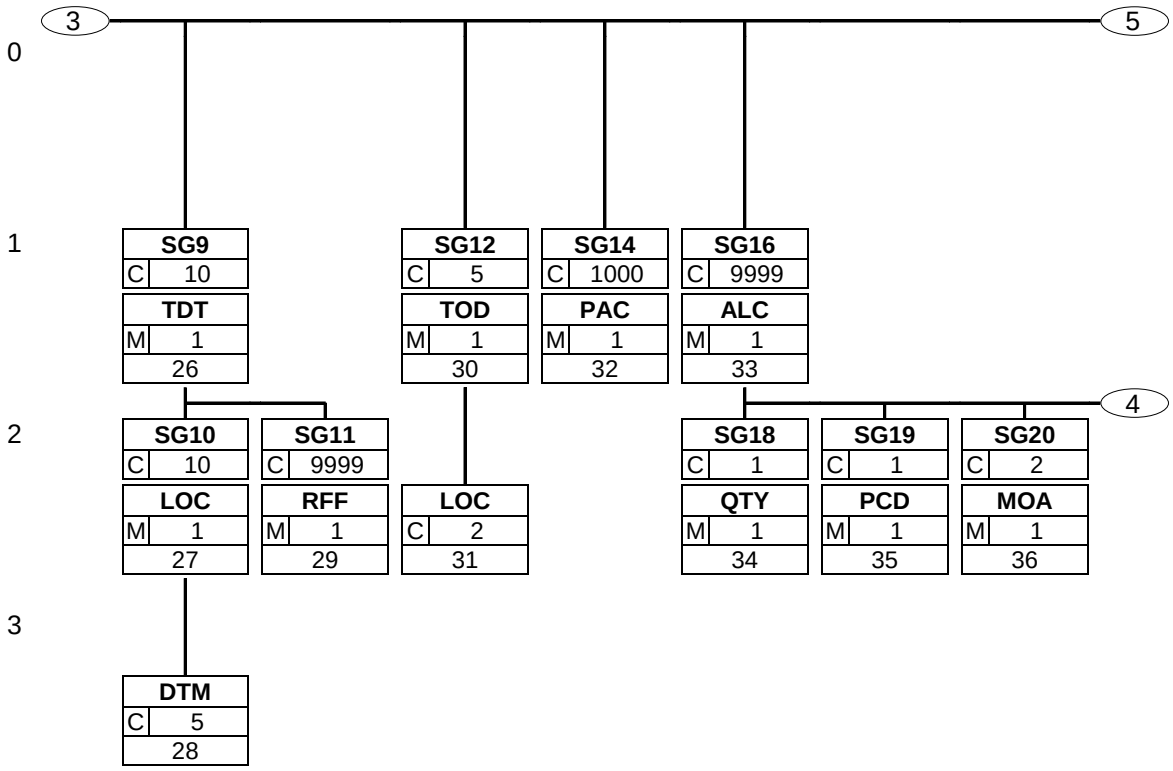

## 3. Branching Diagram

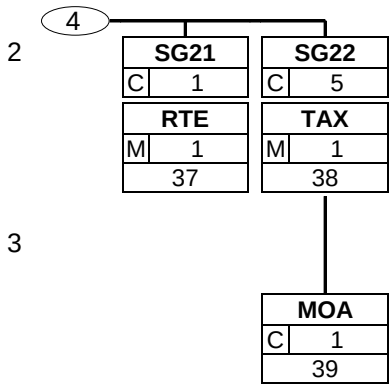

## 3. Branching Diagram

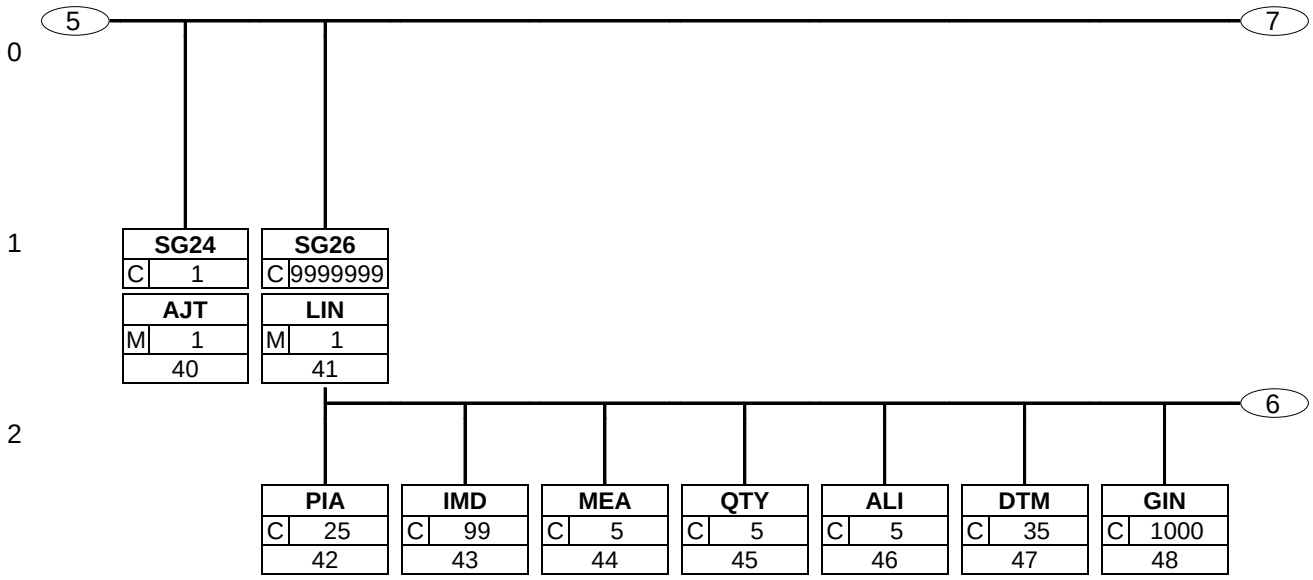

## 3. Branching Diagram

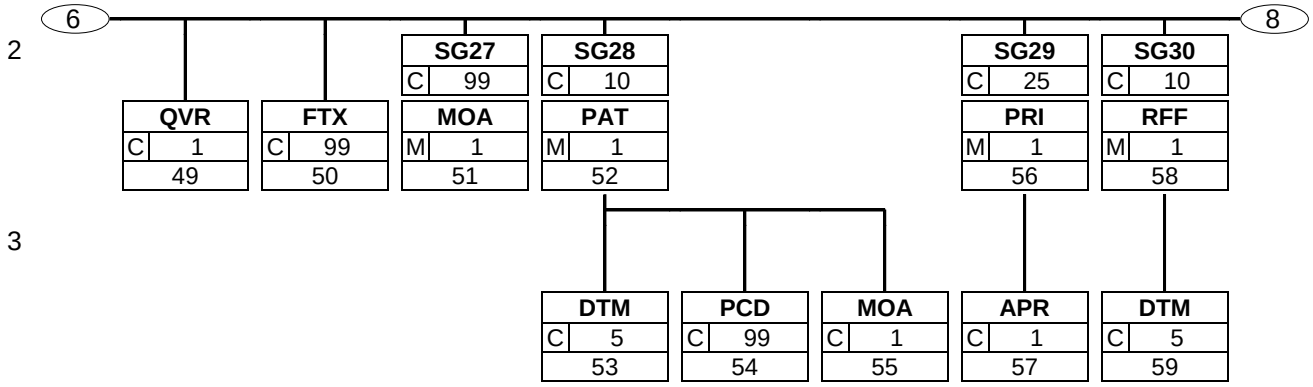

## 3. Branching Diagram

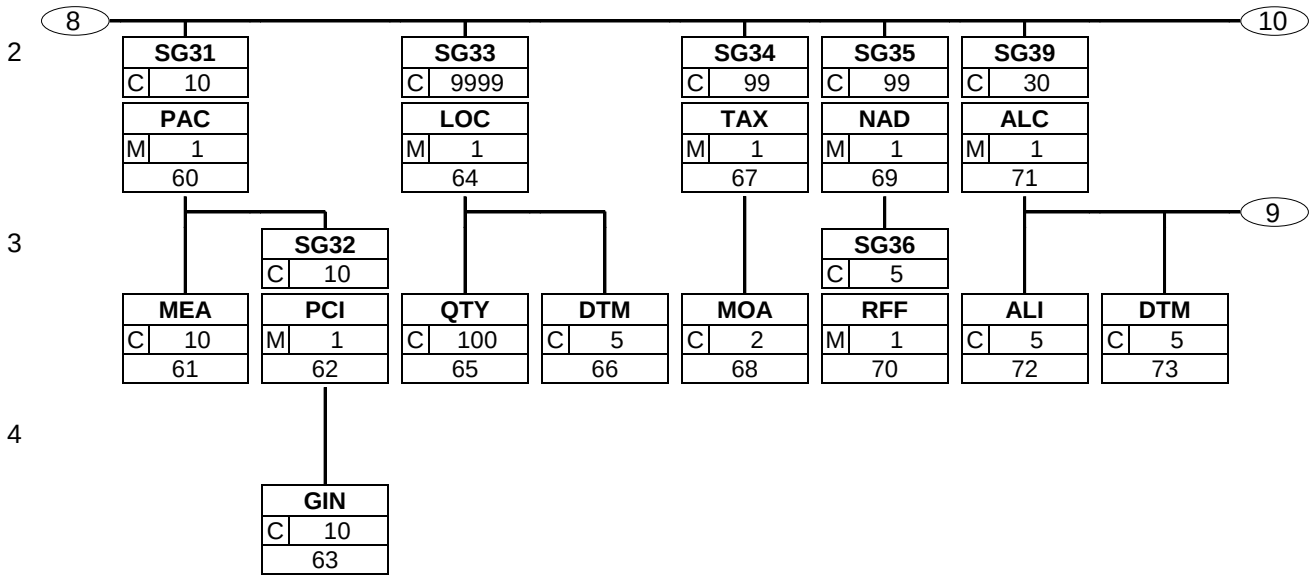

## 3. Branching Diagram

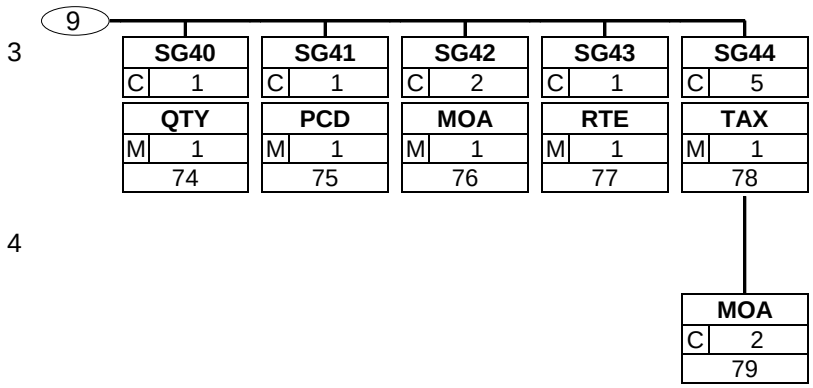

## 3. Branching Diagram

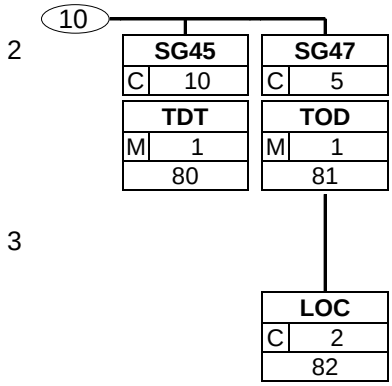

## 3. Branching Diagram

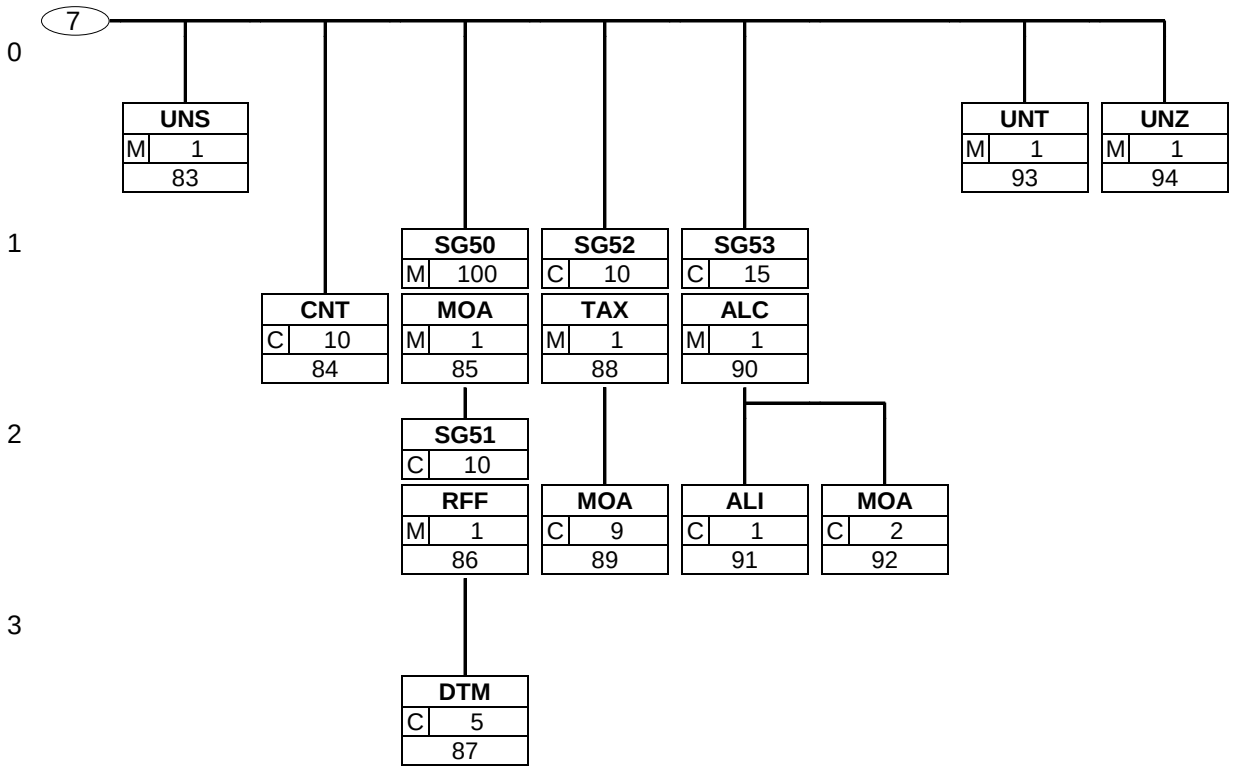

## 4. Segments Description

UNA - C 1 - Service string advice

This segment is used to inform the receiver of the interchange that a set of service string characters which are different to the default characters are being used.

UNB - M 1 - Interchange header

This segment is used to envelope the interchange, as well as to identify both, the party to whom the interchange is sent and the party who has sent the interchange. The principle of the UNB segment is the same as a physical envelope which covers one or more letters or documents, and which details, both the address where delivery is to take place and the address from where the envelope has come.

**Invoice Heading Section**

UNH - M 1 - Message header

This segment is used to head, identify and specify a message.

BGM - M 1 - Beginning of message

This segment is used to indicate the type and function of a message and to transmit the identifying number.

DTM - M 35 - Date/time/period

This segment is used to specify the date or period of the invoice. It may also be used to specify the date on which the goods were despatched, delivered, or received.

PAI - C 1 - Payment instructions

This segment allows the party issuing the Invoice to specify how they would like payment to be made.

ALI - C 5 - Additional information

This segment is used to specify any special conditions which apply to the goods being invoiced. The country of origin of all the products (if it is the same) may be specified here in the header section.

FTX - C 99 - Free text

This segment is used to provide free form or coded text information which applies to the complete invoice message.

**SG1** - C 99999 - **RFF-DTM**

A group of segments for giving references and where necessary, their dates, relating to the whole message, e.g. contract number, import/export license number, despatch advice number.

RFF - M 1 - Reference

This segment is used to specify references which relate to the whole invoice, for example, Purchase Order Numbers, Delivery Numbers, etc.

DTM - C 5 - Date/time/period

This segment is used to specify any dates related to the references given in the previous RFF segment.

**SG2** - C 99 - **NAD-FII-SG3-SG5**

A group of segments identifying the parties with associated information.

NAD - M 1 - Name and address

This segment is used to identify the trading parties involved in the invoice process. Identification of the buyer and supplier of goods and services is mandatory in the Invoice. Additionally, the issuer of the invoice and the invoicee must be identified if different from the buying and supplying parties. The consignee or delivery party needs to be specified if different to the buyer's address.

## 4. Segments Description

| | | | |
|---|---|---|---|
| FII | - C | 5 | - Financial institution information<br>This segment is used to identify financial institution information related to the party identified in the NAD segment. |
| **SG3** | - C | 9999 | - **RFF**<br>A group of segment for giving references only relevant to the specified party rather than the whole invoice. |
| RFF | - M | 1 | - Reference<br>This segment is used to specify reference numbers related to the party identified in the previous NAD segment. |
| **SG5** | - C | 5 | - **CTA-COM**<br>A group of segments giving contact details of the specific person or department within the party identified in the NAD segment. |
| CTA | - M | 1 | - Contact information<br>This segment is used to identify the department and/or person within the party specified in the NAD. |
| COM | - C | 5 | - Communication contact<br>This segment is used to identify the communications number and the type of communications used for the department person identified in the CTA segment. |
| **SG6** | - C | 5 | - **TAX-MOA**<br>A group of segments specifying tax related information. |
| TAX | - M | 1 | - Duty/tax/fee details<br>This segment is used to indicate the type, category, and rate of tax for the complete invoice. |
| MOA | - C | 1 | - Monetary amount<br>This segment is to be used to provide tax related monetary amounts relevant to the complete invoice. These amount should be added to any amounts specified in the detail section in order to calculate the total invoice tax amounts contained in the summary section. |
| **SG7** | - C | 99 | - **CUX-DTM**<br>A group of segments specifying the currencies and related dates/periods valid for the whole invoice. |
| CUX | - M | 1 | - Currencies<br>This segment is used to specify currency information for the complete invoice. |
| DTM | - C | 5 | - Date/time/period<br>This segment is used to specify the date on which a rate of exchange was quoted. |
| **SG8** | - C | 10 | - **PAT-DTM-PCD-MOA-PAI-FII**<br>A group of segments specifying the terms of payment applicable for the whole invoice. |
| PAT | - M | 1 | - Payment terms basis<br>This segment is used by the issuer of the invoice to specify the payment terms for the complete invoice. |
| DTM | - C | 5 | - Date/time/period<br>This segment is used to specify any dates associated with the payment terms for the invoice. |
| PCD | - C | 1 | - Percentage details<br>This segment is used to specify percentages which will be allowed or charged if the invoicee pays (does not pay) to terms. |

## 4. Segments Description

| | | | |
|---|---|---|---|
| MOA | - C | 1 | - Monetary amount<br>This segment is used to specify monetary values which will be allowed or charged if the invoicee pays (does not pay) to terms. |
| PAI | - C | 1 | - Payment instructions<br>This segment is used to specify payment instructions related to payment terms. |
| FII | - C | 1 | - Financial institution information<br>This segment is used to identify the receiving financial institution and account holder number, related to the payment means. |
| **SG9** | - C | 10 | - **TDT-SG10-SG11**<br>A group of segments identifying the mode and means of transport, location and relevant dates and times for transportation, relating to the whole invoice. |
| TDT | - M | 1 | - Details of transport<br>This segment is used to specify transport services provided for the delivery of the invoiced line items, such as express transport services. |
| **SG10** | - C | 10 | - **LOC-DTM**<br>A group of segments giving the location and date/time information relative to the transportation. |
| LOC | - M | 1 | - Place/location identification<br>This segment is used to identify locations related to the details of transport. |
| DTM | - C | 5 | - Date/time/period<br>This segment is used to specify dates related to the above location. |
| **SG11** | - C | 9999 | - **RFF**<br>A group of segments to allow reference to transport details. |
| RFF | - M | 1 | - Reference |
| **SG12** | - C | 5 | - **TOD-LOC**<br>A group of segments indicating the terms of delivery for the whole invoice. |
| TOD | - M | 1 | - Terms of delivery or transport<br>This segment is used to specify the terms of delivery for the complete invoice. |
| LOC | - C | 2 | - Place/location identification<br>This segment is used to identify the location where the terms of delivery apply. |
| **SG14** | - C | 1000 | - **PAC**<br>A group of segments identifying the packaging for goods referenced by the whole invoice. |
| PAC | - M | 1 | - Package<br>This segment is used to enable the invoice message to be used as valued despatch advice message by detailing the total count of each package type being invoiced. |
| **SG16** | - C | 9999 | - **ALC-SG18-SG19-SG20-SG21-SG22**<br>A group of segments specifying allowances and charges for the whole invoice. Allowances and charges in the heading section of a message are independent from those in the detail section, e.g. ALC at detail level does not override ALC at heading level. |
| ALC | - M | 1 | - Allowance or charge<br>This segment is used to indicate any Allowances or Charges applicable to the total invoice, e.g. packaging costs. |
| **SG18** | - C | 1 | - **QTY**<br>A group of segments specifying the quantity of the allowance or charge with its measure unit specifier. |

## 4. Segments Description

QTY - M 1 - Quantity

This segment is used to specify any quantity discounts or charges for the current ALC segment group.

**SG19** - C 1 - **PCD**

A group of segments specifying the percentage for the allowance or charge.

PCD - M 1 - Percentage details

This segment is used to specify any percentage discounts or charges for the current ALC segment group.

**SG20** - C 2 - **MOA**

A group of segments specifying a monetary amount for an allowance or charge.

MOA - M 1 - Monetary amount

This segment is used to specify any monetary discounts or charges for the current ALC segment group.

**SG21** - C 1 - **RTE**

A group of segments specifying the rate per unit and basis to which the allowance or charge applies, e.g. the allowance/charge amount is 3 EUR per 10 tons.

RTE - M 1 - Rate details

This segment is used to specify rate discounts or charges for the current ALC segment group.

**SG22** - C 5 - **TAX-MOA**

A group of segments specifying tax related information for the allowance or charge.

TAX - M 1 - Duty/tax/fee details

This segment is used to signify whether the allowances and charges specified in SG16 are subject to tax.

MOA - C 1 - Monetary amount

This segment is used to indicate tax or duty amount for the tax rates specified in the previous TAX segment.

**SG24** - C 1 - **AJT**

A segment group to give information about adjustment.

AJT - M 1 - Adjustment details

This segment is used to indicate the reason for an adjustment to the current document.

**Invoice Detail Section**

**SG26** - C 9999999 - **LIN-PIA-IMD-MEA-QTY-ALI-DTM-GIN-QVR-FTX-SG27-SG28-SG29-SG30-SG31-SG33-SG34-SG35-SG39-SG45-SG47**

A group of segments providing details of the individual invoiced items. There must be at least one occurrence of Segment group 26 within an invoice, but not necessarily in a credit note or a debit note. This Segment group may be repeated to give sub-line details.

LIN - M 1 - Line item

This segment is used to identify the item being invoiced.

PIA - C 25 - Additional product id

This segment is used to specify additional or substitutional item identification codes such as a buyer's or supplier's item number.

IMD - C 99 - Item description

This segment is used to provide a description for the current line item.

## 4. Segments Description

| | | | |
|---|---|---|---|
| MEA | - C | 5 | - Measurements<br>This segment is used to specify the physical dimensions, storage limitations, or transport equipment limitations of a product. |
| QTY | - C | 5 | - Quantity<br>This segment is used to specify quantities related to the current line item. |
| ALI | - C | 5 | - Additional information<br>This segment is used to indicate special conditions or the country of origin of the current line item. |
| DTM | - C | 35 | - Date/time/period<br>This segment is used to specify the date of despatch, delivery, or receipt of the current line item. |
| GIN | - C | 1000 | - Goods identity number<br>This segment is used to indicate a serial number or a range of numbers. |
| QVR | - C | 1 | - Quantity variances<br>This segment is used to specify any variances between what was ordered, what was shipped/despatched and what is being invoiced. |
| FTX | - C | 99 | - Free text<br>This segment is used to provide free form or coded text information which applies to the current line item. |
| **SG27** | - C | 99 | - **MOA**<br>A group of segments specifying any monetary amounts relating to the products and when necessary a currency. |
| MOA | - M | 1 | - Monetary amount<br>This segment is used to specify monetary amounts related to the current line item. |
| **SG28** | - C | 10 | - **PAT-DTM-PCD-MOA**<br>A group of segments specifying the terms of payment for the line item where this is different to that specified in the heading section. |
| PAT | - M | 1 | - Payment terms basis<br>This segment is used to identify specific payment terms for the current line item. |
| DTM | - C | 5 | - Date/time/period<br>This segment is used to specify any dates associated with the payment terms provided in the previous PAT segment. |
| PCD | - C | 99 | - Percentage details<br>This segment specifies the penalty or discount percentage applicable for the terms of payment defined in the PAT segment. |
| MOA | - C | 1 | - Monetary amount<br>This segment specifies the penalty or discount monetary amount applicable for the terms of payment defined in the PAT segment. |
| **SG29** | - C | 25 | - **PRI-APR**<br>A group of segments identifying the relevant pricing information for the goods or services invoiced. |
| PRI | - M | 1 | - Price details<br>This segment is used to specify price information for the current line item. |
| APR | - C | 1 | - Additional price information<br>This segment is used to provide a reason for a change in the price specified in the PRI segment. |
| **SG30** | - C | 10 | - **RFF-DTM**<br>A group giving references and where necessary, their dates, relating to the line item. |

## 4. Segments Description

RFF - M 1 - Reference

This segment is used to provide references specific to the line item, and overrides any global references provided in the heading section of the invoice when the same qualifier is used.

DTM - C 5 - Date/time/period

This segment is used to specify dates and times pertinent to the previous RFF segment.

**SG31** - C 10 - **PAC-MEA-SG32**

A group of segments identifying the packaging, physical dimensions, and marks and numbers for goods referenced in the line item.

PAC - M 1 - Package

This segment is used to specify the number and type of packages for the current line item.

MEA - C 10 - Measurements

This segment is used to specify any measurements related to the packaging defined in the previous PAC segment.

**SG32** - C 10 - **PCI-GIN**

A group of segments specifying the markings and labels on individual physical units.

PCI - M 1 - Package identification

This segment is used to identify markings on the packaging of the product being invoiced.

GIN - C 10 - Goods identity number

This segment is used to provide the serial shipping container code (SSCC) marked on the packaging of the products being invoiced.

**SG33** - C 9999 - **LOC-QTY-DTM**

A group of segments specifying destination and quantity details for consignments involving multi-destination deliveries for a specified line item.

LOC - M 1 - Place/location identification

This segment is used to identify multiple delivery locations for the current line item.

QTY - C 100 - Quantity

This segment is used to specify the quantities related to the location identified in the preceding LOC segment.

DTM - C 5 - Date/time/period

This segment is used to specify the date/time on which the delivery took (will take) place to the location identified in preceeding LOC segment.

**SG34** - C 99 - **TAX-MOA**

A group of segments specifying tax related information for the line item.

TAX - M 1 - Duty/tax/fee details

This segment is used to specify tax details for the line item being invoiced.

MOA - C 2 - Monetary amount

This segment is used to specify in monetary terms the amount of tax due on the current line item.

**SG35** - C 99 - **NAD-SG36**

A group of segments identifying the parties with associated information, relevant to the line item only.

NAD - M 1 - Name and address

This segment is used to identify parties which are valid only for the current line item. Parties identified here override those specified in the NAD segment at heading level when the same qualifier is used.

## 4. Segments Description

**SG36** - C 5 - **RFF**

A group of segment for giving references only relevant to the specified party rather than the whole line item.

RFF - M 1 - Reference

This segment is used to specify references related to the party identified in the NAD at line level.

**SG39** - C 30 - **ALC-ALI-DTM-SG40-SG41-SG42-SG43-SG44**

A group of segments specifying allowances and charges for the line item. Allowances and charges in the heading section of a message are independent from those in the detail section, e.g. ALC at detail level does not override ALC at heading level.

ALC - M 1 - Allowance or charge

This segment is used to specify any allowances or charges which apply only to the line item being invoiced.

ALI - C 5 - Additional information

This segment is used to indicate any special conditions applicable to the allowances or charges detailed at line level.

DTM - C 5 - Date/time/period

This segment is used to provide any dates or periods related to the allowances or charges of the current line item.

**SG40** - C 1 - **QTY**

A group of segments specifying the quantity of the allowance or charge with its measure unit specifier.

QTY - M 1 - Quantity

The segment is used to specify quantity discounts or charges for the line being invoiced.

**SG41** - C 1 - **PCD**

A group of segments specifying the percentage for the allowance or charge.

PCD - M 1 - Percentage details

This segment is used to specify percentage discounts or charges for the line item being invoiced.

**SG42** - C 2 - **MOA**

A group of segments specifying a monetary amount for an allowance or charge.

MOA - M 1 - Monetary amount

This segment is used to specify monetary allowances/charges for the line item being invoiced.

**SG43** - C 1 - **RTE**

A group of segments specifying the rate per unit and basis to which the allowance or charge applies, e.g. The allowance/charge amount is 3 EUR per 10 tons.

RTE - M 1 - Rate details

This segment is used to specify allowance or charge rates for the line item being invoiced.

**SG44** - C 5 - **TAX-MOA**

A group of segments specifying tax related information for the allowance or charge.

TAX - M 1 - Duty/tax/fee details

This segment is used to identify any taxes or duties which apply to the allowances or charges at LIN level.

## 4. Segments Description

MOA - C 2 - Monetary amount

This segment is used to specify in monetary terms the amount of tax due for the allowances and charges for the current line item.

**SG45** - C 10 - **TDT**

A group of segments identifying the mode and means of transport relating to the line item, where this is different to or not specified within the heading section.

TDT - M 1 - Details of transport

This segment is used to specify the transport means used for the product being invoiced. This segment is only used if the transport means differ from those specified in the message header.

**SG47** - C 5 - **TOD-LOC**

A group of segments indicating the terms of delivery for the line item where this is different to or not specified within the heading section.

TOD - M 1 - Terms of delivery or transport

This segment is used to specify the terms of delivery for the current line item.

LOC - C 2 - Place/location identification

This segment is used to identify the location where the terms of delivery apply.

**Invoice Summary Section**

UNS - M 1 - Section control

This segment is used to identify the break between the message detail and message trailer sections.

CNT - C 10 - Control total

This segment is used to provide message control information for checking on the message receiver's in-house system.

**SG50** - M 100 - **MOA-SG51**

A group of segments giving total amounts for the whole invoice and - if relevant - detailing amounts pre-paid with relevant references.

MOA - M 1 - Monetary amount

This segment is used to detail prepaid amounts, or total monetary values due for the entire invoice.

**SG51** - C 10 - **RFF-DTM**

A group of segments for giving references and where necessary, their dates, relating e.g. amounts prepaid number.

RFF - M 1 - Reference

This segment is used to specify any references related to the message totals information.

DTM - C 5 - Date/time/period

This segment is used to provide any dates related to the references specified in the previous RFF segment.

**SG52** - C 10 - **TAX-MOA**

A group of segments specifying taxes totals for the invoice.

TAX - M 1 - Duty/tax/fee details

This segment is used to specify the total taxes or duties due on the complete invoice.

MOA - C 9 - Monetary amount

This segment is used to specify the tax amounts due, for the tax rate specified in the TAX segment, covering the whole invoice.

## 4. Segments Description

| | | |
|---|---|---|
| **SG53** - C 15 | - | **ALC-ALI-MOA** |
| | | A group of segments specifying allowances and charges summary totals for the invoice. |
| ALC - M 1 | - | Allowance or charge |
| | | This segment is used to specify per allowance or charge type totals for each allowances and charges. Allowances and charges detailed both at the header level and on individual product lines are summarized here. |
| ALI - C 1 | - | Additional information |
| | | This segment is used to indicate any special conditions applicable to the allowances or charges at summary level. |
| MOA - C 2 | - | Monetary amount |
| | | This segment is used to specify the total monetary value per allowance or charge type. |
| UNT - M 1 | - | Message trailer |
| | | This segment is a mandatory UN/EDIFACT segment. It must always be the last segment in the message. |
| UNZ - M 1 | - | Interchange trailer |
| | | This segment is used to provide the trailer of an interchange. |

## 5. Segments Layout

This section describes each segment used in the EANCOM® Invoice message. The original EDIFACT segment layout is listed. The appropriate comments relevant to the EANCOM® subset are indicated.

***Notes:***

1. The segments are presented in the sequence in which they appear in the message. The segment or segment group tag is followed by the (M)andatory / (C)onditional indicator, the maximum number of occurrences and the segment description.

2. Reading from left to right, in column one, the data element tags and descriptions are shown, followed by in the second column the EDIFACT status (M or C), the field format, and the picture of the data elements. These first pieces of information constitute the original EDIFACT segment layout.

   Following the EDIFACT information, EANCOM® specific information is provided in the third, fourth, and fifth columns. In the third column a status indicator for the use of (C)onditional EDIFACT data elements (see 2.1 through 2.3 below), in the fourth column the restricted indicator (see point 3 on the following page), and in the fifth column notes and code values used for specific data elements in the message.

2.1 (M)andatory data elements in EDIFACT segments retain their status in EANCOM®.

2.2 Additionally, there are five types of status for data elements with a (C)onditional EDIFACT status, whether for simple, component or composite data elements. These are listed below and can be identified when relevant by the following abbreviations:

| | | |
|---|---|---|
| - REQUIRED | **R** | Indicates that the entity is required and must be sent. |
| - ADVISED | **A** | Indicates that the entity is advised or recommended. |
| - DEPENDENT | **D** | Indicates that the entity must be sent in certain conditions, as defined by the relevant explanatory note. |
| - OPTIONAL | **O** | Indicates that the entity is optional and may be sent at the discretion of the user. |
| - NOT USED | **N** | Indicates that the entity is not used and should be omitted. |

2.3 If a composite is flagged as **N, NOT USED**, all data elements within that composite will have blank status indicators assigned to them.

3. Status indicators detailed in the fourth column which directly relate to the code values detailed in the fifth **column** may have two values:

| | | |
|---|---|---|
| - RESTRICTED | ***** | A data element marked with an asterisk (*) in the fourth column indicates that the listed codes in column five are the only codes available for use with this data element, in this segment, in this message. |
| - OPEN | | All data elements where coded representation of data is possible and a restricted set of code values is not indicated are open (no asterisk in fourth column). The available codes are listed in the EANCOM® Data Elements and Code Sets Directory. Code values may be given as examples or there may be a note on the format or type of code to be used. |

4. Different colours are used for the code values in the segment details: restricted codes are in red and open codes in blue.

## 5. Segments Layout

Segment number: 1

| **UNA** - C 1 - Service string advice | | | | | |
|---|---|---|---|---|---|
| Function:<br>The service string advice shall begin with the upper case characters UNA immediately followed by six characters in the order shown below. The space character shall not be used in positions 010, 020, 040, 050 or 060. The same character shall not be used in more than one position of the UNA. | | | | | |
| | | EDIFACT | GS1 | * | Description |
| UNA1 | Component data element separator | M an1 | **M** | * | Used as a separator between component data elements contained within a composite data element (default value: ":") |
| UNA2 | Data element separator | M an1 | **M** | * | Used to separate two simple or composite data elements (default value: "+" ) |
| UNA3 | Decimal mark | M an1 | **M** | * | Used to indicate the character used for decimal notation (default value:".") |
| UNA4 | Release character | M an1 | **M** | * | Used to restore any service character to its original specification (value: "?"). |
| UNA5 | Repetition separator | M an1 | **M** | * | Used to indicate the character used for repetition separation (value: " * " ). |
| UNA6 | Segment terminator | M an1 | **M** | * | Used to indicate the end of segment data (default value: " ' ") |
| Segment Notes:<br>This segment is used to inform the receiver of the interchange that a set of service string characters which are different to the default characters are being used.<br>When using the default set of service characters, the UNA segment need not be sent. If it is sent, it must immediately precede the UNB segment and contain the four service string characters (positions UNA1, UNA2, UNA4 and UNA6) selected by the interchange sender.<br>Regardless of whether or not all of the service string characters are being changed every data element within this segment must be filled, (i.e., if some default values are being used with user defined ones, both the default and user defined values must be specified).<br>When expressing the service string characters in the UNA segment, it is not necessary to include any element separators.<br>The use of the UNA segment is required when using a character set other than level A.<br>UNA:+.?*' | | | | | |

## 5. Segments Layout

Segment number: 2

| **UNB** | - M | 1 - Interchange header |
|---|---|---|

Function:

To identify an interchange.

Notes:
1. S001/0002, shall be '4' to indicate this version of the syntax.
2. The combination of the values carried in data elements S002, S003 and 0020 shall be used to identify uniquely the interchange, for the purpose of acknowledgement.

| | | EDIFACT | GS1 | * | Description |
|---|---|---|---|---|---|
| S001 | SYNTAX IDENTIFIER | M | **M** | | See Part I chapter 5.2.7 and segment notes. |
| 0001 | Syntax identifier | M a4 | **M** | * | UNOA = UN/ECE level A<br>UNOB = UN/ECE level B<br>UNOC = UN/ECE level C<br>UNOD = UN/ECE level D<br>UNOE = UN/ECE level E<br>UNOF = UN/ECE level F<br>UNOG = UN/ECE level G<br>UNOH = UN/ECE level H<br>UNOI = UN/ECE level I<br>UNOJ = UN/ECE level J<br>UNOK = UN/ECE level K<br>UNOW = UN/ECE level W<br>UNOX = UN/ECE level X<br>UNOY = UN/ECE level Y |
| 0002 | Syntax version number | M an1 | **M** | * | 4 = Version 4 |
| 0080 | Service code list directory version number | C an..6 | **N** | | |
| 0133 | Character encoding, coded | C an..3 | **N** | | |
| S002 | INTERCHANGE SENDER | M | **M** | | |
| 0004 | Interchange sender identification | M an..35 | **M** | | GLN (n13) |
| 0007 | Identification code qualifier | C an..4 | **R** | * | 14 = GS1 |
| 0008 | Interchange sender internal identification | C an..35 | **O** | | |
| 0042 | Interchange sender internal sub-identification | C an..35 | **N** | | |
| S003 | INTERCHANGE RECIPIENT | M | **M** | | |
| 0010 | Interchange recipient identification | M an..35 | **M** | | GLN (n13) |
| 0007 | Identification code qualifier | C an..4 | **R** | * | 14 = GS1 |
| 0014 | Interchange recipient internal identification | C an..35 | **O** | | |
| 0046 | Interchange recipient internal sub-identification | C an..35 | **N** | | |
| S004 | DATE AND TIME OF PREPARATION | M | **M** | | |
| 0017 | Date | M n8 | **M** | | CCYYMMDD |
| 0019 | Time | M n4 | **M** | | HHMM |
| 0020 | Interchange control reference | M an..14 | **M** | | Unique reference identifying the interchange. Created |

## 5. Segments Layout

Segment number: 2

| | | EDIFACT | GS1 | * | Description |
|---|---|---|---|---|---|
| | | | | | by the interchange sender. |
| S005 | RECIPIENT REFERENCE/ PASSWORD DETAILS | C | **O** | | |
| 0022 | Recipient reference/password | M an..14 | **M** | | |
| 0025 | Recipient reference/password qualifier | C an2 | **O** | | |
| 0026 | Application reference | C an..14 | **O** | | Message identification if the interchange contains only one type of message. |
| 0029 | Processing priority code | C a1 | **O** | | A = Highest priority |
| 0031 | Acknowledgement request | C n1 | **O** | | 1 = Requested |
| 0032 | Interchange agreement identifier | C an..35 | **O** | * | EANCOM..... |
| 0035 | Test indicator | C n1 | **O** | | 1 = Interchange is a test |

Segment Notes:

This segment is used to envelope the interchange, as well as to identify both, the party to whom the interchange is sent and the party who has sent the interchange. The principle of the UNB segment is the same as a physical envelope which covers one or more letters or documents, and which details, both the address where delivery is to take place and the address from where the envelope has come.
S001: The character encoding specified in basic code table of ISO/IEC 646 (7-bit coded character set for information interchange) shall be used for the interchange service string advice (if used) and up to and including the composite data element S001 'Syntax identifier' in the interchange header. The character repertoire used for the characters in an interchange shall be identified from the code value of data element 0001 in S001 'Syntax identifier' in the interchange header. The character repertoire identified does not apply to objects and/or encrypted data.
The default encoding technique for a particular repertoire shall be the encoding technique defined by its associated character set specification.
DE 0001: The recommended (default) character set for use in EANCOM® for international exchanges is character set A (UNOA). Should users wish to use character sets other than A, an agreement on which set to use should be reached on a bilateral basis before communications begin.
DE 0004, 0008, 0010 and 0014: Within EANCOM® the use of the Global Location Number (GLN) is recommended for the identification of the interchange sender and recipient.
DE 0008: Identification (e.g. a division) specified by the sender of the interchange, to be included if agreed, by the recipient in response interchanges, to facilitate internal routing.
DE 0014: The address for routing, provided beforehand by the interchange recipient, is used by the interchange sender to inform the recipient of the internal address, within the latter's systems, to which the interchange should be routed. It is recommended that the GLN be used for this purpose.
DE 0007: Identification (e.g. a division) specified by the recipient of the interchange, to be included if agreed, by the sender in response interchanges, to facilitate internal routing.
DE S004: The date and time specified in this composite should be the date and time at which the interchange sender prepared the interchange. This date and time may not necessarily be the same as the date and time of contained messages.
DE 0020: The interchange control reference number is generated by the interchange sender and is used to identify uniquely each interchange. Should the interchange sender wish to re-use interchange control reference numbers, it is recommended that each number be preserved for at least a period of three months before being re-used. In order to guarantee uniqueness, the interchange control reference number should always be linked to the interchange sender's identification (DE 0004).
DE S005: The use of passwords must first be agreed bilaterally by the parties exchanging the interchange.
DE 0026: This data element is used to identify the application, on the interchange recipient's system, to which the interchange is directed. This data element may only be used if the interchange contains only one type of message, (e.g. only invoices). The reference used in this data element is assigned by the interchange sender.
DE 0031: This data element is used to indicate whether an acknowledgement to the interchange is required. The EANCOM® APERAK or CONTRL message should be used to provide acknowledgement of interchange receipt. In addition, the EANCOM® CONTRL message may be used to indicate when an interchange has been rejected

## 5. Segments Layout

Segment number: 2

due to syntax errors.
DE 0032: This data element is used to identify any underlying agreements which control the exchange of data. Within EANCOM® , the identity of such agreements must start with the letters 'EANCOM', the remaining characters within the data element being filled according to bilateral agreements.

UNB+UNOC:4+5412345678908:14+8798765432106:14+20020102:1000+12345555+++++EANCOMREF 52'

## 5. Segments Layout

Segment number: 3

**UNH** - M 1 - Message header

Function:

To head, identify and specify a message.

Notes:
1. Data element S009/0057 is retained for upward compatibility. The use of S016 and/or S017 is encouraged in preference.
2. The combination of the values carried in data elements 0062 and S009 shall be used to identify uniquely the message within its group (if used) or if not used, within its interchange, for the purpose of acknowledgement.

| | | EDIFACT | GS1 | * | Description |
|---|---|---|---|---|---|
| 0062 | Message reference number | M an..14 | **M** | | Sender's unique message reference. Sequence number of messages in the interchange. DE 0062 in UNT will have the same value. Generated by the sender. |
| S009 | MESSAGE IDENTIFIER | M | **M** | | |
| 0065 | Message type | M an..6 | **M** | * | INVOIC = Invoice message |
| 0052 | Message version number | M an..3 | **M** | * | D = Draft version/UN/EDIFACT Directory |
| 0054 | Message release number | M an..3 | **M** | * | 01B = Release 2001 - B |
| 0051 | Controlling agency, coded | M an..3 | **M** | * | UN = UN/CEFACT |
| 0057 | Association assigned code | C an..6 | **R** | * | EAN011 = GS1 version control number (GS1 Permanent Code)<br>Indicates that the message is the EANCOM version 011 of the UNSM Invoice. |
| 0110 | Code list directory version number | C an..6 | **O** | | This data element can be used to identify the codelist agreed by the interchange partners, e.g. EAN001 = EANCOM 2002 S4 codelist released on 01.12.2002 by GS1. |
| 0113 | Message type sub-function identification | C an..6 | **N** | | |
| 0068 | Common access reference | C an..35 | **N** | | |
| S010 | STATUS OF THE TRANSFER | C | **N** | | |
| 0070 | Sequence of transfers | M n..2 | | | |
| 0073 | First and last transfer | C a1 | | | |
| S016 | MESSAGE SUBSET IDENTIFICATION | C | **N** | | |
| 0115 | Message subset identification | M an..14 | | | |
| 0116 | Message subset version number | C an..3 | | | |
| 0118 | Message subset release number | C an..3 | | | |
| 0051 | Controlling agency, coded | C an..3 | | | |
| S017 | MESSAGE IMPLEMENTATION GUIDELINE IDENTIFICATION | C | **N** | | |
| 0121 | Message implementation guideline identification | M an..14 | | | |
| 0122 | Message implementation guideline version number | C an..3 | | | |

## 5. Segments Layout

Segment number: 3

| | | EDIFACT | GS1 | * | Description |
|---|---|---|---|---|---|
| 0124 | Message implementation guideline release number | C an..3 | | | |
| 0051 | Controlling agency, coded | C an..3 | | | |
| S018 | SCENARIO IDENTIFICATION | C | **N** | | |
| 0127 | Scenario identification | M an..14 | | | |
| 0128 | Scenario version number | C an..3 | | | |
| 0130 | Scenario release number | C an..3 | | | |
| 0051 | Controlling agency, coded | C an..3 | | | |

Segment Notes:

This segment is used to head, identify and specify a message.
DE's 0065, 0052, 0054, and 0051: Indicate that the message is a UNSM Invoice based on the D.01B directory under the control of the United Nations.

Example:
UNH+1+INVOIC:D:01B:UN:EAN011'

## 5. Segments Layout

Segment number: 4

| **BGM** - M 1 - Beginning of message | | | | | |
|---|---|---|---|---|---|
| Function:<br>To indicate the type and function of a message and to transmit the identifying number. | | | | | |
| | | EDIFACT | GS1 | * | Description |
| C002 | DOCUMENT/MESSAGE NAME | C | **R** | | |
| 1001 | Document name code | C an..3 | **R** | * | 67 = Commercial dispute<br>82 = Metered services invoice<br>83 = Credit note related to financial adjustments<br>84 = Debit note related to financial adjustments<br>130 = Invoicing data sheet<br>325 = Proforma invoice<br>380 = Commercial invoice<br>381 = Credit note - goods and services<br>382 = Commission note<br>383 = Debit note - goods and services<br>384 = Corrected invoice<br>385 = Consolidated invoice<br>386 = Prepayment invoice<br>388 = Tax invoice<br>389 = Self-billed invoice<br>390 = Delcredere invoice<br>393 = Factored invoice<br>261 = Self billed credit note<br>262 = Consolidated credit note - goods and services<br>308 = Delcredere credit note<br>527 = Self billed debit note<br>It is of critical importance to use the appropriate document name qualifier relevant to the message. Code value 325 may be used to provide valued despatch information. Before using code value '384', it is advised to check with the local tax authorities the legality of using corrected invoices, as some countries may not allow their use. |
| 1131 | Code list identification code | C an..17 | **N** | | |
| 3055 | Code list responsible agency code | C an..3 | **N** | | |
| 1000 | Document name | C an..35 | **O** | | |
| C106 | DOCUMENT/MESSAGE IDENTIFICATION | C | **R** | | |
| 1004 | Document identifier | C an..35 | **R** | | Invoice Number assigned by document sender.<br>For global unique identification of documents Global Document Type Identifier (GDTI) is available. |
| 1056 | Version identifier | C an..9 | **N** | | |
| 1060 | Revision identifier | C an..6 | **O** | | |
| 1225 | Message function code | C an..3 | **R** | * | 1 = Cancellation<br>5 = Replace<br>7 = Duplicate<br>9 = Original<br>31 = Copy<br>43 = Additional transmission |

## 5. Segments Layout

Segment number: 4

| | EDIFACT | GS1 | * | Description |
|---|---|---|---|---|
| | | | | 55 = Notification only<br>The message function, coded is a critical data element in this segment. It applies to all data indicated in the message. Consequently, one separate message has to be provided per type of function required. The following definitions apply for the restricted codes:<br>1 = Cancellation - The current invoice is being cancelled. A new invoice with its own invoice number will be raised to take its place. It is recommended that if an invoice is incorrect it must be cancelled and a new one issued or a correcting credit/debit note issued referencing the incorrect invoice.<br>5 = Replace - To cancel and replace a previously sent message identified in the RFF segment. When a buyer issues a pro-forma invoice to cover a transaction the supplier on receipt of this pro-forma issues a replacement to take its place.<br>7 = Duplicate - Re-transmission involving the same parties, on the specific request of the receiver.<br>9 = Original - An indication to the receiver that this invoice is an original invoice, i.e., not a replacement or duplicate.<br>31 = Copy - A copy of an invoice for a third party for information purposes.<br>43 = Additional transmission - Message already transmitted via another communication channel. This transmission is to provide electronically processable data only. |
| 4343 Response type code | C an..3 | **O** | * | AB = Message acknowledgement<br>NA = No acknowledgement needed |

Segment Notes:

This segment is used to indicate the type and function of a message and to transmit the identifying number.

Example:
BGM+380+432097+9'
This example identifies the document as being an original commercial invoice using the code value 380. The document has the reference number 432097.

BGM+82+MSI5422'
This example identifies the document as being a metered services invoice using the code value 82. The document has the reference number MSI5422.

## 5. Segments Layout

Segment number: 5

| **DTM** - M 35 - Date/time/period | | | | | |
|---|---|---|---|---|---|
| Function:<br>To specify date, and/or time, or period. | | | | | |
| | | EDIFACT | GS1 | * | Description |
| C507 | DATE/TIME/PERIOD | M | **M** | | |
| 2005 | Date or time or period function code qualifier | M an..3 | **M** | * | 1 = Service completion date/time, actual<br>11 = Despatch date and/or time<br>35 = Delivery date/time, actual<br>36 = Expiry date<br>50 = Goods receipt date/time<br>137 = Document/message date/time<br>200 = Pick-up/collection date/time of cargo<br>263 = Invoicing period<br>325 = Tax period<br>454 = Accounting value date<br>44E = Connection date/time (GS1 Temporary Code)<br>Dependency Notes:<br>If there is a legal requirement to have the date of creation of the invoice from the accounting application system specified, then additionally code value '454' should be used. |
| 2380 | Date or time or period value | C an..35 | **R** | | |
| 2379 | Date or time or period format code | C an..3 | **R** | | 102 = CCYYMMDD<br>203 = CCYYMMDDHHMM<br>718 = CCYYMMDD-CCYYMMDD |

Segment Notes:

This segment is used to specify the date or period of the invoice. It may also be used to specify the date on which the goods were despatched, delivered, or received.
DE 2005: Identification of the 'Document/message date/time' (code value 137) is mandatory in an EANCOM message.

Example:
DTM+137:20021008:102'
The document date is the 8th of October 2002.

DTM+35:200210151430:203'
The invoice relates to a delivery made on the 15th of October 2002 at 2:30pm.

## 5. Segments Layout

Segment number: 6

| **PAI** | - C | 1 - Payment instructions | | | |
|---|---|---|---|---|---|
| Function:<br>To specify the instructions for payment. | | | | | |
| | | EDIFACT | GS1 | * | Description |
| C534 | PAYMENT INSTRUCTION DETAILS | M | **M** | | |
| 4439 | Payment conditions code | C an..3 | **O** | | 1 = Direct payment<br>65 = Reverse factoring<br>OA = Open account (GS1 Temporary Code) |
| 4431 | Payment guarantee means code | C an..3 | **O** | | 20 = Goods as security |
| 4461 | Payment means code | C an..3 | **O** | | 42 = Payment to bank account<br>60 = Promissory note<br>70 = Bill drawn by the creditor on the debtor<br>10E = Payment terms defined in the Commercial Account Summary (GS1 Temporary Code)<br>13E = Payment terms defined in consolidated invoice (GS1 Temporary Code)<br>Code value '10E, Payment terms defined in the Commercial Account Summary' is used to indicate to the buyer that the payment terms will not be defined in the invoice message but in subsequent commercial account summary message. |
| 1131 | Code list identification code | C an..17 | **O** | | |
| 3055 | Code list responsible agency code | C an..3 | **D** | | |
| 4435 | Payment channel code | C an..3 | **O** | | 1 = Ordinary post |
| Segment Notes:<br>This segment allows the party issuing the Invoice to specify how they would like payment to be made.<br><br>Example:<br>PAI+::42' | | | | | |

## 5. Segments Layout

Segment number: 7

| **ALI** | - C | 5 - Additional information | | | |
|---|---|---|---|---|---|
| Function:<br>To indicate that special conditions due to the origin, customs preference, fiscal or commercial factors are applicable. | | | | | |
| | | EDIFACT | GS1 | * | Description |
| 3239 | Country of origin name code | C an..3 | **O** | | Use ISO 3166 two alpha country code. |
| 9213 | Duty regime type code | C an..3 | **O** | | |
| 4183 | Special condition code | C an..3 | **O** | | 6 = Subject to bonus<br>15 = Not subject to discount<br>116 = Subject to postponed discount<br>140 = Return of goods<br>141 = Subject to annual bonus<br>76E = Special conditions applicable to only this invoice (GS1 Temporary Code)<br>79E = Discrepancies or adjustments (GS1 Temporary Code) |
| 4183 | Special condition code | C an..3 | **O** | | |
| 4183 | Special condition code | C an..3 | **O** | | |
| 4183 | Special condition code | C an..3 | **O** | | |
| 4183 | Special condition code | C an..3 | **O** | | |
| Segment Notes:<br>This segment is used to specify any special conditions which apply to the goods being invoiced. The country of origin of all the products (if it is the same) may be specified here in the header section.<br><br>Example:<br>ALI+EU' | | | | | |

## 5. Segments Layout

Segment number: 8

| **FTX** | - C | 99 - Free text | | | |
|---|---|---|---|---|---|
| Function:<br>To provide free form or coded text information. | | | | | |
| | | EDIFACT | GS1 | * | Description |
| 4451 | Text subject code qualifier | M an..3 | **M** | | BAQ = VAT exemption reason<br>PUR = Purchasing information<br>ZZZ = Mutually defined |
| 4453 | Free text function code | C an..3 | **O** | * | 1 = Text for subsequent use |
| C107 | TEXT REFERENCE | C | **D** | | This composite is only used when trading partners have agreed to use mutually defined code values. |
| 4441 | Free text value code | M an..17 | **M** | | 001 = Reference to standard text between trading partners. |
| 1131 | Code list identification code | C an..17 | **O** | | |
| 3055 | Code list responsible agency code | C an..3 | **D** | | 91 = Assigned by supplier or supplier's agent<br>92 = Assigned by buyer or buyer's agent |
| C108 | TEXT LITERAL | C | **D** | | This composite is only used if coded text can not be used. |
| 4440 | Free text value | M an..512 | **M** | | |
| 4440 | Free text value | C an..512 | **O** | | |
| 4440 | Free text value | C an..512 | **O** | | |
| 4440 | Free text value | C an..512 | **O** | | |
| 4440 | Free text value | C an..512 | **O** | | |
| 3453 | Language name code | C an..3 | **D** | | ISO 639 two alpha code<br>This data element is only used when non coded free text has been provided in data element C108. |
| 4447 | Free text format code | C an..3 | **N** | | |

Segment Notes:

This segment is used to provide free form or coded text information which applies to the complete invoice message.
Use of this segment in free form is not recommended since in most cases it inhibits automatic processing of the Invoice. Coded references to standard texts is an available functionality which enables automatic processing and reduces transmission and processing overheads. Standard texts should be mutually defined among trading partners and can be used to cover legal and other requirements.

Example:
FTX+PUR+1+001::91'
(E.g. Purchasing information standard text code 001 = Please note adjusted payment terms)

## 5. Segments Layout

Segment number: 9

| | | | | |
|---|---|---|---|---|
| **SG1** | - C | 99999 | - | RFF-DTM |
| **RFF** | - M | 1 | - | Reference |

Function:

To specify a reference.

| | | EDIFACT | GS1 | * | Description |
|---|---|---|---|---|---|
| C506 | REFERENCE | M | **M** | | |
| 1153 | Reference code qualifier | M an..3 | **M** | | AAB = Proforma invoice number<br>AAJ = Delivery order number<br>AAK = Despatch advice number<br>AFO = Beneficiary's reference<br>ALL = Message batch number<br>AIZ = Consolidated invoice number<br>AMT = Goods and Services Tax identification number<br>APQ = Commercial account summary reference number<br>CD = Credit note number<br>CR = Customer reference number<br>DL = Debit note number<br>DQ = Delivery note number<br>IV = Invoice number<br>ON = Order number (buyer)<br>PL = Price list number<br>RF = Export reference number<br>VN = Order number (supplier) |
| 1154 | Reference identifier | C an..70 | **R** | | |
| 1156 | Document line identifier | C an..6 | **N** | | |
| 4000 | Reference version identifier | C an..35 | **N** | | |
| 1060 | Revision identifier | C an..6 | **N** | | |

Segment Notes:

This segment is used to specify references which relate to the whole invoice, for example, Purchase Order Numbers, Delivery Numbers, etc.
The message batch number (ALL) is included in this segment. This number is used to provide a link between a batch of invoice messages and a TAXCON message.
If the document type is a credit note the invoice to which it relates may need to be specified. This is done using the 'IV' qualifier for DE 1153.

Example:
RFF+ALL:252'
RFF+ON:ORD9523'

## 5. Segments Layout

Segment number: 10

| | | | | |
|---|---|---|---|---|
| **SG1** | - C | 99999 | - | RFF-DTM |
| **DTM** | - C | 5 | - | Date/time/period |

Function:

To specify date, and/or time, or period.

| | | EDIFACT | GS1 | * | Description |
|---|---|---|---|---|---|
| C507 | DATE/TIME/PERIOD | M | **M** | | |
| 2005 | Date or time or period function code qualifier | M an..3 | **M** | * | 171 = Reference date/time |
| 2380 | Date or time or period value | C an..35 | **R** | | |
| 2379 | Date or time or period format code | C an..3 | **R** | | 102 = CCYYMMDD<br>203 = CCYYMMDDHHMM |

Segment Notes:

This segment is used to specify any dates related to the references given in the previous RFF segment.

Example:
DTM+171:20020804:102'

## 5. Segments Layout

Segment number: 11

| | | | |
|---|---|---|---|
| **SG2** | - C | 99 - | NAD-FII-SG3-SG5 |
| **NAD** | - M | 1 - | Name and address |

Function:

To specify the name/address and their related function, either by C082 only and/or unstructured by C058 or structured by C080 thru 3207.

| | | EDIFACT | GS1 | * | Description |
|---|---|---|---|---|---|
| 3035 | Party function code qualifier | M an..3 | **M** | | BO = Broker or sales office<br>BS = Bill and ship to<br>BY = Buyer<br>CN = Consignee<br>CS = Consolidator<br>DP = Delivery party<br>II = Issuer of invoice<br>IV = Invoicee<br>LC = Party declaring the Value Added Tax (VAT)<br>LD = Party recovering the Value Added Tax (VAT)<br>PE = Payee<br>RE = Party to receive commercial invoice remittance<br>SE = Seller<br>SN = Store number<br>SR = Supplier's agent/representative<br>ST = Ship to<br>SU = Supplier<br>Code value 'CS, Consolidator' is used to identify only parties who provide administrative or invoice consolidating services.<br>Code value 'LD, Party recovering the Value Added Tax ' is used only if the ordering party and the buyer are not identical. |
| C082 | PARTY IDENTIFICATION DETAILS | C | **A** | | |
| 3039 | Party identifier | M an..35 | **M** | | For identification of parties it is recommended to use GLN - Format n13. |
| 1131 | Code list identification code | C an..17 | **N** | | |
| 3055 | Code list responsible agency code | C an..3 | **R** | * | 9 = GS1 |
| C058 | NAME AND ADDRESS | C | **O** | | This composite may only be used to fulfill the requirements of directive 2003/58/EC, article 4. |
| 3124 | Name and address description | M an..35 | **M** | | |
| 3124 | Name and address description | C an..35 | **O** | | |
| 3124 | Name and address description | C an..35 | **O** | | |
| 3124 | Name and address description | C an..35 | **O** | | |
| 3124 | Name and address description | C an..35 | **O** | | |
| C080 | PARTY NAME | C | **D** | | |
| 3036 | Party name | M an..35 | **M** | | Party Name in clear text. |
| 3036 | Party name | C an..35 | **O** | | |
| 3036 | Party name | C an..35 | **O** | | |

## 5. Segments Layout

Segment number: 11

| | | EDIFACT | GS1 | * | Description |
|---|---|---|---|---|---|
| 3036 | Party name | C an..35 | **O** | | |
| 3036 | Party name | C an..35 | **O** | | |
| 3045 | Party name format code | C an..3 | **O** | | |
| C059 | STREET | C | **D** | | |
| 3042 | Street and number or post office box identifier | M an..35 | **M** | | Building Name/Number and Street Name |
| 3042 | Street and number or post office box identifier | C an..35 | **O** | | |
| 3042 | Street and number or post office box identifier | C an..35 | **O** | | |
| 3042 | Street and number or post office box identifier | C an..35 | **O** | | |
| 3164 | City name | C an..35 | **D** | | City/Town name, clear text |
| C819 | COUNTRY SUB-ENTITY DETAILS | C | **D** | | |
| 3229 | Country sub-entity name code | C an..9 | **O** | | |
| 1131 | Code list identification code | C an..17 | **O** | | |
| 3055 | Code list responsible agency code | C an..3 | **O** | | |
| 3228 | Country sub-entity name | C an..70 | **O** | | County/State, clear text. |
| 3251 | Postal identification code | C an..17 | **D** | | Postal Code |
| 3207 | Country name code | C an..3 | **D** | | ISO 3166 two alpha code |

Segment Notes:

This segment is used to identify the trading parties involved in the invoice process. Identification of the buyer and supplier of goods and services is mandatory in the Invoice. Additionally, the issuer of the invoice and the invoicee must be identified if different from the buying and supplying parties. The consignee or delivery party needs to be specified if different to the buyer's address.

Example:
NAD+BY+5412345000020::9'
NAD+SU+4012345500004::9'
NAD+DP+5412345000013::9'

Dependency Notes:
The following composites and data elements are only used when a coded name and address can not be used.
The affected composites and data elements are as follows:
C080 - C059 - 3164 - C819 - 3251 - 3207

## 5. Segments Layout

Segment number: 12

| | | | |
|---|---|---|---|
| **SG2** | - C | 99 - | NAD-FII-SG3-SG5 |
| **FII** | - C | 5 - | Financial institution information |

Function:
To identify an account and a related financial institution.

| | | EDIFACT | GS1 | * | Description |
|---|---|---|---|---|---|
| 3035 | Party function code qualifier | M an..3 | **M** | | PB = Paying financial institution<br>RB = Receiving financial institution |
| C078 | ACCOUNT HOLDER IDENTIFICATION | C | **R** | | |
| 3194 | Account holder identifier | C an..35 | **R** | | |
| 3192 | Account holder name | C an..35 | **O** | | |
| 3192 | Account holder name | C an..35 | **O** | | |
| 6345 | Currency identification code | C an..3 | **O** | | ISO 4217 three alpha code |
| C088 | INSTITUTION IDENTIFICATION | C | **O** | | |
| 3433 | Institution name code | C an..11 | **A** | | |
| 1131 | Code list identification code | C an..17 | **O** | | 25 = Bank identification |
| 3055 | Code list responsible agency code | C an..3 | **D** | | 5 = ISO (International Organization for Standardization) |
| 3434 | Institution branch identifier | C an..17 | **O** | | |
| 1131 | Code list identification code | C an..17 | **O** | | 25 = Bank identification |
| 3055 | Code list responsible agency code | C an..3 | **D** | | 5 = ISO (International Organization for Standardization) |
| 3432 | Institution name | C an..70 | **O** | | |
| 3436 | Institution branch location name | C an..70 | **O** | | |
| 3207 | Country name code | C an..3 | **O** | | ISO 3166 two alpha code |

Segment Notes:

This segment is used to identify financial institution information related to the party identified in the NAD segment.

Example:
FII+RB+994-3277711:NGEISS+KREDBEBB:25:5'

## 5. Segments Layout

Segment number: 13

| | | | |
|---|---|---|---|
| **SG2** | - C | 99 | - NAD-FII-SG3-SG5 |
| **SG3** | - C | 9999 | - RFF |
| **RFF** | - M | 1 | - Reference |

Function:

To specify a reference.

| | | EDIFACT | GS1 | * | Description |
|---|---|---|---|---|---|
| C506 | REFERENCE | M | **M** | | |
| 1153 | Reference code qualifier | M an..3 | **M** | * | ADE = Account number<br>ALV = Registered capital reference<br>AMT = Goods and Services Tax identification number<br>AP = Accounts receivable number<br>AQQ = Activite Principale Exercee (APE) identifier<br>ATB = Purchase for export Customs agreement number<br>EX = Export licence number<br>FC = Fiscal number<br>CR = Customer reference number<br>GN = Government reference number<br>IA = Internal vendor number<br>IP = Import licence number<br>IT = Internal customer number<br>PY = Payee's financial institution account number<br>SZ = Specification number<br>TRB = Tribunal place registration number (GS1 Temporary Code)<br>VA = VAT registration number<br>XA = Company/place registration number<br>YC1 = Additional party identification (GS1 Temporary Code) |
| 1154 | Reference identifier | C an..70 | **R** | | |
| 1156 | Document line identifier | C an..6 | **N** | | |
| 4000 | Reference version identifier | C an..35 | **N** | | |
| 1060 | Revision identifier | C an..6 | **N** | | |

Segment Notes:

This segment is used to specify reference numbers related to the party identified in the previous NAD segment.

Example:
RFF+VA:VR12345'

## 5. Segments Layout

Segment number: 14

| | | | |
|---|---|---|---|
| **SG2** | - C | 99 - | NAD-FII-SG3-SG5 |
| **SG5** | - C | 5 - | CTA-COM |
| **CTA** | - M | 1 - | Contact information |

Function:

To identify a person or a department to whom communication should be directed.

| | | EDIFACT | GS1 | * | Description |
|---|---|---|---|---|---|
| 3139 | Contact function code | C an..3 | **R** | | AD = Accounting contact<br>AP = Accounts payable contact<br>AR = Accounts receivable contact<br>GR = Goods receiving contact<br>PD = Purchasing contact |
| C056 | DEPARTMENT OR EMPLOYEE DETAILS | C | **O** | | |
| 3413 | Department or employee name code | C an..17 | **O** | | |
| 3412 | Department or employee name | C an..35 | **O** | | |

Segment Notes:

This segment is used to identify the department and/or person within the party specified in the NAD.
The Global Location Number GLN - Format n13 - is particularly suitable for this purpose.

Example:
CTA+AD+:MARK CARTER'

## 5. Segments Layout

Segment number: 15

| | | | |
|---|---|---|---|
| **SG2** | - C | 99 - | NAD-FII-SG3-SG5 |
| **SG5** | - C | 5 - | CTA-COM |
| **COM** | - C | 5 - | Communication contact |

Function:

To identify a communication number of a department or a person to whom communication should be directed.

| | | EDIFACT | GS1 | * | Description |
|---|---|---|---|---|---|
| C076 | COMMUNICATION CONTACT | M | **M** | | |
| 3148 | Communication address identifier | M an..512 | **M** | | |
| 3155 | Communication address code qualifier | M an..3 | **M** | | EM = Electronic mail<br>TE = Telephone<br>AO = Uniform Resource Location (URL) |

Segment Notes:

This segment is used to identify the communications number and the type of communications used for the department person identified in the CTA segment.

Example:
COM+00448132445322:TE'

## 5. Segments Layout

Segment number: 16

| | | | |
|---|---|---|---|
| **SG6** | - C | 5 - | TAX-MOA |
| **TAX** | - M | 1 - | Duty/tax/fee details |

Function:

To specify relevant duty/tax/fee information.

| | | EDIFACT | GS1 | * | Description |
|---|---|---|---|---|---|
| 5283 | Duty or tax or fee function code qualifier | M an..3 | **M** | | 5 = Customs duty<br>7 = Tax |
| C241 | DUTY/TAX/FEE TYPE | C | **D** | | |
| 5153 | Duty or tax or fee type name code | C an..3 | **O** | | GST = Goods and services tax<br>VAT = Value added tax |
| 1131 | Code list identification code | C an..17 | **O** | | |
| 3055 | Code list responsible agency code | C an..3 | **D** | | |
| 5152 | Duty or tax or fee type name | C an..35 | **O** | | |
| C533 | DUTY/TAX/FEE ACCOUNT DETAIL | C | **O** | | |
| 5289 | Duty or tax or fee account code | M an..6 | **M** | | |
| 1131 | Code list identification code | C an..17 | **O** | | |
| 3055 | Code list responsible agency code | C an..3 | **D** | | |
| 5286 | Duty or tax or fee assessment basis value | C an..15 | **O** | | |
| C243 | DUTY/TAX/FEE DETAIL | C | **A** | | |
| 5279 | Duty or tax or fee rate code | C an..7 | **O** | | |
| 1131 | Code list identification code | C an..17 | **O** | | |
| 3055 | Code list responsible agency code | C an..3 | **D** | | |
| 5278 | Duty or tax or fee rate | C an..17 | **R** | | The actual rate of tax/duty. |
| 5273 | Duty or tax or fee rate basis code | C an..12 | **O** | | |
| 1131 | Code list identification code | C an..17 | **O** | | |
| 3055 | Code list responsible agency code | C an..3 | **D** | | |
| 5305 | Duty or tax or fee category code | C an..3 | **D** | | A = Mixed tax rate<br>E = Exempt from tax<br>S = Standard rate |
| 3446 | Party tax identifier | C an..20 | **O** | | |
| 1227 | Calculation sequence code | C an..3 | **N** | | |

Segment Notes:

This segment is used to indicate the type, category, and rate of tax for the complete invoice.

Example:
TAX+7+VAT+++:::21+S'

Dependency Notes:
DE C241 and 5305: Tax types and categories will vary from country to country. They should be defined by

## 5. Segments Layout

Segment number: 16

| |
|---|
| national guidelines. |

## 5. Segments Layout

Segment number: 17

| | | |
|---|---|---|
| **SG6** | - C | 5 - TAX-MOA |
| **MOA** | - C | 1 - Monetary amount |

Function:

To specify a monetary amount.

| | | EDIFACT | GS1 | * | Description |
|---|---|---|---|---|---|
| C516 | MONETARY AMOUNT | M | **M** | | |
| 5025 | Monetary amount type code qualifier | M an..3 | **M** | | 124 = Tax amount<br>125 = Taxable amount |
| 5004 | Monetary amount | C n..35 | **R** | | |
| 6345 | Currency identification code | C an..3 | **N** | | |
| 6343 | Currency type code qualifier | C an..3 | **N** | | |
| 4405 | Status description code | C an..3 | **N** | | |

Segment Notes:

This segment is to be used to provide tax related monetary amounts relevant to the complete invoice. These amount should be added to any amounts specified in the detail section in order to calculate the total invoice tax amounts contained in the summary section.

Example:
MOA+124:154.54'

## 5. Segments Layout

Segment number: 18

| | | | |
|---|---|---|---|
| **SG7** | - C | 99 - | CUX-DTM |
| **CUX** | - M | 1 - | Currencies |

Function:

To specify currencies used in the transaction and relevant details for the rate of exchange.

| | | EDIFACT | GS1 | * | Description |
|---|---|---|---|---|---|
| C504 | CURRENCY DETAILS | C | **R** | | |
| 6347 | Currency usage code qualifier | M an..3 | **M** | * | 2 = Reference currency |
| 6345 | Currency identification code | C an..3 | **R** | | ISO 4217 three alpha |
| 6343 | Currency type code qualifier | C an..3 | **R** | * | 4 = Invoicing currency<br>10 = Pricing currency<br>11 = Payment currency |
| 6348 | Currency rate value | C n..4 | **N** | | |
| C504 | CURRENCY DETAILS | C | **D** | | The second occurrence of this composite is only used if a target currency is being specified. |
| 6347 | Currency usage code qualifier | M an..3 | **M** | * | 3 = Target currency |
| 6345 | Currency identification code | C an..3 | **R** | | ISO 4217 three alpha |
| 6343 | Currency type code qualifier | C an..3 | **R** | * | 4 = Invoicing currency<br>10 = Pricing currency<br>11 = Payment currency |
| 6348 | Currency rate value | C n..4 | **O** | | |
| 5402 | Currency exchange rate | C n..12 | **D** | | The rate of exchange which applies to the currencies. The rate of exchange is only used if a target currency has been identified in the second occurrence of C504. |
| 6341 | Exchange rate currency market identifier | C an..3 | **N** | | |

Segment Notes:

This segment is used to specify currency information for the complete invoice.
The CUX Segment is mandatory for international exchanges.
When specifying Reference and Target Currencies for international trade, one occurrence of CUX is all that is required. The reference currency is identified in the first occurrence of composite C504, with the target currency specified in the second occurrence of C504. The rate of exchange between the two is detailed in DE 5402.
The general rule for calculating the rate of exchange is as follows :
Reference Currency multiplied by Rate = Target Currency.

Example:
Where only the invoicing currency needs to be identified for national trade.
CUX+2:EUR:4'

CUX+2:EUR:4+3:USD:11+0.90243'

## 5. Segments Layout

Segment number: 19

| | | | |
|---|---|---|---|
| **SG7** | - C | 99 - | CUX-DTM |
| **DTM** | - C | 5 - | Date/time/period |

Function:

To specify date, and/or time, or period.

| | | EDIFACT | GS1 | * | Description |
|---|---|---|---|---|---|
| C507 | DATE/TIME/PERIOD | M | **M** | | |
| 2005 | Date or time or period function code qualifier | M an..3 | **M** | * | 134 = Rate of exchange date/time |
| 2380 | Date or time or period value | C an..35 | **R** | | |
| 2379 | Date or time or period format code | C an..3 | **R** | | 102 = CCYYMMDD<br>718 = CCYYMMDD-CCYYMMDD |

Segment Notes:

This segment is used to specify the date on which a rate of exchange was quoted.

Example:
DTM+134:20021010:102'

## 5. Segments Layout

Segment number: 20

| | | | |
|---|---|---|---|
| **SG8** | - C | 10 - | PAT-DTM-PCD-MOA-PAI-FII |
| **PAT** | - M | 1 - | Payment terms basis |

Function:

To specify the payment terms basis.

Notes:
1. This segment will be removed effective with directory D.02B.

| | | EDIFACT | GS1 | * | Description |
|---|---|---|---|---|---|
| 4279 | Payment terms type code qualifier | M an..3 | **M** | | 1 = Basic<br>3 = Fixed date<br>7 = Extended<br>20 = Penalty terms<br>22 = Discount<br>37 = Complete payment |
| C110 | PAYMENT TERMS | C | **O** | | |
| 4277 | Payment terms description identifier | M an..17 | **M** | | ZZZ = Mutually defined (GS1 Temporary Code) |
| 1131 | Code list identification code | C an..17 | **O** | | |
| 3055 | Code list responsible agency code | C an..3 | **D** | | |
| 4276 | Payment terms description | C an..35 | **O** | | |
| 4276 | Payment terms description | C an..35 | **O** | | |
| C112 | TERMS/TIME INFORMATION | C | **O** | | |
| 2475 | Time reference code | M an..3 | **M** | | 5 = Date of invoice |
| 2009 | Terms time relation code | C an..3 | **O** | | 3 = After reference |
| 2151 | Period type code | C an..3 | **O** | | D = Day<br>M = Month<br>WD = Working days<br>Y = Year |
| 2152 | Period count quantity | C n..3 | **O** | | Number of periods for payment. |

Segment Notes:

This segment is used by the issuer of the invoice to specify the payment terms for the complete invoice.

Example:
The following example indicates basic payment terms with payment due 30 days after the reference date which is the invoice date.
PAT+1++5:3:D:30'

## 5. Segments Layout

Segment number: 21

| | | | |
|---|---|---|---|
| **SG8** | - C | 10 - | PAT-DTM-PCD-MOA-PAI-FII |
| **DTM** | - C | 5 - | Date/time/period |

Function:

To specify date, and/or time, or period.

| | | EDIFACT | GS1 | * | Description |
|---|---|---|---|---|---|
| C507 | DATE/TIME/PERIOD | M | **M** | | |
| 2005 | Date or time or period function code qualifier | M an..3 | **M** | * | 7 = Effective date/time<br>12 = Terms discount due date/time<br>13 = Terms net due date<br>209 = Value date<br>326 = Charge period |
| 2380 | Date or time or period value | C an..35 | **R** | | |
| 2379 | Date or time or period format code | C an..3 | **R** | | 102 = CCYYMMDD<br>718 = CCYYMMDD-CCYYMMDD |

Segment Notes:

This segment is used to specify any dates associated with the payment terms for the invoice.

Example:
Net due date for payment the 31st August 2002.
DTM+13:20020831:102'

## 5. Segments Layout

Segment number: 22

| | | | |
|---|---|---|---|
| **SG8** | - C | 10 - | PAT-DTM-PCD-MOA-PAI-FII |
| **PCD** | - C | 1 - | Percentage details |

Function:

To specify percentage information.

| | | EDIFACT | GS1 | * | Description |
|---|---|---|---|---|---|
| C501 | PERCENTAGE DETAILS | M | **M** | | |
| 5245 | Percentage type code qualifier | M an..3 | **M** | | 7 = Percentage of invoice<br>12 = Discount<br>15 = Penalty percentage<br>16 = Interest percentage |
| 5482 | Percentage | C n..10 | **R** | | |
| 5249 | Percentage basis identification code | C an..3 | **O** | | 13 = Invoice value |
| 1131 | Code list identification code | C an..17 | **O** | | |
| 3055 | Code list responsible agency code | C an..3 | **D** | | |
| 4405 | Status description code | C an..3 | **N** | | |

Segment Notes:

This segment is used to specify percentages which will be allowed or charged if the invoicee pays (does not pay) to terms.

Example:
PCD+15:2.5:13'

## 5. Segments Layout

Segment number: 23

| | | | |
|---|---|---|---|
| **SG8** | - C | 10 - | PAT-DTM-PCD-MOA-PAI-FII |
| **MOA** | - C | 1 - | Monetary amount |

Function:

To specify a monetary amount.

| | | EDIFACT | GS1 | * | Description |
|---|---|---|---|---|---|
| C516 | MONETARY AMOUNT | M | **M** | | |
| 5025 | Monetary amount type code qualifier | M an..3 | **M** | | 21 = Cash discount<br>23 = Charge amount<br>529 = Calculation basis which includes all taxes except VAT |
| 5004 | Monetary amount | C n..35 | **R** | | Actual value being charged/discounted. |
| 6345 | Currency identification code | C an..3 | **N** | | |
| 6343 | Currency type code qualifier | C an..3 | **N** | | |
| 4405 | Status description code | C an..3 | **N** | | |

Segment Notes:

This segment is used to specify monetary values which will be allowed or charged if the invoicee pays (does not pay) to terms.

Example:
MOA+21:100'

## 5. Segments Layout

Segment number: 24

| | | | |
|---|---|---|---|
| **SG8** | - C | 10 - | PAT-DTM-PCD-MOA-PAI-FII |
| **PAI** | - C | 1 - | Payment instructions |

Function:

To specify the instructions for payment.

| | | EDIFACT | GS1 | * | Description |
|---|---|---|---|---|---|
| C534 | PAYMENT INSTRUCTION DETAILS | M | **M** | | |
| 4439 | Payment conditions code | C an..3 | **O** | | 10 = Irrevocable documentary credit |
| 4431 | Payment guarantee means code | C an..3 | **O** | | |
| 4461 | Payment means code | C an..3 | **O** | | 42 = Payment to bank account |
| 1131 | Code list identification code | C an..17 | **O** | | |
| 3055 | Code list responsible agency code | C an..3 | **D** | | |
| 4435 | Payment channel code | C an..3 | **O** | | |

Segment Notes:

This segment is used to specify payment instructions related to payment terms.

Example:
The following example indicates that payment has to be made to a bank account.
PAI+::42'

## 5. Segments Layout

Segment number: 25

| | | | |
|---|---|---|---|
| **SG8** | - C | 10 - | PAT-DTM-PCD-MOA-PAI-FII |
| **FII** | - C | 1 - | Financial institution information |

Function:

To identify an account and a related financial institution.

| | | EDIFACT | GS1 | * | Description |
|---|---|---|---|---|---|
| 3035 | Party function code qualifier | M an..3 | **M** | * | RB = Receiving financial institution |
| C078 | ACCOUNT HOLDER IDENTIFICATION | C | **R** | | |
| 3194 | Account holder identifier | C an..35 | **R** | | |
| 3192 | Account holder name | C an..35 | **O** | | |
| 3192 | Account holder name | C an..35 | **O** | | |
| 6345 | Currency identification code | C an..3 | **O** | | ISO 4217 three alpha code |
| C088 | INSTITUTION IDENTIFICATION | C | **O** | | |
| 3433 | Institution name code | C an..11 | **R** | | |
| 1131 | Code list identification code | C an..17 | **O** | | 25 = Bank identification |
| 3055 | Code list responsible agency code | C an..3 | **D** | | 5 = ISO (International Organization for Standardization) |
| 3434 | Institution branch identifier | C an..17 | **O** | | |
| 1131 | Code list identification code | C an..17 | **O** | | 25 = Bank identification |
| 3055 | Code list responsible agency code | C an..3 | **D** | | 5 = ISO (International Organization for Standardization) |
| 3432 | Institution name | C an..70 | **O** | | |
| 3436 | Institution branch location name | C an..70 | **O** | | |
| 3207 | Country name code | C an..3 | **O** | | ISO 3166 two alpha code |

Segment Notes:

This segment is used to identify the receiving financial institution and account holder number, related to the payment means.

Example:
FII+RB+994-3277711+KREDBEBB:25:5'

## 5. Segments Layout

Segment number: 26

| | | | |
|---|---|---|---|
| **SG9** | - C | 10 - | TDT-SG10-SG11 |
| **TDT** | - M | 1 - | Details of transport |

Function:

To specify the transport details such as mode of transport, means of transport, its conveyance reference number and the identification of the means of transport.
The segment may be pointed to by the TPL segment.

| | | EDIFACT | GS1 | * | Description |
|---|---|---|---|---|---|
| 8051 | Transport stage code qualifier | M an..3 | **M** | | 20 = Main-carriage transport |
| 8028 | Means of transport journey identifier | C an..17 | **O** | | Reference number covering the transport. |
| C220 | MODE OF TRANSPORT | C | **A** | | |
| 8067 | Transport mode name code | C an..3 | **R** | | |
| 8066 | Transport mode name | C an..17 | **N** | | |
| C228 | TRANSPORT MEANS | C | **O** | | |
| 8179 | Transport means description code | C an..8 | **D** | | 23 = Rail bulk car<br>31 = Truck |
| 8178 | Transport means description | C an..17 | **D** | | |
| C040 | CARRIER | C | **O** | | |
| 3127 | Carrier identifier | C an..17 | **A** | | For identification of carriers it is recommended to use Global Location Number GLN - Format n13. |
| 1131 | Code list identification code | C an..17 | **O** | | |
| 3055 | Code list responsible agency code | C an..3 | **D** | * | 9 = GS1<br>60 = Assigned by national trade agency<br>DE 3055 must be used if DE 3127 is used. |
| 3128 | Carrier name | C an..35 | **O** | | |
| 8101 | Transit direction indicator code | C an..3 | **O** | | BS = Buyer to supplier<br>SB = Supplier to buyer |
| C401 | EXCESS TRANSPORTATION INFORMATION | C | **N** | | |
| 8457 | Excess transportation reason code | M an..3 | | | |
| 8459 | Excess transportation responsibility code | M an..3 | | | |
| 7130 | Customer shipment authorisation identifier | C an..17 | | | |
| C222 | TRANSPORT IDENTIFICATION | C | **O** | | |
| 8213 | Transport means identification name identifier | C an..9 | **O** | | |
| 1131 | Code list identification code | C an..17 | **O** | | |
| 3055 | Code list responsible agency code | C an..3 | **D** | | DE 3055 must be used if DE 8213 is used. |
| 8212 | Transport means identification name | C an..35 | **R** | | Vehicle licence plate/Aircraft number |
| 8453 | Transport means nationality code | C an..3 | **O** | | ISO 3166 two alpha code |
| | Transport means ownership | | **N** | | |

## 5. Segments Layout

Segment number: 26

| | EDIFACT | GS1 | * | Description |
|---|---|---|---|---|
| 8281 indicator code | C an..3 | | | |

Segment Notes:

This segment is used to specify transport services provided for the delivery of the invoiced line items, such as express transport services.

Example:
TDT+20++30+31'

Dependency Notes:
DE C228: DE 8179 and 8178 are only used when the type of transport must be specifically identified, i.e. where a generic description such as road transport is unsuitable.

## 5. Segments Layout

Segment number: 27

| | | | |
|---|---|---|---|
| **SG9** | - C | 10 - | TDT-SG10-SG11 |
| **SG10** | - C | 10 - | LOC-DTM |
| **LOC** | - M | 1 - | Place/location identification |

Function:

To identify a place or a location and/or related locations.

| | | EDIFACT | GS1 | * | Description |
|---|---|---|---|---|---|
| 3227 | Location function code qualifier | M an..3 | **M** | | 8 = Place of destination<br>9 = Place/port of loading |
| C517 | LOCATION IDENTIFICATION | C | **A** | | |
| 3225 | Location name code | C an..25 | **A** | | GLN - Format n13 |
| 1131 | Code list identification code | C an..17 | **O** | | |
| 3055 | Code list responsible agency code | C an..3 | **D** | | 9 = GS1<br>DE 3055 must be used if DE 3225 is used and does not contain an UN/LOCODE. |
| 3224 | Location name | C an..256 | **O** | | |
| C519 | RELATED LOCATION ONE IDENTIFICATION | C | **O** | | |
| 3223 | First related location name code | C an..25 | **O** | | Global Location Number GLN - Format n13 |
| 1131 | Code list identification code | C an..17 | **O** | | |
| 3055 | Code list responsible agency code | C an..3 | **D** | | DE 3055 must be used if DE 3223 is used and does not contain an UN/LOCODE.<br>9 = GS1 |
| 3222 | First related location name | C an..70 | **O** | | |
| C553 | RELATED LOCATION TWO IDENTIFICATION | C | **O** | | |
| 3233 | Second related location name code | C an..25 | **O** | | Global Location Number GLN - Format n13 |
| 1131 | Code list identification code | C an..17 | **O** | | |
| 3055 | Code list responsible agency code | C an..3 | **D** | | DE 3055 must be used if DE 3233 is used and does not contain an UN/LOCODE.<br>9 = GS1 |
| 3232 | Second related location name | C an..70 | **O** | | |
| 5479 | Relation code | C an..3 | **N** | | |

Segment Notes:

This segment is used to identify locations related to the details of transport.

Example:
LOC+5+5412345678908::9'

## 5. Segments Layout

Segment number: 28

| | | | |
|---|---|---|---|
| **SG9** | - C | 10 - | TDT-SG10-SG11 |
| **SG10** | - C | 10 - | LOC-DTM |
| **DTM** | - C | 5 - | Date/time/period |

Function:

To specify date, and/or time, or period.

| | | EDIFACT | GS1 | * | Description |
|---|---|---|---|---|---|
| C507 | DATE/TIME/PERIOD | M | **M** | | |
| 2005 | Date or time or period function code qualifier | M an..3 | **M** | | 35 = Delivery date/time, actual<br>132 = Arrival date/time, estimated<br>133 = Departure date/time, estimated<br>186 = Departure date/time, actual |
| 2380 | Date or time or period value | C an..35 | **R** | | |
| 2379 | Date or time or period format code | C an..3 | **R** | | |

Segment Notes:

This segment is used to specify dates related to the above location.

Example:
DTM+132:20010606:102'

## 5. Segments Layout

Segment number: 29

| | | | | |
|---|---|---|---|---|
| **SG9** | - C | 10 | - | TDT-SG10-SG11 |
| **SG11** | - C | 9999 | - | RFF |
| **RFF** | - M | 1 | - | Reference |

Function:

To specify a reference.

| | | EDIFACT | GS1 | * | Description |
|---|---|---|---|---|---|
| C506 | REFERENCE | M | **M** | | |
| 1153 | Reference code qualifier | M an..3 | **M** | | AAB = Proforma invoice number<br>AAJ = Delivery order number<br>AAK = Despatch advice number<br>AFO = Beneficiary's reference<br>ALL = Message batch number<br>AIZ = Consolidated invoice number<br>AMT = Goods and Services Tax identification number<br>APQ = Commercial account summary reference number<br>CD = Credit note number<br>CR = Customer reference number<br>DL = Debit note number<br>DQ = Delivery note number<br>IV = Invoice number<br>ON = Order number (buyer)<br>PL = Price list number<br>RF = Export reference number<br>VN = Order number (supplier) |
| 1154 | Reference identifier | C an..70 | **R** | | |
| 1156 | Document line identifier | C an..6 | **N** | | |
| 4000 | Reference version identifier | C an..35 | **N** | | |
| 1060 | Revision identifier | C an..6 | **N** | | |

Segment Notes:

## 5. Segments Layout

Segment number: 30

| | | | |
|---|---|---|---|
| **SG12** | - C | 5 - | TOD-LOC |
| **TOD** | - M | 1 - | Terms of delivery or transport |

Function:

To specify terms of delivery or transport.

| | | EDIFACT | GS1 | * | Description |
|---|---|---|---|---|---|
| 4055 | Delivery or transport terms function code | C an..3 | **R** | | 3 = Price and despatch condition<br>6 = Delivery condition |
| 4215 | Transport charges payment method code | C an..3 | **O** | | DF = Defined by buyer and supplier<br>PC = Prepaid but charged to customer |
| C100 | TERMS OF DELIVERY OR TRANSPORT | C | **A** | | |
| 4053 | Delivery or transport terms description code | C an..3 | **R** | | INCOTERMS (See EANCOM Codes Set)<br>If INCOTERMS are applicable, then DE 3055 has to contain code value "9" and DE 1131 must be used. |
| 1131 | Code list identification code | C an..17 | **D** | | |
| 3055 | Code list responsible agency code | C an..3 | **D** | | |
| 4052 | Delivery or transport terms description | C an..70 | **O** | | |
| 4052 | Delivery or transport terms description | C an..70 | **O** | | |

Segment Notes:

This segment is used to specify the terms of delivery for the complete invoice.

Example:
TOD+3++CIF:2E:9'

Dependency Notes:
Data elements 1131 and 3055 are only used if specific terms of delivery codes, which are outside those recommended by EDIFACT, are being used.

## 5. Segments Layout

Segment number: 31

| | | | |
|---|---|---|---|
| **SG12** | - C | 5 - | TOD-LOC |
| **LOC** | - C | 2 - | Place/location identification |

Function:

To identify a place or a location and/or related locations.

| | | EDIFACT | GS1 | * | Description |
|---|---|---|---|---|---|
| 3227 | Location function code qualifier | M an..3 | **M** | | 1 = Place of terms of delivery<br>5 = Place of departure<br>7 = Place of delivery |
| C517 | LOCATION IDENTIFICATION | C | **A** | | |
| 3225 | Location name code | C an..25 | **A** | | UN/LOCODE |
| 1131 | Code list identification code | C an..17 | **O** | | |
| 3055 | Code list responsible agency code | C an..3 | **D** | | 3 = IATA (International Air Transport Association)<br>DE 3055 must be used if DE 3225 is used and does not contain an UN/LOCODE. |
| 3224 | Location name | C an..256 | **O** | | |
| C519 | RELATED LOCATION ONE IDENTIFICATION | C | **N** | | |
| 3223 | First related location name code | C an..25 | | | |
| 1131 | Code list identification code | C an..17 | | | |
| 3055 | Code list responsible agency code | C an..3 | | | |
| 3222 | First related location name | C an..70 | | | |
| C553 | RELATED LOCATION TWO IDENTIFICATION | C | **N** | | |
| 3233 | Second related location name code | C an..25 | | | |
| 1131 | Code list identification code | C an..17 | | | |
| 3055 | Code list responsible agency code | C an..3 | | | |
| 3232 | Second related location name | C an..70 | | | |
| 5479 | Relation code | C an..3 | **N** | | |

Segment Notes:

This segment is used to identify the location where the terms of delivery apply.

Example:
LOC+1+BE-BRU'

## 5. Segments Layout

Segment number: 32

| | | | |
|---|---|---|---|
| **SG14** | - C | 1000 - | PAC |
| **PAC** | - M | 1 - | Package |

Function:

To describe the number and type of packages/physical units.

| | | EDIFACT | GS1 | * | Description |
|---|---|---|---|---|---|
| 7224 | Package quantity | C n..8 | **O** | | |
| C531 | PACKAGING DETAILS | C | **O** | | |
| 7075 | Packaging level code | C an..3 | **O** | | |
| 7233 | Packaging related description code | C an..3 | **O** | | |
| 7073 | Packaging terms and conditions code | C an..3 | **O** | | 1 = Packaging cost paid by supplier<br>2 = Packaging cost paid by recipient<br>3 = Packaging cost not charged (returnable) |
| C202 | PACKAGE TYPE | C | **R** | | |
| 7065 | Package type description code | C an..17 | **A** | | |
| 1131 | Code list identification code | C an..17 | **O** | | |
| 3055 | Code list responsible agency code | C an..3 | **D** | | |
| 7064 | Type of packages | C an..35 | **O** | | |
| C402 | PACKAGE TYPE IDENTIFICATION | C | **N** | | |
| 7077 | Description format code | M an..3 | | | |
| 7064 | Type of packages | M an..35 | | | |
| 7143 | Item type identification code | C an..3 | | | |
| 7064 | Type of packages | C an..35 | | | |
| 7143 | Item type identification code | C an..3 | | | |
| C532 | RETURNABLE PACKAGE DETAILS | C | **D** | | Composite C532 is only used where the packaging being described is returnable. This composite identifies who is responsible for payment of its return. |
| 8395 | Returnable package freight payment responsibility code | C an..3 | **O** | | 1 = Paid by customer<br>3 = Paid by supplier |
| 8393 | Returnable package load contents code | C an..3 | **N** | | |

Segment Notes:

This segment is used to enable the invoice message to be used as valued despatch advice message by detailing the total count of each package type being invoiced.

Example:
PAC+6++CR'
The invoice relates to 6 crates.

## 5. Segments Layout

Segment number: 33

| | | | | |
|---|---|---|---|---|
| **SG16** | - C | 9999 | - | ALC-SG18-SG19-SG20-SG21-SG22 |
| **ALC** | - M | 1 | - | Allowance or charge |

Function:
To identify allowance or charge details.

| | | EDIFACT | GS1 | * | Description |
|---|---|---|---|---|---|
| 5463 | Allowance or charge code qualifier | M an..3 | **M** | | A = Allowance<br>C = Charge |
| C552 | ALLOWANCE/CHARGE INFORMATION | C | **O** | | |
| 1230 | Allowance or charge identifier | C an..35 | **D** | | If code '69' is used in DE 5189, the agreement number must be specified in DE 1230. |
| 5189 | Allowance or charge identification code | C an..3 | **O** | | 69 = Charge for a customer specific finish<br>105 = Yearly turnover |
| 4471 | Settlement means code | C an..3 | **O** | | 1 = Bill back<br>2 = Off invoice<br>5 = Charge to be paid by vendor<br>6 = Charge to be paid by customer |
| 1227 | Calculation sequence code | C an..3 | **D** | | 1 = First step of calculation<br>2 = Second step of calculation<br>etc, etc, etc,<br>9 = Ninth step of calculation<br>The calculation sequence indicator is used when multiple allowances and/or charges are applicable. If various allowances and/or charges percentages, quantities, monetary amounts, or, rates are applicable to the same base price, then the calculation sequence indicator will always equal one. If the various allowances and/or charges are applied against a fluctuating price (constantly changing because of the application of other allowances and/or charges) then the sequence of calculation is indicated using this data element.<br>If the allowance or charge is not to be applied against a fixed price then the calculation sequence indicator must be included. |
| C214 | SPECIAL SERVICES IDENTIFICATION | C | **D** | | |
| 7161 | Special service description code | C an..3 | **R** | | AJ = Adjustments<br>CAC = Cash discount<br>AEK = Cash on delivery service<br>EAB = Early payment allowance<br>FC = Freight charge<br>FI = Finance charge<br>HD = Handling<br>QD = Quantity discount<br>X40 = Allowance/charge regulated by law (GS1 Temporary Code) |
| 1131 | Code list identification code | C an..17 | **O** | | |
| 3055 | Code list responsible agency code | C an..3 | **D** | | |
| 7160 | Special service description | C an..35 | **O** | | |
| 7160 | Special service description | C an..35 | **O** | | |

## 5. Segments Layout

Segment number: 33

Segment Notes:

This segment is used to indicate any Allowances or Charges applicable to the total invoice, e.g. packaging costs. Allowances or charges specified in the detail section do not override or replace allowances or charges specified at header level but compliment them.

Example:
ALC+C++6++FC'
Freight charges to be paid by the customer.

## 5. Segments Layout

Segment number: 34

| | | | |
|---|---|---|---|
| **SG16** | - C | 9999 - | ALC-SG18-SG19-SG20-SG21-SG22 |
| **SG18** | - C | 1 - | QTY |
| **QTY** | - M | 1 - | Quantity |

Function:

To specify a pertinent quantity.

| | | EDIFACT | GS1 | * | Description |
|---|---|---|---|---|---|
| C186 | QUANTITY DETAILS | M | **M** | | |
| 6063 | Quantity type code qualifier | M an..3 | **M** | | 1 = Discrete quantity |
| 6060 | Quantity | M an..35 | **M** | | Actual quantity being allowed or charged. |
| 6411 | Measurement unit code | C an..3 | **D** | | DE 6411 is only used if a variable quantity product or service is being indicated in the allowance or charge. |

Segment Notes:

This segment is used to specify any quantity discounts or charges for the current ALC segment group.

Example:
QTY+1:152'

## 5. Segments Layout

Segment number: 35

| | | | | |
|---|---|---|---|---|
| **SG16** | - C | 9999 | - | ALC-SG18-SG19-SG20-SG21-SG22 |
| **SG19** | - C | 1 | - | PCD |
| **PCD** | - M | 1 | - | Percentage details |

Function:

To specify percentage information.

| | | EDIFACT | GS1 | * | Description |
|---|---|---|---|---|---|
| C501 | PERCENTAGE DETAILS | M | **M** | | |
| 5245 | Percentage type code qualifier | M an..3 | **M** | | 1 = Allowance<br>2 = Charge |
| 5482 | Percentage | C n..10 | **R** | | |
| 5249 | Percentage basis identification code | C an..3 | **O** | | 1 = Per unit<br>13 = Invoice value |
| 1131 | Code list identification code | C an..17 | **O** | | |
| 3055 | Code list responsible agency code | C an..3 | **D** | | |
| 4405 | Status description code | C an..3 | **N** | | |

Segment Notes:

This segment is used to specify any percentage discounts or charges for the current ALC segment group.

Example:
PCD+1:1.45:13'

## 5. Segments Layout

Segment number: 36

| | | | |
|---|---|---|---|
| **SG16** | - C | 9999 - | ALC-SG18-SG19-SG20-SG21-SG22 |
| **SG20** | - C | 2 - | MOA |
| **MOA** | - M | 1 - | Monetary amount |

Function:

To specify a monetary amount.

| | | EDIFACT | GS1 | * | Description |
|---|---|---|---|---|---|
| C516 | MONETARY AMOUNT | M | **M** | | |
| 5025 | Monetary amount type code qualifier | M an..3 | **M** | | 8 = Allowance or charge amount<br>23 = Charge amount<br>236 = Amount subject to price adjustment<br>286 = Administration charge<br>529 = Calculation basis which includes all taxes except VAT |
| 5004 | Monetary amount | C n..35 | **R** | | |
| 6345 | Currency identification code | C an..3 | **N** | | |
| 6343 | Currency type code qualifier | C an..3 | **N** | | |
| 4405 | Status description code | C an..3 | **N** | | |

Segment Notes:

This segment is used to specify any monetary discounts or charges for the current ALC segment group.

Example:
MOA+8:125.00'

## 5. Segments Layout

Segment number: 37

| | | | | |
|---|---|---|---|---|
| **SG16** | - C | 9999 | - | ALC-SG18-SG19-SG20-SG21-SG22 |
| **SG21** | - C | 1 | - | RTE |
| **RTE** | - M | 1 | - | Rate details |

Function:

To specify rate information.

| | | EDIFACT | GS1 | * | Description |
|---|---|---|---|---|---|
| C128 | RATE DETAILS | M | **M** | | |
| 5419 | Rate type code qualifier | M an..3 | **M** | | 1 = Allowance rate<br>2 = Charge rate |
| 5420 | Unit price basis rate | M n..15 | **M** | | Used to identify the monetary value. |
| 5284 | Unit price basis value | C n..9 | **O** | | The quantity required for the rate to be effective. |
| 6411 | Measurement unit code | C an..3 | **D** | | DE 6411 is only used if a variable quantity product or service is being indicated in the allowance or charge. |
| 4405 | Status description code | C an..3 | **N** | | |

Segment Notes:

This segment is used to specify rate discounts or charges for the current ALC segment group.

Example:
RTE+1:500:100'
Allowance rate of 500 EUR per 100 units ( the value is expressed in the currency of the message).

## 5. Segments Layout

Segment number: 38

| | | | |
|---|---|---|---|
| **SG16** | - C | 9999 - | ALC-SG18-SG19-SG20-SG21-SG22 |
| **SG22** | - C | 5 - | TAX-MOA |
| **TAX** | - M | 1 - | Duty/tax/fee details |

Function:

To specify relevant duty/tax/fee information.

| | | EDIFACT | GS1 | * | Description |
|---|---|---|---|---|---|
| 5283 | Duty or tax or fee function code qualifier | M an..3 | **M** | | 5 = Customs duty<br>7 = Tax |
| C241 | DUTY/TAX/FEE TYPE | C | **D** | | |
| 5153 | Duty or tax or fee type name code | C an..3 | **O** | | GST = Goods and services tax<br>VAT = Value added tax |
| 1131 | Code list identification code | C an..17 | **O** | | |
| 3055 | Code list responsible agency code | C an..3 | **D** | | |
| 5152 | Duty or tax or fee type name | C an..35 | **O** | | |
| C533 | DUTY/TAX/FEE ACCOUNT DETAIL | C | **O** | | |
| 5289 | Duty or tax or fee account code | M an..6 | **M** | | |
| 1131 | Code list identification code | C an..17 | **O** | | |
| 3055 | Code list responsible agency code | C an..3 | **D** | | |
| 5286 | Duty or tax or fee assessment basis value | C an..15 | **O** | | |
| C243 | DUTY/TAX/FEE DETAIL | C | **A** | | |
| 5279 | Duty or tax or fee rate code | C an..7 | **O** | | |
| 1131 | Code list identification code | C an..17 | **O** | | |
| 3055 | Code list responsible agency code | C an..3 | **D** | | |
| 5278 | Duty or tax or fee rate | C an..17 | **R** | | The actual rate of tax/duty. |
| 5273 | Duty or tax or fee rate basis code | C an..12 | **O** | | |
| 1131 | Code list identification code | C an..17 | **O** | | |
| 3055 | Code list responsible agency code | C an..3 | **D** | | |
| 5305 | Duty or tax or fee category code | C an..3 | **D** | | A = Mixed tax rate<br>E = Exempt from tax<br>S = Standard rate |
| 3446 | Party tax identifier | C an..20 | **O** | | |
| 1227 | Calculation sequence code | C an..3 | **N** | | |

Segment Notes:

This segment is used to signify whether the allowances and charges specified in SG16 are subject to tax.

Example:
TAX+7+VAT+++:::21+S'

## 5. Segments Layout

Segment number: 38

| Dependency Notes: |
| --- |
| DE C241 and 5305: Tax types and categories will vary from country to country. They should be defined by national guidelines. |

## 5. Segments Layout

Segment number: 39

| | | | |
|---|---|---|---|
| **SG16** | - C | 9999 - | ALC-SG18-SG19-SG20-SG21-SG22 |
| **SG22** | - C | 5 - | TAX-MOA |
| **MOA** | - C | 1 - | Monetary amount |

Function:

To specify a monetary amount.

| | | EDIFACT | GS1 | * | Description |
|---|---|---|---|---|---|
| C516 | MONETARY AMOUNT | M | **M** | | |
| 5025 | Monetary amount type code qualifier | M an..3 | **M** | | 124 = Tax amount<br>125 = Taxable amount |
| 5004 | Monetary amount | C n..35 | **R** | | |
| 6345 | Currency identification code | C an..3 | **N** | | |
| 6343 | Currency type code qualifier | C an..3 | **N** | | |
| 4405 | Status description code | C an..3 | **N** | | |

Segment Notes:

This segment is used to indicate tax or duty amount for the tax rates specified in the previous TAX segment.

Example:
MOA+124:154.76'

## 5. Segments Layout

Segment number: 40

| | | | |
|---|---|---|---|
| **SG24** | - C | 1 - | AJT |
| **AJT** | - M | 1 - | Adjustment details |

Function:

To identify the reason for an adjustment.

| | | EDIFACT | GS1 | * | Description |
|---|---|---|---|---|---|
| 4465 | Adjustment reason description code | M an..3 | **M** | | 3 = Damaged goods<br>5 = Price query<br>9 = Invoice error<br>If adjustments are made due to national tax practices then code values to identify these national practices may be allocated for use with this data element by national GS1 Member Organisations. |
| 1082 | Line item identifier | C an..6 | **N** | | |

Segment Notes:

This segment is used to indicate the reason for an adjustment to the current document.
Adjustments can be given only if the invoice type is a credit note or debit note (BGM, DE1001 = 83, 84, 381 or 383).

Example:
AJT+3'

## 5. Segments Layout

Segment number: 41

| | | | |
|---|---|---|---|
| **SG26** | - C | 9999999 - | LIN-PIA-IMD-MEA-QTY-ALI-DTM-GIN-QVR-FTX-SG27-SG28-SG29-SG30-SG31-SG33-SG34-SG35-SG39-SG45-SG47 |
| **LIN** | - M | 1 - | Line item |

Function:

To identify a line item and configuration.

| | | EDIFACT | GS1 | * | Description |
|---|---|---|---|---|---|
| 1082 | Line item identifier | C an..6 | **R** | | Application generated number of the item lines within the invoice. |
| 1229 | Action request/notification description code | C an..3 | **N** | | |
| C212 | ITEM NUMBER IDENTIFICATION | C | **D** | | This composite is only used for the identification of GS1 codes. If another coding structure is required, e. g., HIBC, this composite will not be used and the code will be detailed in the PIA segment. |
| 7140 | Item identifier | C an..35 | **R** | | Format n..14.<br>GTIN - this is the number of the article being invoiced. |
| 7143 | Item type identification code | C an..3 | **R** | * | SRV = GS1 Global Trade Item Number |
| 1131 | Code list identification code | C an..17 | **N** | | |
| 3055 | Code list responsible agency code | C an..3 | **N** | | |
| C829 | SUB-LINE INFORMATION | C | **D** | | |
| 5495 | Sub-line indicator code | C an..3 | **R** | * | 1 = Sub-line information |
| 1082 | Line item identifier | C an..6 | **R** | | |
| 1222 | Configuration level number | C n..2 | **N** | | |
| 7083 | Configuration operation code | C an..3 | **N** | | |

Segment Notes:

This segment is used to identify the item being invoiced.
If Global Trade Item Numbers are available it is mandatory to use GTIN within the LIN segment.
The detail section is formed by a repeating group of segments, always starting with a LIN segment.

Note on DE 1082:
Numbering rule: In Part I, section 4.10 there is the recommendation “Within EANCOM® it is recommended that the line numbers used in the first occurrence of data element 1082 in the LIN segment be sequential, starting at 1 for each new message.”

Note on DE 7140:
Only the following significant digits are possible:
- 8 digits for GTIN 8 codes
- 12 digits for GTIN 12 codes
- 13 digits for GTIN 13 codes
- 14 digits for GTIN 14 codes

Dependency Note:
C829 is only used when sub-lines are required.
FOR A COMPLETE DESCRIPTION ON THE USAGE OF SUB-LINES PLEASE REFER TO PART I, SECTION 4.10.

LIN+1++4000862141404:SRV'

## 5. Segments Layout

Segment number: 42

| | | | | |
|---|---|---|---|---|
| **SG26** | - C | 9999999 | - | LIN-PIA-IMD-MEA-QTY-ALI-DTM-GIN-QVR-FTX-SG27-SG28-SG29-SG30-SG31-SG33-SG34-SG35-SG39-SG45-SG47 |
| **PIA** | - C | 25 | - | Additional product id |

Function:

To specify additional or substitutional item identification codes.

| | | EDIFACT | GS1 | * | Description |
|---|---|---|---|---|---|
| 4347 | Product identifier code qualifier | M an..3 | **M** | * | 1 = Additional identification<br>4 = Substituted for<br>5 = Product identification<br>Product Id function coded has the following restricted coded functions:<br>1 - Additional Identification - To provide an additional identity for the product identified in the LIN segment. The additional identification can consist of :<br>A supplemental identification which provides more information complementary to the main global trade number provided in the LIN segment, e.g. a batch number, promotional variant number, product group number, etc.<br>An alternative identification which may be used instead of the main GTIN provided in the LIN segment, e.g. a buyers article number, an HIBC code, etc.<br>4 - Substituted For - To provide the number of a product which has been substituted for the product identified with the number provided in the LIN segment.<br>In the Invoice this function code may be used to inform trading partners of the number of the product originally ordered which has been substituted for another product identified in the LIN segment.<br>5 - Product Identification - To provide the primary product identification code when no GTIN has been provided in the LIN segment. |
| C212 | ITEM NUMBER IDENTIFICATION | M | **M** | | |
| 7140 | Item identifier | C an..35 | **R** | | |
| 7143 | Item type identification code | C an..3 | **R** | | PV = Promotional variant number<br>HS = Harmonised system<br>IN = Buyer's item number<br>SA = Supplier's article number<br>SRV = GS1 Global Trade Item Number<br>EWC = European Waste Catalogue (GS1 Temporary Code) |
| 1131 | Code list identification code | C an..17 | **O** | | |
| 3055 | Code list responsible agency code | C an..3 | **D** | | 9 = GS1<br>91 = Assigned by supplier or supplier's agent<br>92 = Assigned by buyer or buyer's agent |
| C212 | ITEM NUMBER IDENTIFICATION | C | **O** | | |
| 7140 | Item identifier | C an..35 | **R** | | |
| 7143 | Item type identification code | C an..3 | **R** | | |
| 1131 | Code list identification code | C an..17 | **O** | | |

## 5. Segments Layout

Segment number: 42

| | | EDIFACT | GS1 | * | Description |
|---|---|---|---|---|---|
| 3055 | Code list responsible agency code | C an..3 | **D** | | |
| C212 | ITEM NUMBER IDENTIFICATION | C | **O** | | |
| 7140 | Item identifier | C an..35 | **R** | | |
| 7143 | Item type identification code | C an..3 | **R** | | |
| 1131 | Code list identification code | C an..17 | **O** | | |
| 3055 | Code list responsible agency code | C an..3 | **D** | | |
| C212 | ITEM NUMBER IDENTIFICATION | C | **O** | | |
| 7140 | Item identifier | C an..35 | **R** | | |
| 7143 | Item type identification code | C an..3 | **R** | | |
| 1131 | Code list identification code | C an..17 | **O** | | |
| 3055 | Code list responsible agency code | C an..3 | **D** | | |
| C212 | ITEM NUMBER IDENTIFICATION | C | **O** | | |
| 7140 | Item identifier | C an..35 | **R** | | |
| 7143 | Item type identification code | C an..3 | **R** | | |
| 1131 | Code list identification code | C an..17 | **O** | | |
| 3055 | Code list responsible agency code | C an..3 | **D** | | |

Segment Notes:

This segment is used to specify additional or substitutional item identification codes such as a buyer's or supplier's item number.

Examples:
PIA+1+ABC5343:IN'
In this example the PIA segment is used to provide an additional identification to the GTIN provided in the LIN segment. The GTIN 4000862141404 provided in the LIN segment refers to the internal buyer's item number ABC5343.

PIA+4+5412345111184:SRV'
In this example the PIA segment is used to provide the number of the product which has been substituted by the invoiced product identified in the LIN segment by the GTIN 4000862141404.

PIA+5+2209953C001L:AC'
This example details the HIBC code 2209953C001L which is provided as the primary product code because no GTIN was provided in the LIN segment.

## 5. Segments Layout

Segment number: 43

| | | | |
|---|---|---|---|
| **SG26** | - C | 9999999 - | LIN-PIA-IMD-MEA-QTY-ALI-DTM-GIN-QVR-FTX-SG27-SG28-SG29-SG30-SG31-SG33-SG34-SG35-SG39-SG45-SG47 |
| **IMD** | - C | 99 - | Item description |

Function:

To describe an item in either an industry or free format.

| | | EDIFACT | GS1 | * | Description |
|---|---|---|---|---|---|
| 7077 | Description format code | C an..3 | **O** | * | A = Free-form long description<br>B = Code and text<br>C = Code (from industry code list)<br>E = Free-form short description<br>F = Free-form<br>S = Structured (from industry code list) |
| C272 | ITEM CHARACTERISTIC | C | **O** | | |
| 7081 | Item characteristic code | C an..3 | **R** | | |
| 1131 | Code list identification code | C an..17 | **O** | | |
| 3055 | Code list responsible agency code | C an..3 | **D** | * | 9 = GS1<br>Must be used if DE7081 contains an GS1 code. |
| C273 | ITEM DESCRIPTION | C | **A** | | |
| 7009 | Item description code | C an..17 | **O** | | CU = Consumer unit (GS1 Permanent Code)<br>DU = Despatch unit (GS1 Permanent Code)<br>RC = Returnable container (GS1 Permanent Code)<br>SER = Service (GS1 Permanent Code)<br>TU = Traded unit (GS1 Permanent Code)<br>VQ = Variable quantity product (GS1 Permanent Code) |
| 1131 | Code list identification code | C an..17 | **O** | | |
| 3055 | Code list responsible agency code | C an..3 | **D** | | 9 = GS1<br>91 = Assigned by supplier or supplier's agent<br>92 = Assigned by buyer or buyer's agent |
| 7008 | Item description | C an..256 | **O** | | |
| 7008 | Item description | C an..256 | **O** | | |
| 3453 | Language name code | C an..3 | **O** | | |
| 7383 | Surface or layer code | C an..3 | **N** | | |

Segment Notes:

This segment is used to provide a description for the current line item.
It is recommended that this segment only be used for coded descriptions. Data element 7008 in clear text should only be used when no product code is available or when free-form descriptions are required by trading partners to communicate basic product descriptions.
GS1 recommends that free text product description be provided in the EANCOM price/sales catalogue (PRICAT) and there after referred to using a GTIN.
If you wish to indicate that promotional details are marked on the package, then this should be indicated in DE 7233 in the PAC segment.

Example:
IMD+C++TU::9'
IMD+F++:::CORN CRUNCHIES:CASE'

## 5. Segments Layout

Segment number: 44

| | | | |
|---|---|---|---|
| **SG26** | - C | 9999999 - | LIN-PIA-IMD-MEA-QTY-ALI-DTM-GIN-QVR-FTX-SG27-SG28-SG29-SG30-SG31-SG33-SG34-SG35-SG39-SG45-SG47 |
| **MEA** | - C | 5 - | Measurements |

Function:

To specify physical measurements, including dimension tolerances, weights and counts.

| | | EDIFACT | GS1 | * | Description |
|---|---|---|---|---|---|
| 6311 | Measurement purpose code qualifier | M an..3 | **M** | | PD = Physical dimensions (product ordered)<br>SO = Storage limitation<br>TL = Transportation equipment limitations |
| C502 | MEASUREMENT DETAILS | C | **A** | | |
| 6313 | Measured attribute code | C an..3 | **A** | | AAA = Unit net weight<br>ACG = Chargeable weight<br>HT = Height dimension<br>LN = Length dimension<br>WD = Width dimension |
| 6321 | Measurement significance code | C an..3 | **O** | | 3 = Approximately<br>4 = Equal to |
| 6155 | Non-discrete measurement name code | C an..17 | **N** | | |
| 6154 | Non-discrete measurement name | C an..70 | **N** | | |
| C174 | VALUE/RANGE | C | **R** | | |
| 6411 | Measurement unit code | M an..3 | **M** | | |
| 6314 | Measurement value | C an..18 | **O** | | |
| 6162 | Range minimum value | C n..18 | **O** | | |
| 6152 | Range maximum value | C n..18 | **O** | | |
| 6432 | Significant digits quantity | C n..2 | **O** | | |
| 7383 | Surface or layer code | C an..3 | **N** | | |

Segment Notes:

This segment is used to specify the physical dimensions, storage limitations, or transport equipment limitations of a product.

Example:
Product with dimensions 500mm x 200mm x 100mm.
MEA+PD+HT+MMT:500'
MEA+PD+LN+MMT:200'
MEA+PD+WD+MMT:100'

## 5. Segments Layout

Segment number: 45

| | | | |
|---|---|---|---|
| **SG26** | - C | 9999999 - | LIN-PIA-IMD-MEA-QTY-ALI-DTM-GIN-QVR-FTX-SG27-SG28-SG29-SG30-SG31-SG33-SG34-SG35-SG39-SG45-SG47 |
| **QTY** | - C | 5 - | Quantity |

Function:

To specify a pertinent quantity.

| | | EDIFACT | GS1 | * | Description |
|---|---|---|---|---|---|
| C186 | QUANTITY DETAILS | M | **M** | | |
| 6063 | Quantity type code qualifier | M an..3 | **M** | * | 1 = Discrete quantity<br>12 = Despatch quantity<br>21 = Ordered quantity<br>46 = Delivered quantity<br>47 = Invoiced quantity<br>59 = Number of consumer units in the traded unit<br>61 = Return quantity<br>192 = Free goods quantity<br>194 = Received and accepted<br>510 = Minimum invoicing quantity<br>45E = Number of units in higher packaging or configuration level (GS1 Temporary Code)<br>The code value '45E' is used at sub-line level to indicate the quantity of sub-line items included in the main line being invoiced. |
| 6060 | Quantity | M an..35 | **M** | | |
| 6411 | Measurement unit code | C an..3 | **D** | | LNE = Printed line count (GS1 Temporary Code) |

Segment Notes:

This segment is used to specify quantities related to the current line item.

Example:
QTY+47:40'

Dependency Notes:
DE 6411: This DE is only used if the product being invoiced is of variable quantity.

## 5. Segments Layout

Segment number: 46

| | | | | |
|---|---|---|---|---|
| **SG26** | - C | 9999999 | - | LIN-PIA-IMD-MEA-QTY-ALI-DTM-GIN-QVR-FTX-SG27-SG28-SG29-SG30-SG31-SG33-SG34-SG35-SG39-SG45-SG47 |
| **ALI** | - C | 5 | - | Additional information |

Function:

To indicate that special conditions due to the origin, customs preference, fiscal or commercial factors are applicable.

| | | EDIFACT | GS1 | * | Description |
|---|---|---|---|---|---|
| 3239 | Country of origin name code | C an..3 | **O** | | Use ISO 3166 two alpha country code. |
| 9213 | Duty regime type code | C an..3 | **O** | | |
| 4183 | Special condition code | C an..3 | **O** | | 6 = Subject to bonus<br>15 = Not subject to discount |
| 4183 | Special condition code | C an..3 | **O** | | |
| 4183 | Special condition code | C an..3 | **O** | | |
| 4183 | Special condition code | C an..3 | **O** | | |
| 4183 | Special condition code | C an..3 | **O** | | |

Segment Notes:

This segment is used to indicate special conditions or the country of origin of the current line item.

Example:
ALI+EU'

## 5. Segments Layout

Segment number: 47

| | | | | |
|---|---|---|---|---|
| **SG26** | - C | 9999999 | - | LIN-PIA-IMD-MEA-QTY-ALI-DTM-GIN-QVR-FTX-SG27-SG28-SG29-SG30-SG31-SG33-SG34-SG35-SG39-SG45-SG47 |
| **DTM** | - C | 35 | - | Date/time/period |

Function:

To specify date, and/or time, or period.

| | | EDIFACT | GS1 | * | Description |
|---|---|---|---|---|---|
| C507 | DATE/TIME/PERIOD | M | **M** | | |
| 2005 | Date or time or period function code qualifier | M an..3 | **M** | * | 1 = Service completion date/time, actual<br>11 = Despatch date and/or time<br>35 = Delivery date/time, actual<br>36 = Expiry date<br>50 = Goods receipt date/time<br>100 = Product ageing period before delivery<br>263 = Invoicing period<br>267 = Rate/price date/time |
| 2380 | Date or time or period value | C an..35 | **R** | | |
| 2379 | Date or time or period format code | C an..3 | **R** | | 102 = CCYYMMDD<br>718 = CCYYMMDD-CCYYMMDD |

Segment Notes:

This segment is used to specify the date of despatch, delivery, or receipt of the current line item.

Example:
DTM+35:20020801:102'

## 5. Segments Layout

Segment number: 48

| | | | | |
|---|---|---|---|---|
| **SG26** | - C | 9999999 | - | LIN-PIA-IMD-MEA-QTY-ALI-DTM-GIN-QVR-FTX-SG27-SG28-SG29-SG30-SG31-SG33-SG34-SG35-SG39-SG45-SG47 |
| **GIN** | - C | 1000 | - | Goods identity number |

Function:

To give specific identification numbers, either as single numbers or ranges.

| | | EDIFACT | GS1 | * | Description |
|---|---|---|---|---|---|
| 7405 | Object identification code qualifier | M an..3 | **M** | * | BN = Serial number |
| C208 | IDENTITY NUMBER RANGE | M | **M** | | |
| 7402 | Object identifier | M an..35 | **M** | | |
| 7402 | Object identifier | C an..35 | **O** | | |
| C208 | IDENTITY NUMBER RANGE | C | **O** | | |
| 7402 | Object identifier | M an..35 | **M** | | |
| 7402 | Object identifier | C an..35 | **O** | | |
| C208 | IDENTITY NUMBER RANGE | C | **O** | | |
| 7402 | Object identifier | M an..35 | **M** | | |
| 7402 | Object identifier | C an..35 | **O** | | |
| C208 | IDENTITY NUMBER RANGE | C | **O** | | |
| 7402 | Object identifier | M an..35 | **M** | | |
| 7402 | Object identifier | C an..35 | **O** | | |
| C208 | IDENTITY NUMBER RANGE | C | **O** | | |
| 7402 | Object identifier | M an..35 | **M** | | |
| 7402 | Object identifier | C an..35 | **O** | | |

Segment Notes:

This segment is used to indicate a serial number or a range of numbers.

Example:
GIN+BN+AS-1299:AS-1350'

## 5. Segments Layout

Segment number: 49

| | | | |
|---|---|---|---|
| **SG26** | - C | 9999999 - | LIN-PIA-IMD-MEA-QTY-ALI-DTM-GIN-QVR-FTX-SG27-SG28-SG29-SG30-SG31-SG33-SG34-SG35-SG39-SG45-SG47 |
| **QVR** | - C | 1 - | Quantity variances |

Function:

To specify item details relating to quantity variances.

| | | EDIFACT | GS1 | * | Description |
|---|---|---|---|---|---|
| C279 | QUANTITY DIFFERENCE INFORMATION | C | **R** | | |
| 6064 | Quantity variance value | M n..15 | **M** | | Specify the actual variance amount here. |
| 6063 | Quantity type code qualifier | C an..3 | **R** | * | 12 = Despatch quantity<br>21 = Ordered quantity<br>61 = Return quantity<br>119 = Short shipped<br>121 = Over shipped<br>124 = Damaged goods<br>The codes 12 and 21 should only be used to report differences between the invoiced quantity and what was actually despatched or ordered. The codes 61 and 124 should only be used to (negatively) indicate the quantity of items which was delivered but found to be damaged, and/or returned. |
| 4221 | Discrepancy nature identification code | C an..3 | **O** | | BP = Shipment partial - back order to follow<br>CP = Shipment partial - considered complete, no backorder<br>OW = Item out of stock at wholesaler<br>TW = Item temporarily discontinued by wholesaler |
| C960 | REASON FOR CHANGE | C | **O** | | |
| 4295 | Change reason description code | C an..3 | **O** | | AJT = Adjustment (GS1 Temporary Code) |
| 1131 | Code list identification code | C an..17 | **O** | | |
| 3055 | Code list responsible agency code | C an..3 | **D** | | 9 = GS1 |
| 4294 | Change reason description | C an..35 | **O** | | |

Segment Notes:

This segment is used to specify any variances between what was ordered, what was shipped/despatched and what is being invoiced.
For negative values (e.g. damaged goods not accepted) the variance must be expressed as negative.

Example:
QVR+-20:21'
This example shows a variance of 20 between what is being invoiced (QTY at LIN level) and what was originally ordered.

## 5. Segments Layout

Segment number: 50

| | | | |
|---|---|---|---|
| **SG26** | - C | 9999999 - | LIN-PIA-IMD-MEA-QTY-ALI-DTM-GIN-QVR-FTX-SG27-SG28-SG29-SG30-SG31-SG33-SG34-SG35-SG39-SG45-SG47 |
| **FTX** | - C | 99 - | Free text |

Function:

To provide free form or coded text information.

| | | EDIFACT | GS1 | * | Description |
|---|---|---|---|---|---|
| 4451 | Text subject code qualifier | M an..3 | **M** | | BAQ = VAT exemption reason<br>CHG = Change information<br>ZZZ = Mutually defined |
| 4453 | Free text function code | C an..3 | **O** | * | 1 = Text for subsequent use |
| C107 | TEXT REFERENCE | C | **D** | | This composite is only used when trading partners have agreed to use mutually defined code values. |
| 4441 | Free text value code | M an..17 | **M** | | 002 = ..... Standard text code..... |
| 1131 | Code list identification code | C an..17 | **O** | | |
| 3055 | Code list responsible agency code | C an..3 | **D** | | 91 = Assigned by supplier or supplier's agent<br>92 = Assigned by buyer or buyer's agent |
| C108 | TEXT LITERAL | C | **D** | | This composite is only used if coded text can not be used. |
| 4440 | Free text value | M an..512 | **M** | | |
| 4440 | Free text value | C an..512 | **O** | | |
| 4440 | Free text value | C an..512 | **O** | | |
| 4440 | Free text value | C an..512 | **O** | | |
| 4440 | Free text value | C an..512 | **O** | | |
| 3453 | Language name code | C an..3 | **D** | | ISO 639 two alpha code<br>This data element is only used when non coded free text has been provided in data element C108 |
| 4447 | Free text format code | C an..3 | **N** | | |

Segment Notes:

This segment is used to provide free form or coded text information which applies to the current line item.
The use of the FTX segment in free form is not recommended since in most cases it inhibits automatic processing of the Invoice. Coded references to standard texts is an available functionality which enables automatic processing and reduces transmission and processing overheads. Standard texts should be mutually defined among trading partners and can be used to cover legal or other requirements.

Example:
FTX+ZZZ+1+002::91'
e.g. Standard Text Code 002 = 'Missing items will be shipped next week.'

## 5. Segments Layout

Segment number: 51

| | | | | |
|---|---|---|---|---|
| **SG26** | - C | 9999999 | - | LIN-PIA-IMD-MEA-QTY-ALI-DTM-GIN-QVR-FTX-SG27-SG28-SG29-SG30-SG31-SG33-SG34-SG35-SG39-SG45-SG47 |
| **SG27** | - C | 99 | - | MOA |
| **MOA** | - M | 1 | - | Monetary amount |

Function:

To specify a monetary amount.

| | | EDIFACT | GS1 | * | Description |
|---|---|---|---|---|---|
| C516 | MONETARY AMOUNT | M | **M** | | |
| 5025 | Monetary amount type code qualifier | M an..3 | **M** | | 203 = Line item amount<br>227 = Deposit<br>388 = Total amount including Value Added Tax (VAT)<br>496 = Total returnable packages deposit amount<br>505 = Rental amount<br>X41 = Total returnable items rental fee amount (GS1 Temporary Code)<br>X42 = Rental fee (GS1 Temporary Code) |
| 5004 | Monetary amount | C n..35 | **R** | | |
| 6345 | Currency identification code | C an..3 | **O** | | ISO 4217 three alpha |
| 6343 | Currency type code qualifier | C an..3 | **O** | * | 4 = Invoicing currency<br>10 = Pricing currency<br>11 = Payment currency |
| 4405 | Status description code | C an..3 | **N** | | |

Segment Notes:

This segment is used to specify monetary amounts related to the current line item.
Item Amount = Quantity * Unit Net Price

Item Amount = (Quantity * Unit Gross Price) + Charges - Allowances

Example:
MOA+203:580'
This example shows the line item amount as 580. This figure is derived from multiplying the invoiced quantity, 40, by the price 14.50.

## 5. Segments Layout

Segment number: 52

| | | | | |
|---|---|---|---|---|
| **SG26** | - C | 9999999 | - | LIN-PIA-IMD-MEA-QTY-ALI-DTM-GIN-QVR-FTX-SG27-SG28-SG29-SG30-SG31-SG33-SG34-SG35-SG39-SG45-SG47 |
| **SG28** | - C | 10 | - | PAT-DTM-PCD-MOA |
| **PAT** | - M | 1 | - | Payment terms basis |

Function:

To specify the payment terms basis.

Notes:
1. This segment will be removed effective with directory D.02B.

| | | EDIFACT | GS1 | * | Description |
|---|---|---|---|---|---|
| 4279 | Payment terms type code qualifier | M an..3 | **M** | | 1 = Basic<br>3 = Fixed date<br>7 = Extended<br>20 = Penalty terms<br>22 = Discount<br>ZZZ = Mutually defined |
| C110 | PAYMENT TERMS | C | **N** | | |
| 4277 | Payment terms description identifier | M an..17 | | | |
| 1131 | Code list identification code | C an..17 | | | |
| 3055 | Code list responsible agency code | C an..3 | | | |
| 4276 | Payment terms description | C an..35 | | | |
| 4276 | Payment terms description | C an..35 | | | |
| C112 | TERMS/TIME INFORMATION | C | **O** | | |
| 2475 | Time reference code | M an..3 | **M** | | 5 = Date of invoice<br>52 = Due date of negotiable instrument |
| 2009 | Terms time relation code | C an..3 | **O** | | 3 = After reference |
| 2151 | Period type code | C an..3 | **O** | | D = Day<br>M = Month<br>WD = Working days<br>Y = Year |
| 2152 | Period count quantity | C n..3 | **O** | | |

Segment Notes:

This segment is used to identify specific payment terms for the current line item.

Example:
The following example indicates extended payment terms with payment due 90 days after the reference date which is the invoice date.
PAT+7++5:3:D:90'

## 5. Segments Layout

Segment number: 53

| | | | | |
|---|---|---|---|---|
| **SG26** | - C | 9999999 | - | LIN-PIA-IMD-MEA-QTY-ALI-DTM-GIN-QVR-FTX-SG27-SG28-SG29-SG30-SG31-SG33-SG34-SG35-SG39-SG45-SG47 |
| **SG28** | - C | 10 | - | PAT-DTM-PCD-MOA |
| **DTM** | - C | 5 | - | Date/time/period |

Function:

To specify date, and/or time, or period.

| | | EDIFACT | GS1 | * | Description |
|---|---|---|---|---|---|
| C507 | DATE/TIME/PERIOD | M | **M** | | |
| 2005 | Date or time or period function code qualifier | M an..3 | **M** | | 12 = Terms discount due date/time<br>13 = Terms net due date<br>140 = Payment due date<br>209 = Value date |
| 2380 | Date or time or period value | C an..35 | **R** | | |
| 2379 | Date or time or period format code | C an..3 | **R** | | 102 = CCYYMMDD<br>718 = CCYYMMDD-CCYYMMDD |

Segment Notes:

This segment is used to specify any dates associated with the payment terms provided in the previous PAT segment.

Example:
DTM+13:20020830:102'

## 5. Segments Layout

Segment number: 54

| | | | | |
|---|---|---|---|---|
| **SG26** | - C | 9999999 | - | LIN-PIA-IMD-MEA-QTY-ALI-DTM-GIN-QVR-FTX-SG27-SG28-SG29-SG30-SG31-SG33-SG34-SG35-SG39-SG45-SG47 |
| **SG28** | - C | 10 | - | PAT-DTM-PCD-MOA |
| **PCD** | - C | 99 | - | Percentage details |

Function:

To specify percentage information.

| | | EDIFACT | GS1 | * | Description |
|---|---|---|---|---|---|
| C501 | PERCENTAGE DETAILS | M | **M** | | |
| 5245 | Percentage type code qualifier | M an..3 | **M** | | 12 = Discount<br>15 = Penalty percentage |
| 5482 | Percentage | C n..10 | **R** | | |
| 5249 | Percentage basis identification code | C an..3 | **N** | | |
| 1131 | Code list identification code | C an..17 | **N** | | |
| 3055 | Code list responsible agency code | C an..3 | **N** | | |
| 4405 | Status description code | C an..3 | **N** | | |

Segment Notes:

This segment specifies the penalty or discount percentage applicable for the terms of payment defined in the PAT segment.

Example:
PCD+12:2.5'

## 5. Segments Layout

Segment number: 55

| | | | | |
|---|---|---|---|---|
| **SG26** | - C | 9999999 | - | LIN-PIA-IMD-MEA-QTY-ALI-DTM-GIN-QVR-FTX-SG27-SG28-SG29-SG30-SG31-SG33-SG34-SG35-SG39-SG45-SG47 |
| **SG28** | - C | 10 | - | PAT-DTM-PCD-MOA |
| **MOA** | - C | 1 | - | Monetary amount |

Function:

To specify a monetary amount.

| | | EDIFACT | GS1 | * | Description |
|---|---|---|---|---|---|
| C516 | MONETARY AMOUNT | M | **M** | | |
| 5025 | Monetary amount type code qualifier | M an..3 | **M** | | 52 = Discount amount<br>201 = Penalty amount |
| 5004 | Monetary amount | C n..35 | **R** | | |
| 6345 | Currency identification code | C an..3 | **N** | | |
| 6343 | Currency type code qualifier | C an..3 | **N** | | |
| 4405 | Status description code | C an..3 | **N** | | |

Segment Notes:

This segment specifies the penalty or discount monetary amount applicable for the terms of payment defined in the PAT segment.

Example:
MOA+201:100'

## 5. Segments Layout

Segment number: 56

| | | | | |
|---|---|---|---|---|
| **SG26** | - C | 9999999 | - | LIN-PIA-IMD-MEA-QTY-ALI-DTM-GIN-QVR-FTX-SG27-SG28-SG29-SG30-SG31-SG33-SG34-SG35-SG39-SG45-SG47 |
| **SG29** | - C | 25 | - | PRI-APR |
| **PRI** | - M | 1 | - | Price details |

Function:

To specify price information.

| | | EDIFACT | GS1 | * | Description |
|---|---|---|---|---|---|
| C509 | PRICE INFORMATION | C | **R** | | |
| 5125 | Price code qualifier | M an..3 | **M** | | AAA = Calculation net<br>AAA - The price stated is the net price including all allowances and charges and excluding taxes. Allowances and charges may be stated for information purposes only.<br>AAB = Calculation gross<br>AAB - The price stated is the gross price excluding all allowances, charges and taxes. Allowances and charges must be stated for net calculation purposes.<br>AAE = Information price, excluding allowances or charges, including taxes<br>AAF = Information price, excluding allowances or charges and taxes<br>AAH = Subject to escalation and price adjustment<br>AAQ = Firm price<br>ABL = Base price<br>ABM = Base price difference<br>Use the codes AAH, AAQ, ABL, ABM when dealing with CSA (customer specific articles). |
| 5118 | Price amount | C n..15 | **R** | | |
| 5375 | Price type code | C an..3 | **O** | | CA = Catalogue<br>CT = Contract |
| 5387 | Price specification code | C an..3 | **O** | | DPR = Discount price<br>PPR = Provisional price<br>PRP = Promotional price<br>RTP = Retail price<br>SRP = Suggested retail price |
| 5284 | Unit price basis value | C n..9 | **D** | | |
| 6411 | Measurement unit code | C an..3 | **D** | | |
| 5213 | Sub-line item price change operation code | C an..3 | **N** | | |

Segment Notes:

This segment is used to specify price information for the current line item.

Example:
For all the following examples the invoicing currency has already been identified as Pounds Sterling.
PRI+AAA:14.50:CA'
Net price of 14.50 (excluding tax) to be used for calculation purposes. This price includes all allowances and charges. The price is a catalogue price.

PRI+AAB:25:CT'
Gross calculation price of 25 (excluding tax) which does not include any allowances or charges. The price is a contract price.

## 5. Segments Layout

Segment number: 56

PRI+AAE:2.56:CA:SRP'
Price of 2.56 is a suggested retail price from the catalogue which does not include any allowances or charges but includes taxes.

PRI+AAF:4.20:CA:RTP'
Price of 4.20 is a retail price from the catalogue which does not include allowances, charges or taxes.

Dependency Notes:
Data elements 5284 and 6411 are used when a product is a variable quantity product, e.g. price per 200 kilos, or when the unit of measure for purchasing, delivery, and invoicing are different for a product, e.g. sugar is not a variable quantity product but ordered and delivered in packs, and invoiced in kilos or tonnes.

## 5. Segments Layout

Segment number: 57

| | | | | |
|---|---|---|---|---|
| **SG26** | - C | 9999999 | - | LIN-PIA-IMD-MEA-QTY-ALI-DTM-GIN-QVR-FTX-SG27-SG28-SG29-SG30-SG31-SG33-SG34-SG35-SG39-SG45-SG47 |
| **SG29** | - C | 25 | - | PRI-APR |
| **APR** | - C | 1 | - | Additional price information |

Function:

To provide information concerning pricing related to class of trade, price multiplier, and reason for change.

| | | EDIFACT | GS1 | * | Description |
|---|---|---|---|---|---|
| 4043 | Trade class code | C an..3 | **O** | | MF = Manufacturer |
| C138 | PRICE MULTIPLIER INFORMATION | C | **R** | | |
| 5394 | Price multiplier rate | M n..12 | **M** | | |
| 5393 | Price multiplier type code qualifier | C an..3 | **R** | | A = Price adjustment coefficient |
| C960 | REASON FOR CHANGE | C | **A** | | |
| 4295 | Change reason description code | C an..3 | **R** | * | X29 = Government price charge (GS1 Temporary Code) |
| 1131 | Code list identification code | C an..17 | **N** | | |
| 3055 | Code list responsible agency code | C an..3 | **O** | | |
| 4294 | Change reason description | C an..35 | **O** | | |

Segment Notes:

This segment is used to provide a reason for a change in the price specified in the PRI segment.

Example:
APR+MF+0.95:A+X29'

## 5. Segments Layout

Segment number: 58

| | | | | |
|---|---|---|---|---|
| **SG26** | - C | 9999999 | - | LIN-PIA-IMD-MEA-QTY-ALI-DTM-GIN-QVR-FTX-SG27-SG28-SG29-SG30-SG31-SG33-SG34-SG35-SG39-SG45-SG47 |
| **SG30** | - C | 10 | - | RFF-DTM |
| **RFF** | - M | 1 | - | Reference |

Function:

To specify a reference.

| | | EDIFACT | GS1 | * | Description |
|---|---|---|---|---|---|
| C506 | REFERENCE | M | **M** | | |
| 1153 | Reference code qualifier | M an..3 | **M** | | AAK = Despatch advice number<br>ALO = Receiving advice number<br>CR = Customer reference number<br>CT = Contract number<br>DQ = Delivery note number<br>IP = Import licence number<br>ON = Order number (buyer)<br>PL = Price list number<br>RF = Export reference number<br>SZ = Specification number<br>VN = Order number (supplier) |
| 1154 | Reference identifier | C an..70 | **R** | | |
| 1156 | Document line identifier | C an..6 | **O** | | |
| 4000 | Reference version identifier | C an..35 | **N** | | |
| 1060 | Revision identifier | C an..6 | **N** | | |

Segment Notes:

This segment is used to provide references specific to the line item, and overrides any global references provided in the heading section of the invoice when the same qualifier is used.

Example:
RFF+AAK:8306'

## 5. Segments Layout

Segment number: 59

| | | | | |
|---|---|---|---|---|
| **SG26** | - C | 9999999 | - | LIN-PIA-IMD-MEA-QTY-ALI-DTM-GIN-QVR-FTX-SG27-SG28-SG29-SG30-SG31-SG33-SG34-SG35-SG39-SG45-SG47 |
| **SG30** | - C | 10 | - | RFF-DTM |
| **DTM** | - C | 5 | - | Date/time/period |

Function:

To specify date, and/or time, or period.

| | | EDIFACT | GS1 | * | Description |
|---|---|---|---|---|---|
| C507 | DATE/TIME/PERIOD | M | **M** | | |
| 2005 | Date or time or period function code qualifier | M an..3 | **M** | * | 171 = Reference date/time |
| 2380 | Date or time or period value | C an..35 | **R** | | |
| 2379 | Date or time or period format code | C an..3 | **R** | | 102 = CCYYMMDD |

Segment Notes:

This segment is used to specify dates and times pertinent to the previous RFF segment.

Example:
DTM+171:20020802:102'

## 5. Segments Layout

Segment number: 60

| | | | | |
|---|---|---|---|---|
| **SG26** | - C | 9999999 | - | LIN-PIA-IMD-MEA-QTY-ALI-DTM-GIN-QVR-FTX-SG27-SG28-SG29-SG30-SG31-SG33-SG34-SG35-SG39-SG45-SG47 |
| **SG31** | - C | 10 | - | PAC-MEA-SG32 |
| **PAC** | - M | 1 | - | Package |

Function:

To describe the number and type of packages/physical units.

| | | EDIFACT | GS1 | * | Description |
|---|---|---|---|---|---|
| 7224 | Package quantity | C n..8 | **O** | | This data element can be used to specify the number of despatch units used to ship the ordered number of consumer units, in those cases where despatch unit coding has not yet been implemented. |
| C531 | PACKAGING DETAILS | C | **O** | | |
| 7075 | Packaging level code | C an..3 | **O** | | |
| 7233 | Packaging related description code | C an..3 | **O** | | |
| 7073 | Packaging terms and conditions code | C an..3 | **O** | | 1 = Packaging cost paid by supplier<br>2 = Packaging cost paid by recipient<br>3 = Packaging cost not charged (returnable) |
| C202 | PACKAGE TYPE | C | **O** | | |
| 7065 | Package type description code | C an..17 | **A** | | |
| 1131 | Code list identification code | C an..17 | **O** | | |
| 3055 | Code list responsible agency code | C an..3 | **D** | | |
| 7064 | Type of packages | C an..35 | **O** | | |
| C402 | PACKAGE TYPE IDENTIFICATION | C | **N** | | |
| 7077 | Description format code | M an..3 | | | |
| 7064 | Type of packages | M an..35 | | | |
| 7143 | Item type identification code | C an..3 | | | |
| 7064 | Type of packages | C an..35 | | | |
| 7143 | Item type identification code | C an..3 | | | |
| C532 | RETURNABLE PACKAGE DETAILS | C | **D** | | Composite C532 is only used where the packaging being described is returnable. This composite identifies who is responsible for payment of its return. |
| 8395 | Returnable package freight payment responsibility code | C an..3 | **O** | | 1 = Paid by customer<br>3 = Paid by supplier |
| 8393 | Returnable package load contents code | C an..3 | **N** | | |

Segment Notes:

This segment is used to specify the number and type of packages for the current line item.

Example:
PAC+++CR++3'

## 5. Segments Layout

Segment number: 61

| | | | | |
|---|---|---|---|---|
| **SG26** | - C | 9999999 | - | LIN-PIA-IMD-MEA-QTY-ALI-DTM-GIN-QVR-FTX-SG27-SG28-SG29-SG30-SG31-SG33-SG34-SG35-SG39-SG45-SG47 |
| **SG31** | - C | 10 | - | PAC-MEA-SG32 |
| **MEA** | - C | 10 | - | Measurements |

Function:

To specify physical measurements, including dimension tolerances, weights and counts.

| | | EDIFACT | GS1 | * | Description |
|---|---|---|---|---|---|
| 6311 | Measurement purpose code qualifier | M an..3 | **M** | | PD = Physical dimensions (product ordered)<br>SO = Storage limitation<br>TL = Transportation equipment limitations |
| C502 | MEASUREMENT DETAILS | C | **A** | | |
| 6313 | Measured attribute code | C an..3 | **A** | | AAA = Unit net weight<br>HT = Height dimension<br>LN = Length dimension<br>WD = Width dimension |
| 6321 | Measurement significance code | C an..3 | **O** | | 3 = Approximately<br>4 = Equal to |
| 6155 | Non-discrete measurement name code | C an..17 | **N** | | |
| 6154 | Non-discrete measurement name | C an..70 | **N** | | |
| C174 | VALUE/RANGE | C | **R** | | |
| 6411 | Measurement unit code | M an..3 | **M** | | |
| 6314 | Measurement value | C an..18 | **O** | | |
| 6162 | Range minimum value | C n..18 | **O** | | |
| 6152 | Range maximum value | C n..18 | **O** | | |
| 6432 | Significant digits quantity | C n..2 | **O** | | |
| 7383 | Surface or layer code | C an..3 | **N** | | |

Segment Notes:

This segment is used to specify any measurements related to the packaging defined in the previous PAC segment.

Example:
MEA+PD+AAA:4+KGM:400'
The net weight of the package is 400 kilograms.

## 5. Segments Layout

Segment number: 62

| | | | | |
|---|---|---|---|---|
| **SG26** | - C | 9999999 | - | LIN-PIA-IMD-MEA-QTY-ALI-DTM-GIN-QVR-FTX-SG27-SG28-SG29-SG30-SG31-SG33-SG34-SG35-SG39-SG45-SG47 |
| **SG31** | - C | 10 | - | PAC-MEA-SG32 |
| **SG32** | - C | 10 | - | PCI-GIN |
| **PCI** | - M | 1 | - | Package identification |

Function:

To specify markings and labels on individual packages or physical units.

| | | EDIFACT | GS1 | * | Description |
|---|---|---|---|---|---|
| 4233 | Marking instructions code | C an..3 | **R** | | 39 = Marked with Serial Shipping Container Code (SSCC) |
| C210 | MARKS & LABELS | C | **O** | | |
| 7102 | Shipping marks description | M an..35 | **M** | | |
| 7102 | Shipping marks description | C an..35 | **O** | | |
| 7102 | Shipping marks description | C an..35 | **O** | | |
| 7102 | Shipping marks description | C an..35 | **O** | | |
| 7102 | Shipping marks description | C an..35 | **O** | | |
| 7102 | Shipping marks description | C an..35 | **O** | | |
| 7102 | Shipping marks description | C an..35 | **O** | | |
| 7102 | Shipping marks description | C an..35 | **O** | | |
| 7102 | Shipping marks description | C an..35 | **O** | | |
| 7102 | Shipping marks description | C an..35 | **O** | | |
| 8275 | Container or package contents indicator code | C an..3 | **N** | | |
| C827 | TYPE OF MARKING | C | **N** | | |
| 7511 | Marking type code | M an..3 | | | |
| 1131 | Code list identification code | C an..17 | | | |
| 3055 | Code list responsible agency code | C an..3 | | | |

Segment Notes:

This segment is used to identify markings on the packaging of the product being invoiced.

Example:
PCI+39'

## 5. Segments Layout

Segment number: 63

| | | | | |
|---|---|---|---|---|
| **SG26** | - C | 9999999 | - | LIN-PIA-IMD-MEA-QTY-ALI-DTM-GIN-QVR-FTX-SG27-SG28-SG29-SG30-SG31-SG33-SG34-SG35-SG39-SG45-SG47 |
| **SG31** | - C | 10 | - | PAC-MEA-SG32 |
| **SG32** | - C | 10 | - | PCI-GIN |
| **GIN** | - C | 10 | - | Goods identity number |

Function:

To give specific identification numbers, either as single numbers or ranges.

| | | EDIFACT | GS1 | * | Description |
|---|---|---|---|---|---|
| 7405 | Object identification code qualifier | M an..3 | **M** | * | AW = Serial shipping container code<br>BJ = Serial shipping container code |
| C208 | IDENTITY NUMBER RANGE | M | **M** | | |
| 7402 | Object identifier | M an..35 | **M** | | |
| 7402 | Object identifier | C an..35 | **O** | | |
| C208 | IDENTITY NUMBER RANGE | C | **O** | | |
| 7402 | Object identifier | M an..35 | **M** | | |
| 7402 | Object identifier | C an..35 | **O** | | |
| C208 | IDENTITY NUMBER RANGE | C | **O** | | |
| 7402 | Object identifier | M an..35 | **M** | | |
| 7402 | Object identifier | C an..35 | **O** | | |
| C208 | IDENTITY NUMBER RANGE | C | **O** | | |
| 7402 | Object identifier | M an..35 | **M** | | |
| 7402 | Object identifier | C an..35 | **O** | | |
| C208 | IDENTITY NUMBER RANGE | C | **O** | | |
| 7402 | Object identifier | M an..35 | **M** | | |
| 7402 | Object identifier | C an..35 | **O** | | |

Segment Notes:

This segment is used to provide the serial shipping container code (SSCC) marked on the packaging of the products being invoiced.

Example:
GIN+BJ+354123450000000014'

## 5. Segments Layout

Segment number: 64

| | | | | |
|---|---|---|---|---|
| **SG26** | - C | 9999999 | - | LIN-PIA-IMD-MEA-QTY-ALI-DTM-GIN-QVR-FTX-SG27-SG28-SG29-SG30-SG31-SG33-SG34-SG35-SG39-SG45-SG47 |
| **SG33** | - C | 9999 | - | LOC-QTY-DTM |
| **LOC** | - M | 1 | - | Place/location identification |

Function:

To identify a place or a location and/or related locations.

| | | EDIFACT | GS1 | * | Description |
|---|---|---|---|---|---|
| 3227 | Location function code qualifier | M an..3 | **M** | | 7 = Place of delivery |
| C517 | LOCATION IDENTIFICATION | C | **A** | | |
| 3225 | Location name code | C an..25 | **A** | | GLN - Format n13 |
| 1131 | Code list identification code | C an..17 | **O** | | |
| 3055 | Code list responsible agency code | C an..3 | **D** | | 9 = GS1<br>DE 3055 must be used if DE 3225 is used and does not contain an UN/LOCODE. |
| 3224 | Location name | C an..256 | **O** | | |
| C519 | RELATED LOCATION ONE IDENTIFICATION | C | **O** | | |
| 3223 | First related location name code | C an..25 | **O** | | Global Location Number GLN - Format n13 |
| 1131 | Code list identification code | C an..17 | **O** | | |
| 3055 | Code list responsible agency code | C an..3 | **D** | | DE 3055 must be used if DE 3223 is used and does not contain an UN/LOCODE.<br>9 = GS1 |
| 3222 | First related location name | C an..70 | **O** | | |
| C553 | RELATED LOCATION TWO IDENTIFICATION | C | **N** | | |
| 3233 | Second related location name code | C an..25 | | | |
| 1131 | Code list identification code | C an..17 | | | |
| 3055 | Code list responsible agency code | C an..3 | | | |
| 3232 | Second related location name | C an..70 | | | |
| 5479 | Relation code | C an..3 | **N** | | |

Segment Notes:

This segment is used to identify multiple delivery locations for the current line item.

Example:
LOC+7+4012345500004::9'

## 5. Segments Layout

Segment number: 65

| | | | | |
|---|---|---|---|---|
| **SG26** | - C | 9999999 | - | LIN-PIA-IMD-MEA-QTY-ALI-DTM-GIN-QVR-FTX-SG27-SG28-SG29-SG30-SG31-SG33-SG34-SG35-SG39-SG45-SG47 |
| **SG33** | - C | 9999 | - | LOC-QTY-DTM |
| **QTY** | - C | 100 | - | Quantity |

Function:

To specify a pertinent quantity.

| | | EDIFACT | GS1 | * | Description |
|---|---|---|---|---|---|
| C186 | QUANTITY DETAILS | M | **M** | | |
| 6063 | Quantity type code qualifier | M an..3 | **M** | | 47 = Invoiced quantity<br>131 = Delivery quantity<br>192 = Free goods quantity |
| 6060 | Quantity | M an..35 | **M** | | |
| 6411 | Measurement unit code | C an..3 | **D** | | This DE is only used if the product being invoiced is of variable quantity. |

Segment Notes:

This segment is used to specify the quantities related to the location identified in the preceding LOC segment. The total of all QTY segments in SG33 should equal the value in the QTY at line level.

Example:
QTY+131:12'

## 5. Segments Layout

Segment number: 66

| | | | | |
|---|---|---|---|---|
| **SG26** | - C | 9999999 | - | LIN-PIA-IMD-MEA-QTY-ALI-DTM-GIN-QVR-FTX-SG27-SG28-SG29-SG30-SG31-SG33-SG34-SG35-SG39-SG45-SG47 |
| **SG33** | - C | 9999 | - | LOC-QTY-DTM |
| **DTM** | - C | 5 | - | Date/time/period |

Function:

To specify date, and/or time, or period.

| | | EDIFACT | GS1 | * | Description |
|---|---|---|---|---|---|
| C507 | DATE/TIME/PERIOD | M | **M** | | |
| 2005 | Date or time or period function code qualifier | M an..3 | **M** | * | 35 = Delivery date/time, actual |
| 2380 | Date or time or period value | C an..35 | **R** | | |
| 2379 | Date or time or period format code | C an..3 | **R** | | 102 = CCYYMMDD<br>203 = CCYYMMDDHHMM<br>718 = CCYYMMDD-CCYYMMDD |

Segment Notes:

This segment is used to specify the date/time on which the delivery took (will take) place to the location identified in preceeding LOC segment.

Example:
DTM+35:20020602:102'

## 5. Segments Layout

Segment number: 67

| | | | | |
|---|---|---|---|---|
| **SG26** | - C | 9999999 | - | LIN-PIA-IMD-MEA-QTY-ALI-DTM-GIN-QVR-FTX-SG27-SG28-SG29-SG30-SG31-SG33-SG34-SG35-SG39-SG45-SG47 |
| **SG34** | - C | 99 | - | TAX-MOA |
| **TAX** | - M | 1 | - | Duty/tax/fee details |

Function:

To specify relevant duty/tax/fee information.

| | | EDIFACT | GS1 | * | Description |
|---|---|---|---|---|---|
| 5283 | Duty or tax or fee function code qualifier | M an..3 | **M** | | 5 = Customs duty<br>7 = Tax |
| C241 | DUTY/TAX/FEE TYPE | C | **D** | | |
| 5153 | Duty or tax or fee type name code | C an..3 | **O** | | GST = Goods and services tax<br>VAT = Value added tax |
| 1131 | Code list identification code | C an..17 | **O** | | |
| 3055 | Code list responsible agency code | C an..3 | **D** | | |
| 5152 | Duty or tax or fee type name | C an..35 | **O** | | |
| C533 | DUTY/TAX/FEE ACCOUNT DETAIL | C | **O** | | |
| 5289 | Duty or tax or fee account code | M an..6 | **M** | | |
| 1131 | Code list identification code | C an..17 | **O** | | |
| 3055 | Code list responsible agency code | C an..3 | **D** | | |
| 5286 | Duty or tax or fee assessment basis value | C an..15 | **O** | | |
| C243 | DUTY/TAX/FEE DETAIL | C | **A** | | |
| 5279 | Duty or tax or fee rate code | C an..7 | **O** | | |
| 1131 | Code list identification code | C an..17 | **O** | | |
| 3055 | Code list responsible agency code | C an..3 | **D** | | |
| 5278 | Duty or tax or fee rate | C an..17 | **R** | | The actual rate of tax/duty. |
| 5273 | Duty or tax or fee rate basis code | C an..12 | **O** | | 2 = Weight<br>3 = Quantity |
| 1131 | Code list identification code | C an..17 | **O** | | |
| 3055 | Code list responsible agency code | C an..3 | **D** | | |
| 5305 | Duty or tax or fee category code | C an..3 | **D** | | A = Mixed tax rate<br>E = Exempt from tax<br>S = Standard rate |
| 3446 | Party tax identifier | C an..20 | **O** | | |
| 1227 | Calculation sequence code | C an..3 | **N** | | |

Segment Notes:

This segment is used to specify tax details for the line item being invoiced.

Example:
TAX+7+VAT+++:::21+S'

## 5. Segments Layout

Segment number: 67

Dependency Notes:
DE C241 and 5305: Tax types and categories will differ from country to country. They are to be defined by national guidelines.

## 5. Segments Layout

Segment number: 68

| | | | | |
|---|---|---|---|---|
| **SG26** | - C | 9999999 | - | LIN-PIA-IMD-MEA-QTY-ALI-DTM-GIN-QVR-FTX-SG27-SG28-SG29-SG30-SG31-SG33-SG34-SG35-SG39-SG45-SG47 |
| **SG34** | - C | 99 | - | TAX-MOA |
| **MOA** | - C | 2 | - | Monetary amount |

Function:

To specify a monetary amount.

| | | EDIFACT | GS1 | * | Description |
|---|---|---|---|---|---|
| C516 | MONETARY AMOUNT | M | **M** | | |
| 5025 | Monetary amount type code qualifier | M an..3 | **M** | | 124 = Tax amount<br>125 = Taxable amount |
| 5004 | Monetary amount | C n..35 | **R** | | |
| 6345 | Currency identification code | C an..3 | **N** | | |
| 6343 | Currency type code qualifier | C an..3 | **N** | | |
| 4405 | Status description code | C an..3 | **N** | | |

Segment Notes:

This segment is used to specify in monetary terms the amount of tax due on the current line item.

Example:
MOA+124:121.80'
21% (expressed in TAX segment) of 580 (expressed in MOA (SG27) segment) = 121.80.

## 5. Segments Layout

Segment number: 69

| | | | | |
|---|---|---|---|---|
| **SG26** | - C | 9999999 | - | LIN-PIA-IMD-MEA-QTY-ALI-DTM-GIN-QVR-FTX-SG27-SG28-SG29-SG30-SG31-SG33-SG34-SG35-SG39-SG45-SG47 |
| **SG35** | - C | 99 | - | NAD-SG36 |
| **NAD** | - M | 1 | - | Name and address |

Function:

To specify the name/address and their related function, either by C082 only and/or unstructured by C058 or structured by C080 thru 3207.

| | | EDIFACT | GS1 | * | Description |
|---|---|---|---|---|---|
| 3035 | Party function code qualifier | M an..3 | **M** | | BY = Buyer<br>DP = Delivery party<br>II = Issuer of invoice<br>IV = Invoicee<br>PE = Payee<br>RB = Receiving financial institution<br>SR = Supplier's agent/representative<br>SU = Supplier |
| C082 | PARTY IDENTIFICATION DETAILS | C | **A** | | |
| 3039 | Party identifier | M an..35 | **M** | | GLN - Format n13 |
| 1131 | Code list identification code | C an..17 | **O** | | |
| 3055 | Code list responsible agency code | C an..3 | **R** | * | 9 = GS1 |
| C058 | NAME AND ADDRESS | C | **O** | | This composite may only be used to fulfill the requirements of directive 2003/58/EC, article 4. |
| 3124 | Name and address description | M an..35 | **M** | | |
| 3124 | Name and address description | C an..35 | **O** | | |
| 3124 | Name and address description | C an..35 | **O** | | |
| 3124 | Name and address description | C an..35 | **O** | | |
| 3124 | Name and address description | C an..35 | **O** | | |
| C080 | PARTY NAME | C | **D** | | |
| 3036 | Party name | M an..35 | **M** | | Party Name in clear text. |
| 3036 | Party name | C an..35 | **O** | | |
| 3036 | Party name | C an..35 | **O** | | |
| 3036 | Party name | C an..35 | **O** | | |
| 3036 | Party name | C an..35 | **O** | | |
| 3045 | Party name format code | C an..3 | **O** | | |
| C059 | STREET | C | **D** | | |
| 3042 | Street and number or post office box identifier | M an..35 | **M** | | Building Name/Number and Street |
| 3042 | Street and number or post office box identifier | C an..35 | **O** | | Name and/or P.O. Box |
| 3042 | Street and number or post office box identifier | C an..35 | **O** | | |
| 3042 | Street and number or post office box identifier | C an..35 | **O** | | |
| 3164 | City name | C an..35 | **D** | | City/Town, clear text. |

## 5. Segments Layout

Segment number: 69

| | | EDIFACT | GS1 | * | Description |
|---|---|---|---|---|---|
| C819 | COUNTRY SUB-ENTITY DETAILS | C | **D** | | |
| 3229 | Country sub-entity name code | C an..9 | **O** | | |
| 1131 | Code list identification code | C an..17 | **O** | | |
| 3055 | Code list responsible agency code | C an..3 | **O** | | |
| 3228 | Country sub-entity name | C an..70 | **O** | | County/State, clear text. |
| 3251 | Postal identification code | C an..17 | **D** | | Postal Code |
| 3207 | Country name code | C an..3 | **D** | | ISO 3166 two alpha code |

Segment Notes:

This segment is used to identify parties which are valid only for the current line item. Parties identified here override those specified in the NAD segment at heading level when the same qualifier is used.

Example:
NAD+DP+5412345000013::9'

Dependency Notes:
The following composites and data elements are only used when a coded name and address can not be used.
The affected composites and data elements are as follows:
C080 - C059 - 3164 - C819 - 3251 - 3207

## 5. Segments Layout

Segment number: 70

| | | | | |
|---|---|---|---|---|
| **SG26** | - C | 9999999 | - | LIN-PIA-IMD-MEA-QTY-ALI-DTM-GIN-QVR-FTX-SG27-SG28-SG29-SG30-SG31-SG33-SG34-SG35-SG39-SG45-SG47 |
| **SG35** | - C | 99 | - | NAD-SG36 |
| **SG36** | - C | 5 | - | RFF |
| **RFF** | - M | 1 | - | Reference |

Function:

To specify a reference.

| | | EDIFACT | GS1 | * | Description |
|---|---|---|---|---|---|
| C506 | REFERENCE | M | **M** | | |
| 1153 | Reference code qualifier | M an..3 | **M** | * | AQQ = Activite Principale Exercee (APE) identifier<br>GN = Government reference number<br>VA = VAT registration number<br>XA = Company/place registration number<br>YC1 = Additional party identification (GS1 Temporary Code) |
| 1154 | Reference identifier | C an..70 | **R** | | |
| 1156 | Document line identifier | C an..6 | **N** | | |
| 4000 | Reference version identifier | C an..35 | **N** | | |
| 1060 | Revision identifier | C an..6 | **N** | | |

Segment Notes:

This segment is used to specify references related to the party identified in the NAD at line level.

Example:
RFF+VA:VR85231142'

## 5. Segments Layout

Segment number: 71

| | | | |
|---|---|---|---|
| **SG26** | - C | 9999999 - | LIN-PIA-IMD-MEA-QTY-ALI-DTM-GIN-QVR-FTX-SG27-SG28-SG29-SG30-SG31-SG33-SG34-SG35-SG39-SG45-SG47 |
| **SG39** | - C | 30 - | ALC-ALI-DTM-SG40-SG41-SG42-SG43-SG44 |
| **ALC** | - M | 1 - | Allowance or charge |

Function:

To identify allowance or charge details.

| | | EDIFACT | GS1 | * | Description |
|---|---|---|---|---|---|
| 5463 | Allowance or charge code qualifier | M an..3 | **M** | | A = Allowance<br>C = Charge |
| C552 | ALLOWANCE/CHARGE INFORMATION | C | **O** | | |
| 1230 | Allowance or charge identifier | C an..35 | **D** | | If code '69' is used in DE 5189, the agreement number must be specified in DE 1230. |
| 5189 | Allowance or charge identification code | C an..3 | **O** | | 64E = Yearly turnover allowance/charge (GS1 Temporary Code)<br>69 = Charge for a customer specific finish<br>101 = Carbon footprint charge |
| 4471 | Settlement means code | C an..3 | **O** | | 2 = Off invoice<br>5 = Charge to be paid by vendor<br>6 = Charge to be paid by customer |
| 1227 | Calculation sequence code | C an..3 | **D** | | 1 = First step of calculation<br>2 = Second step of calculation<br>etc, etc, etc,<br>9 = Ninth step of calculation<br>The calculation sequence indicator is used when multiple allowances and/or charges are applicable. If various allowances and/or charges percentages, quantities, monetary amounts, or, rates are applicable to the same base price, then the calculation sequence indicator will always equal one. If the various allowances and/or charges are applied against a fluctuating price (constantly changing because of the application of other allowances and/or charges) then the sequence of calculation is indicated using this data element.<br>If the allowance or charge is not to be applied against a fixed price then the calculation sequence indicator must be included. |
| C214 | SPECIAL SERVICES IDENTIFICATION | C | **D** | | This composite is only included if the buyer knows the type of allowance or charge and is agreed between trading partners in their interchange agreement. |
| 7161 | Special service description code | C an..3 | **R** | | AEK = Cash on delivery service<br>ADS = Full pallet ordering<br>ADT = Pick-up<br>AJ = Adjustments<br>CAC = Cash discount<br>CAV = Battery collection and recycling<br>FC = Freight charge<br>QD = Quantity discount<br>X40 = Allowance/charge regulated by law (GS1 Temporary Code)<br>In case of an environmental fee which is a tax then this should be expressed in DE 5153 of the TAX segment. |

## 5. Segments Layout

Segment number: 71

| | | EDIFACT | GS1 | * | Description |
|---|---|---|---|---|---|
| 1131 | Code list identification code | C an..17 | **O** | | |
| 3055 | Code list responsible agency code | C an..3 | **D** | | 9 = GS1<br>Code value 9 is used when GS1 codes are used in DE 7161. |
| 7160 | Special service description | C an..35 | **O** | | |
| 7160 | Special service description | C an..35 | **O** | | |

Segment Notes:

This segment is used to specify any allowances or charges which apply only to the line item being invoiced.

Example:
ALC+A+++1'

## 5. Segments Layout

Segment number: 72

| | | | | |
|---|---|---|---|---|
| **SG26** | - C | 9999999 | - | LIN-PIA-IMD-MEA-QTY-ALI-DTM-GIN-QVR-FTX-SG27-SG28-SG29-SG30-SG31-SG33-SG34-SG35-SG39-SG45-SG47 |
| **SG39** | - C | 30 | - | ALC-ALI-DTM-SG40-SG41-SG42-SG43-SG44 |
| **ALI** | - C | 5 | - | Additional information |

Function:

To indicate that special conditions due to the origin, customs preference, fiscal or commercial factors are applicable.

| | | EDIFACT | GS1 | * | Description |
|---|---|---|---|---|---|
| 3239 | Country of origin name code | C an..3 | **O** | | Use ISO 3165 code |
| 9213 | Duty regime type code | C an..3 | **O** | | |
| 4183 | Special condition code | C an..3 | **O** | | 6 = Subject to bonus<br>15 = Not subject to discount<br>116 = Subject to postponed discount |
| 4183 | Special condition code | C an..3 | **O** | | |
| 4183 | Special condition code | C an..3 | **O** | | |
| 4183 | Special condition code | C an..3 | **O** | | |
| 4183 | Special condition code | C an..3 | **O** | | |

Segment Notes:

This segment is used to indicate any special conditions applicable to the allowances or charges detailed at line level.

Example:
ALI+++6'

## 5. Segments Layout

Segment number: 73

| | | | | |
|---|---|---|---|---|
| **SG26** | - C | 9999999 | - | LIN-PIA-IMD-MEA-QTY-ALI-DTM-GIN-QVR-FTX-SG27-SG28-SG29-SG30-SG31-SG33-SG34-SG35-SG39-SG45-SG47 |
| **SG39** | - C | 30 | - | ALC-ALI-DTM-SG40-SG41-SG42-SG43-SG44 |
| **DTM** | - C | 5 | - | Date/time/period |

Function:

To specify date, and/or time, or period.

| | | EDIFACT | GS1 | * | Description |
|---|---|---|---|---|---|
| C507 | DATE/TIME/PERIOD | M | **M** | | |
| 2005 | Date or time or period function code qualifier | M an..3 | **M** | * | 140 = Payment due date<br>531 = Payment period |
| 2380 | Date or time or period value | C an..35 | **R** | | |
| 2379 | Date or time or period format code | C an..3 | **R** | | 102 = CCYYMMDD<br>203 = CCYYMMDDHHMM<br>718 = CCYYMMDD-CCYYMMDD |

Segment Notes:

This segment is used to provide any dates or periods related to the allowances or charges of the current line item.

Example:
DTM+140:20020930:102'

## 5. Segments Layout

Segment number: 74

| | | | | |
|---|---|---|---|---|
| **SG26** | - C | 9999999 | - | LIN-PIA-IMD-MEA-QTY-ALI-DTM-GIN-QVR-FTX-SG27-SG28-SG29-SG30-SG31-SG33-SG34-SG35-SG39-SG45-SG47 |
| **SG39** | - C | 30 | - | ALC-ALI-DTM-SG40-SG41-SG42-SG43-SG44 |
| **SG40** | - C | 1 | - | QTY |
| **QTY** | - M | 1 | - | Quantity |

Function:

To specify a pertinent quantity.

| | | EDIFACT | GS1 | * | Description |
|---|---|---|---|---|---|
| C186 | QUANTITY DETAILS | M | **M** | | |
| 6063 | Quantity type code qualifier | M an..3 | **M** | | 1 = Discrete quantity |
| 6060 | Quantity | M an..35 | **M** | | |
| 6411 | Measurement unit code | C an..3 | **D** | | This DE is only used if the product being invoiced is of variable quantity. |

Segment Notes:

The segment is used to specify quantity discounts or charges for the line being invoiced.

Example:
QTY+1:12'

## 5. Segments Layout

Segment number: 75

| | | | | |
|---|---|---|---|---|
| **SG26** | - C | 9999999 | - | LIN-PIA-IMD-MEA-QTY-ALI-DTM-GIN-QVR-FTX-SG27-SG28-SG29-SG30-SG31-SG33-SG34-SG35-SG39-SG45-SG47 |
| **SG39** | - C | 30 | - | ALC-ALI-DTM-SG40-SG41-SG42-SG43-SG44 |
| **SG41** | - C | 1 | - | PCD |
| **PCD** | - M | 1 | - | Percentage details |

Function:

To specify percentage information.

| | | EDIFACT | GS1 | * | Description |
|---|---|---|---|---|---|
| C501 | PERCENTAGE DETAILS | M | **M** | | |
| 5245 | Percentage type code qualifier | M an..3 | **M** | | 1 = Allowance<br>2 = Charge |
| 5482 | Percentage | C n..10 | **R** | | |
| 5249 | Percentage basis identification code | C an..3 | **O** | | |
| 1131 | Code list identification code | C an..17 | **O** | | |
| 3055 | Code list responsible agency code | C an..3 | **D** | | |
| 4405 | Status description code | C an..3 | **N** | | |

Segment Notes:

This segment is used to specify percentage discounts or charges for the line item being invoiced.

Example:
PCD+1:0.75'

## 5. Segments Layout

Segment number: 76

| | | | | |
|---|---|---|---|---|
| **SG26** | - C | 9999999 | - | LIN-PIA-IMD-MEA-QTY-ALI-DTM-GIN-QVR-FTX-SG27-SG28-SG29-SG30-SG31-SG33-SG34-SG35-SG39-SG45-SG47 |
| **SG39** | - C | 30 | - | ALC-ALI-DTM-SG40-SG41-SG42-SG43-SG44 |
| **SG42** | - C | 2 | - | MOA |
| **MOA** | - M | 1 | - | Monetary amount |

Function:

To specify a monetary amount.

| | | EDIFACT | GS1 | * | Description |
|---|---|---|---|---|---|
| C516 | MONETARY AMOUNT | M | **M** | | |
| 5025 | Monetary amount type code qualifier | M an..3 | **M** | | 23 = Charge amount<br>25 = Charge/allowance basis<br>204 = Allowance amount |
| 5004 | Monetary amount | C n..35 | **R** | | |
| 6345 | Currency identification code | C an..3 | **N** | | |
| 6343 | Currency type code qualifier | C an..3 | **N** | | |
| 4405 | Status description code | C an..3 | **N** | | |

Segment Notes:

This segment is used to specify monetary allowances/charges for the line item being invoiced.

Example:
MOA+204:12.20'

## 5. Segments Layout

Segment number: 77

| | | | | |
|---|---|---|---|---|
| **SG26** | - C | 9999999 | - | LIN-PIA-IMD-MEA-QTY-ALI-DTM-GIN-QVR-FTX-SG27-SG28-SG29-SG30-SG31-SG33-SG34-SG35-SG39-SG45-SG47 |
| **SG39** | - C | 30 | - | ALC-ALI-DTM-SG40-SG41-SG42-SG43-SG44 |
| **SG43** | - C | 1 | - | RTE |
| **RTE** | - M | 1 | - | Rate details |

Function:

To specify rate information.

| | | EDIFACT | GS1 | * | Description |
|---|---|---|---|---|---|
| C128 | RATE DETAILS | M | **M** | | |
| 5419 | Rate type code qualifier | M an..3 | **M** | | 1 = Allowance rate<br>2 = Charge rate |
| 5420 | Unit price basis rate | M n..15 | **M** | | |
| 5284 | Unit price basis value | C n..9 | **O** | | |
| 6411 | Measurement unit code | C an..3 | **O** | | |
| 4405 | Status description code | C an..3 | **N** | | |

Segment Notes:

This segment is used to specify allowance or charge rates for the line item being invoiced.

Example:
RTE+1:1.25'

## 5. Segments Layout

Segment number: 78

| | | | | |
|---|---|---|---|---|
| **SG26** | - C | 9999999 | - | LIN-PIA-IMD-MEA-QTY-ALI-DTM-GIN-QVR-FTX-SG27-SG28-SG29-SG30-SG31-SG33-SG34-SG35-SG39-SG45-SG47 |
| **SG39** | - C | 30 | - | ALC-ALI-DTM-SG40-SG41-SG42-SG43-SG44 |
| **SG44** | - C | 5 | - | TAX-MOA |
| **TAX** | - M | 1 | - | Duty/tax/fee details |

Function:

To specify relevant duty/tax/fee information.

| | | EDIFACT | GS1 | * | Description |
|---|---|---|---|---|---|
| 5283 | Duty or tax or fee function code qualifier | M an..3 | **M** | | 5 = Customs duty<br>7 = Tax |
| C241 | DUTY/TAX/FEE TYPE | C | **D** | | |
| 5153 | Duty or tax or fee type name code | C an..3 | **O** | | GST = Goods and services tax<br>VAT = Value added tax |
| 1131 | Code list identification code | C an..17 | **O** | | |
| 3055 | Code list responsible agency code | C an..3 | **D** | | |
| 5152 | Duty or tax or fee type name | C an..35 | **O** | | |
| C533 | DUTY/TAX/FEE ACCOUNT DETAIL | C | **O** | | |
| 5289 | Duty or tax or fee account code | M an..6 | **M** | | |
| 1131 | Code list identification code | C an..17 | **O** | | |
| 3055 | Code list responsible agency code | C an..3 | **D** | | |
| 5286 | Duty or tax or fee assessment basis value | C an..15 | **O** | | |
| C243 | DUTY/TAX/FEE DETAIL | C | **A** | | |
| 5279 | Duty or tax or fee rate code | C an..7 | **O** | | |
| 1131 | Code list identification code | C an..17 | **O** | | |
| 3055 | Code list responsible agency code | C an..3 | **D** | | |
| 5278 | Duty or tax or fee rate | C an..17 | **R** | | The actual rate of tax/duty. |
| 5273 | Duty or tax or fee rate basis code | C an..12 | **O** | | |
| 1131 | Code list identification code | C an..17 | **O** | | |
| 3055 | Code list responsible agency code | C an..3 | **D** | | |
| 5305 | Duty or tax or fee category code | C an..3 | **D** | | A = Mixed tax rate<br>E = Exempt from tax<br>S = Standard rate |
| 3446 | Party tax identifier | C an..20 | **O** | | |
| 1227 | Calculation sequence code | C an..3 | **N** | | |

Segment Notes:

This segment is used to identify any taxes or duties which apply to the allowances or charges at LIN level.

Example:

## 5. Segments Layout

Segment number: 78

TAX+7+VAT+++:::21+S'

Dependency Notes:
DE C241 and 5305: Tax types and categories will differ from country to country. They are to be defined by national guidelines.

## 5. Segments Layout

Segment number: 79

| | | | | |
|---|---|---|---|---|
| **SG26** | - C | 9999999 | - | LIN-PIA-IMD-MEA-QTY-ALI-DTM-GIN-QVR-FTX-SG27-SG28-SG29-SG30-SG31-SG33-SG34-SG35-SG39-SG45-SG47 |
| **SG39** | - C | 30 | - | ALC-ALI-DTM-SG40-SG41-SG42-SG43-SG44 |
| **SG44** | - C | 5 | - | TAX-MOA |
| **MOA** | - C | 2 | - | Monetary amount |

Function:

To specify a monetary amount.

| | | EDIFACT | GS1 | * | Description |
|---|---|---|---|---|---|
| C516 | MONETARY AMOUNT | M | **M** | | |
| 5025 | Monetary amount type code qualifier | M an..3 | **M** | | 124 = Tax amount<br>125 = Taxable amount |
| 5004 | Monetary amount | C n..35 | **R** | | |
| 6345 | Currency identification code | C an..3 | **N** | | |
| 6343 | Currency type code qualifier | C an..3 | **N** | | |
| 4405 | Status description code | C an..3 | **N** | | |

Segment Notes:

This segment is used to specify in monetary terms the amount of tax due for the allowances and charges for the current line item.

Example:
MOA+124:21.80'

## 5. Segments Layout

Segment number: 80

| | | | |
|---|---|---|---|
| **SG26** | - C | 9999999 - | LIN-PIA-IMD-MEA-QTY-ALI-DTM-GIN-QVR-FTX-SG27-SG28-SG29-SG30-SG31-SG33-SG34-SG35-SG39-SG45-SG47 |
| **SG45** | - C | 10 - | TDT |
| **TDT** | - M | 1 - | Details of transport |

Function:

To specify the transport details such as mode of transport, means of transport, its conveyance reference number and the identification of the means of transport.
The segment may be pointed to by the TPL segment.

| | | EDIFACT | GS1 | * | Description |
|---|---|---|---|---|---|
| 8051 | Transport stage code qualifier | M an..3 | **M** | | 20 = Main-carriage transport |
| 8028 | Means of transport journey identifier | C an..17 | **O** | | Reference number covering the transport |
| C220 | MODE OF TRANSPORT | C | **A** | | |
| 8067 | Transport mode name code | C an..3 | **R** | | |
| 8066 | Transport mode name | C an..17 | **N** | | |
| C228 | TRANSPORT MEANS | C | **O** | | DE 8179 and 8178 are only used when the type of transport must be specifically identified, i.e. where a generic description such as road transport is unsuitable. |
| 8179 | Transport means description code | C an..8 | **D** | | 23 = Rail bulk car<br>31 = Truck |
| 8178 | Transport means description | C an..17 | **D** | | |
| C040 | CARRIER | C | **O** | | |
| 3127 | Carrier identifier | C an..17 | **A** | | Global Location Number GLN - Format n13 |
| 1131 | Code list identification code | C an..17 | **O** | | |
| 3055 | Code list responsible agency code | C an..3 | **D** | | 9 = GS1<br>DE 3055 must be used if DE 3127 is used. |
| 3128 | Carrier name | C an..35 | **O** | | |
| 8101 | Transit direction indicator code | C an..3 | **O** | | BS = Buyer to supplier<br>SB = Supplier to buyer |
| C401 | EXCESS TRANSPORTATION INFORMATION | C | **N** | | |
| 8457 | Excess transportation reason code | M an..3 | | | |
| 8459 | Excess transportation responsibility code | M an..3 | | | |
| 7130 | Customer shipment authorisation identifier | C an..17 | | | |
| C222 | TRANSPORT IDENTIFICATION | C | **O** | | |
| 8213 | Transport means identification name identifier | C an..9 | **O** | | |
| 1131 | Code list identification code | C an..17 | **O** | | |
| 3055 | Code list responsible agency code | C an..3 | **D** | | DE 3055 must be used if DE 8213 is used. |
| 8212 | Transport means identification name | C an..35 | **R** | | Vehicle license plate/Aircraft Number |

## 5. Segments Layout

Segment number: 80

| | | EDIFACT | GS1 | * | Description |
|---|---|---|---|---|---|
| 8453 | Transport means nationality code | C an..3 | **O** | | ISO 3166 two alpha code |
| 8281 | Transport means ownership indicator code | C an..3 | **N** | | |

Segment Notes:

This segment is used to specify the transport means used for the product being invoiced. This segment is only used if the transport means differ from those specified in the message header.

Example:
TDT+20++30+31'

## 5. Segments Layout

Segment number: 81

| | | | | |
|---|---|---|---|---|
| **SG26** | - C | 9999999 | - | LIN-PIA-IMD-MEA-QTY-ALI-DTM-GIN-QVR-FTX-SG27-SG28-SG29-SG30-SG31-SG33-SG34-SG35-SG39-SG45-SG47 |
| **SG47** | - C | 5 | - | TOD-LOC |
| **TOD** | - M | 1 | - | Terms of delivery or transport |

Function:

To specify terms of delivery or transport.

| | | EDIFACT | GS1 | * | Description |
|---|---|---|---|---|---|
| 4055 | Delivery or transport terms function code | C an..3 | **R** | | 3 = Price and despatch condition<br>6 = Delivery condition |
| 4215 | Transport charges payment method code | C an..3 | **O** | | DF = Defined by buyer and supplier<br>PC = Prepaid but charged to customer |
| C100 | TERMS OF DELIVERY OR TRANSPORT | C | **A** | | |
| 4053 | Delivery or transport terms description code | C an..3 | **R** | | INCOTERMS (See EANCOM Codes Set)<br>If INCOTERMS are applicable, then DE 3055 has to contain code value "9" and DE 1131 must be used. |
| 1131 | Code list identification code | C an..17 | **D** | | |
| 3055 | Code list responsible agency code | C an..3 | **D** | | |
| 4052 | Delivery or transport terms description | C an..70 | **O** | | |
| 4052 | Delivery or transport terms description | C an..70 | **O** | | |

Segment Notes:

This segment is used to specify the terms of delivery for the current line item.

Example:
TOD+3++CIF:2E:9'

Dependency Notes:
Data elements 1131 and 3055 are only used if specific terms of delivery codes, which are outside those recommended by EDIFACT, are being used.

## 5. Segments Layout

Segment number: 82

| | | | |
|---|---|---|---|
| **SG26** | - C | 9999999 - | LIN-PIA-IMD-MEA-QTY-ALI-DTM-GIN-QVR-FTX-SG27-SG28-SG29-SG30-SG31-SG33-SG34-SG35-SG39-SG45-SG47 |
| **SG47** | - C | 5 - | TOD-LOC |
| **LOC** | - C | 2 - | Place/location identification |

Function:

To identify a place or a location and/or related locations.

| | | EDIFACT | GS1 | * | Description |
|---|---|---|---|---|---|
| 3227 | Location function code qualifier | M an..3 | **M** | | 1 = Place of terms of delivery<br>5 = Place of departure<br>7 = Place of delivery |
| C517 | LOCATION IDENTIFICATION | C | **A** | | |
| 3225 | Location name code | C an..25 | **A** | | UN/LOCODE |
| 1131 | Code list identification code | C an..17 | **O** | | |
| 3055 | Code list responsible agency code | C an..3 | **D** | | 3 = IATA (International Air Transport Association)<br>DE 3055 must be used if DE 3225 is used and does not contain an UN/LOCODE. |
| 3224 | Location name | C an..256 | **O** | | |
| C519 | RELATED LOCATION ONE IDENTIFICATION | C | **N** | | |
| 3223 | First related location name code | C an..25 | | | |
| 1131 | Code list identification code | C an..17 | | | |
| 3055 | Code list responsible agency code | C an..3 | | | |
| 3222 | First related location name | C an..70 | | | |
| C553 | RELATED LOCATION TWO IDENTIFICATION | C | **N** | | |
| 3233 | Second related location name code | C an..25 | | | |
| 1131 | Code list identification code | C an..17 | | | |
| 3055 | Code list responsible agency code | C an..3 | | | |
| 3232 | Second related location name | C an..70 | | | |
| 5479 | Relation code | C an..3 | **N** | | |

Segment Notes:

This segment is used to identify the location where the terms of delivery apply.

Example:
LOC+1+BE-BRU'

## 5. Segments Layout

Segment number: 83

| **UNS** - M 1 - Section control | | | | |
|---|---|---|---|---|
| Function:<br>To separate header, detail and summary sections of a message.<br><br>Notes:<br>To be used by message designers only when required to avoid ambiguities. | | | | |
| | EDIFACT | GS1 | * | Description |
| 0081 Section identification | M a1 | **M** | | S = Detail/summary section separation |
| Segment Notes:<br>This segment is used to identify the break between the message detail and message trailer sections.<br><br>Example:<br>UNS+S' | | | | |

## 5. Segments Layout

Segment number: 84

| **CNT** - C 10 - Control total | | | | | |
|---|---|---|---|---|---|
| Function:<br>To provide control total. | | | | | |
| | | EDIFACT | GS1 | * | Description |
| C270 | CONTROL | M | **M** | | |
| 6069 | Control total type code qualifier | M an..3 | **M** | * | 1 = Total value of the quantity segments at line level in a message<br>2 = Number of line items in message<br>7 = Total gross weight<br>11 = Total number of packages<br>15 = Total consignment, cube<br>26 = Total gross measurement/cube |
| 6066 | Control total value | M n..18 | **M** | | |
| 6411 | Measurement unit code | C an..3 | **O** | | |
| Segment Notes:<br>This segment is used to provide message control information for checking on the message receiver's in-house system.<br><br>Example:<br>CNT+2:120' | | | | | |

## 5. Segments Layout

Segment number: 85

| | | | | |
|---|---|---|---|---|
| **SG50** | - M | 100 | - | MOA-SG51 |
| **MOA** | - M | 1 | - | Monetary amount |

Function:

To specify a monetary amount.

| | | EDIFACT | GS1 | * | Description |
|---|---|---|---|---|---|
| C516 | MONETARY AMOUNT | M | **M** | | |
| 5025 | Monetary amount type code qualifier | M an..3 | **M** | | 9 = Amount due/amount payable<br>53 = Discount amount due<br>79 = Total line items amount<br>86 = Message total monetary amount<br>113 = Prepaid amount<br>125 = Taxable amount<br>129 = Total amount subject to payment discount<br>131 = Total charges/allowances<br>165 = Adjustment amount<br>176 = Message total duty/tax/fee amount<br>396 = Total price subsidy value<br>402 = Total retail value<br>507 = Net-progress payment amount<br>528 = Calculation basis excluding all taxes |
| 5004 | Monetary amount | C n..35 | **R** | | |
| 6345 | Currency identification code | C an..3 | **O** | | |
| 6343 | Currency type code qualifier | C an..3 | **O** | | 13 = Recipient local currency<br>15 = Sender local currency |
| 4405 | Status description code | C an..3 | **N** | | |

Segment Notes:

This segment is used to detail prepaid amounts, or total monetary values due for the entire invoice.

Example:
MOA+86:45612.20'

## 5. Segments Layout

Segment number: 86

| | | | | |
|---|---|---|---|---|
| **SG50** | - M | 100 | - | MOA-SG51 |
| **SG51** | - C | 10 | - | RFF-DTM |
| **RFF** | - M | 1 | - | Reference |

Function:

To specify a reference.

| | | EDIFACT | GS1 | * | Description |
|---|---|---|---|---|---|
| C506 | REFERENCE | M | **M** | | |
| 1153 | Reference code qualifier | M an..3 | **M** | | PQ = Payment reference |
| 1154 | Reference identifier | C an..70 | **R** | | |
| 1156 | Document line identifier | C an..6 | **N** | | |
| 4000 | Reference version identifier | C an..35 | **N** | | |
| 1060 | Revision identifier | C an..6 | **N** | | |

Segment Notes:

This segment is used to specify any references related to the message totals information.

Example:
RFF+PQ:4452'

## 5. Segments Layout

Segment number: 87

| | | | | |
|---|---|---|---|---|
| **SG50** | - M | 100 | - | MOA-SG51 |
| **SG51** | - C | 10 | - | RFF-DTM |
| **DTM** | - C | 5 | - | Date/time/period |

Function:

To specify date, and/or time, or period.

| | | EDIFACT | GS1 | * | Description |
|---|---|---|---|---|---|
| C507 | DATE/TIME/PERIOD | M | **M** | | |
| 2005 | Date or time or period function code qualifier | M an..3 | **M** | * | 171 = Reference date/time |
| 2380 | Date or time or period value | C an..35 | **R** | | |
| 2379 | Date or time or period format code | C an..3 | **R** | | 102 = CCYYMMDD |

Segment Notes:

This segment is used to provide any dates related to the references specified in the previous RFF segment.

Example:
DTM+171:20020802:102'

## 5. Segments Layout

Segment number: 88

| | | | |
|---|---|---|---|
| **SG52** | - C | 10 - | TAX-MOA |
| **TAX** | - M | 1 - | Duty/tax/fee details |

Function:

To specify relevant duty/tax/fee information.

| | | EDIFACT | GS1 | * | Description |
|---|---|---|---|---|---|
| 5283 | Duty or tax or fee function code qualifier | M an..3 | **M** | | 5 = Customs duty<br>7 = Tax |
| C241 | DUTY/TAX/FEE TYPE | C | **D** | | |
| 5153 | Duty or tax or fee type name code | C an..3 | **O** | | GST = Goods and services tax<br>VAT = Value added tax |
| 1131 | Code list identification code | C an..17 | **O** | | |
| 3055 | Code list responsible agency code | C an..3 | **D** | | |
| 5152 | Duty or tax or fee type name | C an..35 | **O** | | |
| C533 | DUTY/TAX/FEE ACCOUNT DETAIL | C | **O** | | |
| 5289 | Duty or tax or fee account code | M an..6 | **M** | | |
| 1131 | Code list identification code | C an..17 | **O** | | |
| 3055 | Code list responsible agency code | C an..3 | **D** | | |
| 5286 | Duty or tax or fee assessment basis value | C an..15 | **O** | | |
| C243 | DUTY/TAX/FEE DETAIL | C | **A** | | |
| 5279 | Duty or tax or fee rate code | C an..7 | **O** | | |
| 1131 | Code list identification code | C an..17 | **O** | | |
| 3055 | Code list responsible agency code | C an..3 | **D** | | |
| 5278 | Duty or tax or fee rate | C an..17 | **R** | | The actual rate of tax/duty. |
| 5273 | Duty or tax or fee rate basis code | C an..12 | **O** | | |
| 1131 | Code list identification code | C an..17 | **O** | | |
| 3055 | Code list responsible agency code | C an..3 | **D** | | |
| 5305 | Duty or tax or fee category code | C an..3 | **D** | | A = Mixed tax rate<br>E = Exempt from tax<br>S = Standard rate |
| 3446 | Party tax identifier | C an..20 | **O** | | |
| 1227 | Calculation sequence code | C an..3 | **N** | | |

Segment Notes:

This segment is used to specify the total taxes or duties due on the complete invoice.

Example:
TAX+7+VAT+++:::21+S'
TAX+7+VAT+++:::12.5+S'
TAX+7+VAT+++:::15+S'
Three repeats of the segment indicates that there are three standard rates of VAT included in the invoice.

## 5. Segments Layout

Segment number: 88

Dependency Notes:
DE C241 and 5305: Tax types and categories will differ from country to country. They are to be defined by national guidelines.

## 5. Segments Layout

Segment number: 89

| | | | |
|---|---|---|---|
| **SG52** | - C | 10 - | TAX-MOA |
| **MOA** | - C | 9 - | Monetary amount |

Function:

To specify a monetary amount.

| | | EDIFACT | GS1 | * | Description |
|---|---|---|---|---|---|
| C516 | MONETARY AMOUNT | M | **M** | | |
| 5025 | Monetary amount type code qualifier | M an..3 | **M** | * | 77 = Invoice amount<br>79 = Total line items amount<br>165 = Adjustment amount<br>124 = Tax amount<br>125 = Taxable amount<br>176 = Message total duty/tax/fee amount<br>369 = Goods and services tax |
| 5004 | Monetary amount | C n..35 | **R** | | |
| 6345 | Currency identification code | C an..3 | **N** | | |
| 6343 | Currency type code qualifier | C an..3 | **O** | * | 18 = Tax currency |
| 4405 | Status description code | C an..3 | **N** | | |

Segment Notes:

This segment is used to specify the tax amounts due, for the tax rate specified in the TAX segment, covering the whole invoice.

Example:
MOA+176:15243.32'

## 5. Segments Layout

Segment number: 90

| | | | |
|---|---|---|---|
| **SG53** | - C | 15 - | ALC-ALI-MOA |
| **ALC** | - M | 1 - | Allowance or charge |

Function:

To identify allowance or charge details.

| | | EDIFACT | GS1 | * | Description |
|---|---|---|---|---|---|
| 5463 | Allowance or charge code qualifier | M an..3 | **M** | | A = Allowance<br>C = Charge |
| C552 | ALLOWANCE/CHARGE INFORMATION | C | **O** | | |
| 1230 | Allowance or charge identifier | C an..35 | **D** | | If code '69' is used in DE 5189, the agreement number must be specified in DE 1230. |
| 5189 | Allowance or charge identification code | C an..3 | **O** | | 69 = Charge for a customer specific finish |
| 4471 | Settlement means code | C an..3 | **O** | | |
| 1227 | Calculation sequence code | C an..3 | **N** | | |
| C214 | SPECIAL SERVICES IDENTIFICATION | C | **D** | | This composite is only included if the buyer knows the type of allowance or charge. |
| 7161 | Special service description code | C an..3 | **O** | | |
| 1131 | Code list identification code | C an..17 | **O** | | |
| 3055 | Code list responsible agency code | C an..3 | **D** | | |
| 7160 | Special service description | C an..35 | **O** | | |
| 7160 | Special service description | C an..35 | **O** | | |

Segment Notes:

This segment is used to specify per allowance or charge type totals for each allowances and charges. Allowances and charges detailed both at the header level and on individual product lines are summarized here.

Example:
ALC+A+21108'

## 5. Segments Layout

Segment number: 91

| | | | |
|---|---|---|---|
| **SG53** | - C | 15 - | ALC-ALI-MOA |
| **ALI** | - C | 1 - | Additional information |

Function:

To indicate that special conditions due to the origin, customs preference, fiscal or commercial factors are applicable.

| | | EDIFACT | GS1 | * | Description |
|---|---|---|---|---|---|
| 3239 | Country of origin name code | C an..3 | **O** | | Use ISO 3166 Code |
| 9213 | Duty regime type code | C an..3 | **O** | | |
| 4183 | Special condition code | C an..3 | **O** | | 6 = Subject to bonus<br>15 = Not subject to discount |
| 4183 | Special condition code | C an..3 | **O** | | |
| 4183 | Special condition code | C an..3 | **O** | | |
| 4183 | Special condition code | C an..3 | **O** | | |
| 4183 | Special condition code | C an..3 | **O** | | |

Segment Notes:

This segment is used to indicate any special conditions applicable to the allowances or charges at summary level.

Example:
ALI+++6'

## 5. Segments Layout

Segment number: 92

| | | | |
|---|---|---|---|
| **SG53** | - C | 15 - | ALC-ALI-MOA |
| **MOA** | - C | 2 - | Monetary amount |

Function:

To specify a monetary amount.

| | | EDIFACT | GS1 | * | Description |
|---|---|---|---|---|---|
| C516 | MONETARY AMOUNT | M | **M** | | |
| 5025 | Monetary amount type code qualifier | M an..3 | **M** | * | 8 = Allowance or charge amount<br>25 = Charge/allowance basis<br>131 = Total charges/allowances<br>400 = Rebate amount |
| 5004 | Monetary amount | C n..35 | **R** | | |
| 6345 | Currency identification code | C an..3 | **N** | | |
| 6343 | Currency type code qualifier | C an..3 | **N** | | |
| 4405 | Status description code | C an..3 | **N** | | |

Segment Notes:

This segment is used to specify the total monetary value per allowance or charge type.

Example:
MOA+131:6583.49'

## 5. Segments Layout

Segment number: 93

| **UNT** - M 1 - Message trailer | | | | | |
|---|---|---|---|---|---|
| Function:<br>To end and check the completeness of a message.<br><br>Notes:<br>1. 0062, the value shall be identical to the value in 0062 in the corresponding UNH segment. | | | | | |
| | | EDIFACT | GS1 | * | Description |
| 0074 | Number of segments in a message | M n..10 | **M** | | The total number of segments in the message is detailed here. |
| 0062 | Message reference number | M an..14 | **M** | | The message reference number detailed here should equal the one specified in the UNH segment. |
| Segment Notes:<br>This segment is a mandatory UN/EDIFACT segment. It must always be the last segment in the message.<br><br>Example:<br>UNT+103+1' | | | | | |

## 5. Segments Layout

Segment number: 94

| **UNZ** - M 1 - Interchange trailer | | | | | |
|---|---|---|---|---|---|
| Function:<br>To end and check the completeness of an interchange.<br><br>Notes:<br>1. 0020, the value shall be identical to the value in 0020 in the corresponding UNB segment. | | | | | |
| | | EDIFACT | GS1 | * | Description |
| 0036 | Interchange control count | M n..6 | **M** | | Number of messages or functional groups within an interchange. |
| 0020 | Interchange control reference | M an..14 | **M** | | Identical to DE 0020 in UNB segment. |
| Segment Notes:<br>This segment is used to provide the trailer of an interchange.<br>DE 0036: If functional groups are used, this is the number of functional groups within the interchange. If functional groups are not used, this is the number of messages within the interchange.<br>UNZ+5+12345555' | | | | | |

## 6. Examples

The following is an example of an Invoice message sent from the supplier identified by GLN 4012345500004 with a VAT registration number VR12345 to a buyer identified by GLN 5412345000013 with a VAT registration number 4146023.

The Commercial Invoice with reference IN432097 is sent the 8 March 2002. It is invoicing goods ordered the 12 February 2002 according to the purchase order with reference ORD9523 and the price list PL99523 of 1 January 2002. The ordered goods were shipped by the supplier on 15 February 2002 to the delivery point identified by the location number 5412345678908. The reference number for the delivery was 53662.

The invoicing currency is Euros. The basic payment terms are two months net with a 2.5% discount if payment is received within 10 days of the invoice date. Payment is to be made directly to the supplier's bank account.

Additionally, for the whole invoice there is a freight charge of 120 EUR plus a standard 19% VAT rate.

The invoice consists of two line items:

- The first item is identified by GTIN 4000862141404. 40 units at a **gross unit price** (catalogue price) of 60 EUR are being invoiced. There is a 10% discount on the gross unit price and a standard VAT rate of 21% is applicable. The net line item amount is 2160 EUR. Allowances or charges **must** be specified for calculation.

- The second item is identified by GTIN 5412345111115. 5 units were delivered at a **net unit price** per kilogram of 200 EUR. The quantity being invoiced is the total weight of the 5 units, 12.65 KGs, for a net line item amount of 2530 EUR. A standard VAT rate of 19% is applicable. Allowances or charges may be specified here for information not calculation purposes.

The Invoice provides message amount totals and tax subtotals for the two line items, as follows,

| | | | | | |
|---|---|---|---|---|---|
| Net line amounts | = | 2160+2530 | = | 4690 | (Qualifier 79 MOA (Vat Exclusive)) |
| Additional amounts | | | = | 120 | (Qualifier 131 MOA after ALC) |
| Amount Subject to tax | | | = | 4810 | (Qualifier 125 MOA) |
| | | | | | |
| VAT 19% | = | 2530 x 0.19 | = | 480.70 | |
| | | 120 x 0.19 | = | 22.80 | |
| | | | | 503.50 | (Qualifier 124 MOA after TAX) |
| VAT 21% | = | 2160 x 0.21 | = | 453.60 | (Qualifier 124 MOA after TAX) |
| | | | | | |
| Total tax amount | | | = | 957.10 | (Qualifier 176 MOA) |
| Message monetary amount | = | 4810 + 957.10 | = | 5767.10 | (Qualifier 86 MOA) |
| Amount subject to payment discount | | | = | 5767.10 | (Qualifier 129 MOA) |

**Invoice message**

| | |
|---|---|
| UNH+ME000001+INVOIC:D:01B:UN:EAN011' | Message header |
| BGM+380+IN432097' | Commercial invoice number IN432097 |
| DTM+137:20020308:102' | Message date 8th March 2002 |
| PAI+::42' | Instructions to pay in bank account |

**6. Examples**

| | |
|---|---|
| RFF+ON:ORD9523' | Purchase order invoiced number ORD9523 |
| DTM+171:20020212:102' | Reference date 12th February 2002 |
| RFF+PL:PL99523' | Price list reference number PL99523 |
| DTM+171:20020101:102' | Reference date 1st January 2002 |
| RFF+DQ:53662' | Reference delivery note number 53662 |
| DTM+171:20020215:102' | Reference date 15th February 2002 |
| NAD+BY+5412345000013::9' | Buyer identified by GLN 5412345000013 |
| RFF+VA:4146023' | VAT reference number of the buyer 4146023 |
| NAD+SU+4012345500004::9' | Supplier identified by GLN 4012345500004 |
| RFF+VA:VR12345' | VAT reference number of the supplier VR12345 |
| NAD+DP+5412345678908::9' | Delivery party identified by GLN 5412345678908 |
| CUX+2:EUR:4' | Reference currency is Euros |
| PAT+1++5:3:M:2' | Payment terms 2 months after date of invoice |
| PAT+22++5:3:D:10' | Payment discount for payment 10 days after date of invoice |
| PCD+12:2.5:13' | Percentage information for the allowances or charges 2.5 % |
| ALC+C++6++FC' | Charges to be paid by customer |
| MOA+23:120' | Monetary amount for the charge 120 EUR to be added |
| TAX+7+VAT+++:::19+S' | Type of tax is value added tax at 19 % |
| MOA+124:22.80' | Tax monetary amount 22.80 EUR |
| LIN+1++4000862141404:SRV' | Line item 1 identified by GTIN 4000862141404 |
| QTY+47:40' | Invoiced quantity 40 |
| MOA+203:2160' | Line item amount 2.160 EUR |
| PRI+AAB:60:CA' | Gross calculation price of 60 which does not include any allowance or charges, from the catalogue. |
| TAX+7+VAT+++:::21+S' | Type of tax for the line item is value added tax 21% |
| MOA+124:453.60' | Tax monetary amount 453.60 EUR |
| ALC+A' | Allowances |
| PCD+1:10' | Percentage information for the allowances 10 % |
| LIN+2++5412345111115:SRV' | Line item 2 identified by GTIN 5412345111115 |
| QTY+46:5' | Delivered quantity 5 |
| QTY+47:12.65:KGM' | Invoiced quantity 12.65 Kg. |

**6. Examples**

| | |
|---|---|
| MOA+203:2530' | Line item amount 2.530 EUR |
| PRI+AAA:200:CA::1:KGM' | Net price of 200 per Kg from the catalogue, this price includes allowances and charges |
| TAX+7+VAT+++:::19+S' | Type of tax for the line item is value added tax 19 % |
| MOA+124:480.70' | Tax monetary amount 480.70 EUR |
| UNS+S' | To separate the detail section from the summary section |
| CNT+2:2' | Total number of line items 2 |
| MOA+86:5767.10' | Message total monetary amount 5.767,10 EUR |
| MOA+79:4690' | Message total line items amount 4.690 EUR |
| MOA+129:5767.10' | Total amount subject to payment discount 5.767.10 EUR |
| MOA+125:4810' | Message total taxable amount 4.810 EUR |
| MOA+176:957.10' | Message total tax amount 957,10 EUR |
| MOA+131:120' | Total charges/allowances 120 EUR |
| TAX+7+VAT+++:::19+S' | Type of tax for the total message is value added tax 19 % |
| MOA+124:503.50' | Tax monetary amount 503.50 EUR |
| TAX+7+VAT+++:::21+S' | Type of tax for the total message is value added tax 21% |
| MOA+124:453.60' | Tax monetary amount 453.60 EUR |
| ALC+C++++FC' | Freight charge |
| MOA+131:120' | Total charges 120 EUR |
| UNT+53+ME000001' | Total number of segments in the message equals 53 |

Note:
The EDI interchange will include the UNB..UNZ segments and, if applicable, the UNG..UNE segments. (see Part I, section 5.7)