EANCOM® 2002 S4

INVRPT

Inventory report message

Edition 2016 Upd. 2021

1. Introduction 2
2. Message Structure Chart 8
3. Branching Diagram 9
4. Segments Description 13
5. Segments Layout 16
6. Example(s) 59

1. Introduction

Status

MESSAGE TYPE	: INVRPT
REFERENCE DIRECTORY	: D.01B
EANCOM® SUBSET VERSION	: 006

Definition

A message specifying information related to held inventories and planned or targeted inventories. The Inventory Report message is intended to be used in either direction between trading partners.

Principles

The exchanged information will relate to inventories of raw materials, manufactured articles, returnable containers which are EAN.UCC coded and which can be exchanged or returned, or other inventoriable goods.

The information can be exchanged between a manufacturer and a distributor (wholesaler), manufacturer and consignment holder, retailer to wholesaler, headquarters or service provider, etc.

The message includes functionality to differentiate classes of inventory, and to permit financial valuation of inventories.

The specified quantities relating to held product can indicate opening stock, actual stock, quality control held stocks, damaged stock, and goods movement (receipts or withdrawals) of held inventory, for a given time frame.

The specified quantities may also relate to planned or targeted inventories and can indicate model or target stock, minimum stock, maximum stock and reordering point stock levels.

The specified quantities can relate directly to a product or package, and may be sub-detailed within different groups or classes, e.g. batch, location, age, etc.

For every specified quantity it is possible to indicate status information (events which have happened and the reasons for the events), and the relative package identifications of the physical units involved.

Structure of the Inventory Report Message

The EANCOM® Inventory Report message may have two basic structures, a simple and an extended, depending if the stock report covers one stock-holding location or multiple locations.

Specific stock attributes such as batch numbers, production or sell by dates and shipping container information may be provided in both structures.

The tables below summarise the possible functionalities within the simple and extended Inventory Report messages, with the principal segments used in each case.

(see Table 1 and Table 2)

The functionalities described in the simple and extended Inventory Report tables are not necessarily mutually exclusive. Segments marked as "Not used" are not needed to cover the functionality described but may be needed when combining two or more of the functionalities outlined.

For example, it is possible to have a simple Inventory Report providing the total stock of a product within a location, and dividing the total stock quantity into sub-quantities by production date. Additionally, the serialised pallets carrying the stock may be identified together with a pallet minimum durability date.

Identification of Individual Shipping Containers

The EAN.UCC Serial Shipping Container Code

The Serial Shipping Container Code (abbreviated SSCC) is an EAN.UCC standard designed to identify uniquely individual transport packages. It enables merchandise that is packed differently from one transport package to

1. Introduction

another, for example where products are picked and packed to meet individual orders, to be identified. The standard can support operations such as despatch, distribution and receiving of non-standardised packages.

The general code structure is:

```
P     MMMMMMM SSSSSSSSS     C

1   <-------7-------><-----9----->     1
```

where

P	=	Packaging indicator
M..M	=	EAN.UCC prefix/company number
S..S	=	Serial number assigned by the company
C	=	Data check digit

The Serial Shipping Container Code may be bar coded, enabling automatic data capture, using the Application Identifier 00 and the UCC/EAN-128 bar code symbology. For further information please refer to the UCC/EAN Application Identifier Standard.

Table 1

SIMPLE INVENTORY REPORT: Stock report covering one location for one or more products.

FUNCTIONALITIES:	PRINCIPAL SEGMENTS USED					
	HEADER SECTION		DETAIL SECTION			
	NAD	CUX-DTM	LIN	QTY and PRI	GIN-LOC-DTM-RFF	CPS-PAC-GIN-DTM
1. Total stock per product within location.	Identifies sender and receiver of message. Identifies stock reporting location if different from message sender. Locations identified by GLN.	Not used.	Identifies GTIN. One LIN repetition per product.	Both segments used to indicate the stock quantities and the cost or retail price for the product.	Not used.	Not used.
2. Total stock quantity divided in sub-quantities according to specific attributes, e.g. stock sub-quantity from a specific batch/serial numbers or date.	Identifies sender and receiver of message. Identifies stock reporting location if different from message sender. Locations identified by GLN.	Not used.	Identifies GTIN.	Identifies stock totals for the full attribute, e.g. batch, stock sub-quantity for a specific attribute, and the cost or retail price for the product.	Identifies attribute to stock sub-quantity. GIN specifies batch or serial numbers. DTM specifies dates such as production or best before dates.	Not used.
3. Total stock quantity divided in sub-quantities according to shipping container.	Identifies sender and receiver of message. Identifies stock reporting location if different from message sender. Locations identified by GLN.	Not used.	Identifies GTIN.	Identifies stock totals for the full attribute, e.g. shipping container, provides sub-quantity relevant to a type of shipping container or a specific shipping container, and the cost or retail price for the product.	Not used.	PAC identifies the number and type of shipping container. GIN provides the Serial Shipping Container Code. DTM may be used to provide relevant dates per shipping container.

Table 2

EXTENDED INVENTORY REPORT: Stock report covering several locations for one or more products.

FUNCTIONALITIES:	PRINCIPAL SEGMENTS USED					
	HEADER SECTION		DETAIL SECTION			
	NAD	CUX-DTM	LIN	QTY and PRI	GIN-LOC-DTM-RFF	CPS-PAC-GIN-DTM
1. Total stock per product and per location for several locations.	Identifies sender and receiver of message. Locations identified by GLN.	Not used.	Identifies GTIN.	Identifies the total stock quantity of product identified in LIN for the location identified in LOC, the total stock for the product in all locations, and the retail price for the product.	LOC identifies the location where stock is held. Locations identified by GLN. DTM may identify the stock report date if different than date at header level.	Not used.
2. Total stock quantity divided in sub-quantities per location according to specific attributes, e.g. stock sub-quantity from a specific batch/serial numbers or date.	Identifies sender and receiver of message. Locations identified by GLN.	Not used.	Identifies GTIN.	Identifies the stock sub-quantity for a specific attribute within a location, the total stock for the product in all locations, and the retail price for the product.	LOC identifies the location where stock is held. Locations identified by GLN. Identifies attribute to stock sub-quantity within a location. GIN specifies batch or serial numbers. DTM specifies stock report date and other dates such as production or best before dates.	Not used.
3. Total stock quantity divided in sub-quantities per location according to shipping container.	Identifies sender and receiver of message. Locations identified by GLN.	Not used.	Identifies GTIN.	Identifies the stock sub-quantities per location relevant to a type of shipping container or a specific shipping container, the total stock for the product in all locations, and the retail price of the product.	LOC identifies the location where stock is held. DTM may identify the stock report date if different than date at header level.	PAC identifies the number and type of shipping container. GIN provides the Serial Shipping Container Code. DTM may be used to provide relevant dates per shipping container.

Quantity Qualifiers Used in the Inventory Report Message

The graphs below provide a simplified illustration of some of the stock quantities which may be provided in the Inventory Report message as part of a stock management control system. This section does not intend to provide a brief overview of stock management systems which are complex and dependent on a large number of other parameters. The aim is to provide a conceptual definition of some of the stock quantity values which may be transmitted in the Inventory Report message.

The Automatic Stock Replenishment graph illustrates a stock management system controlled by a fixed and constant reordering point somewhere in between fixed and constant maximum and minimum stock levels. Product demand/sales forecasts are relatively stable (assume constant) through time.

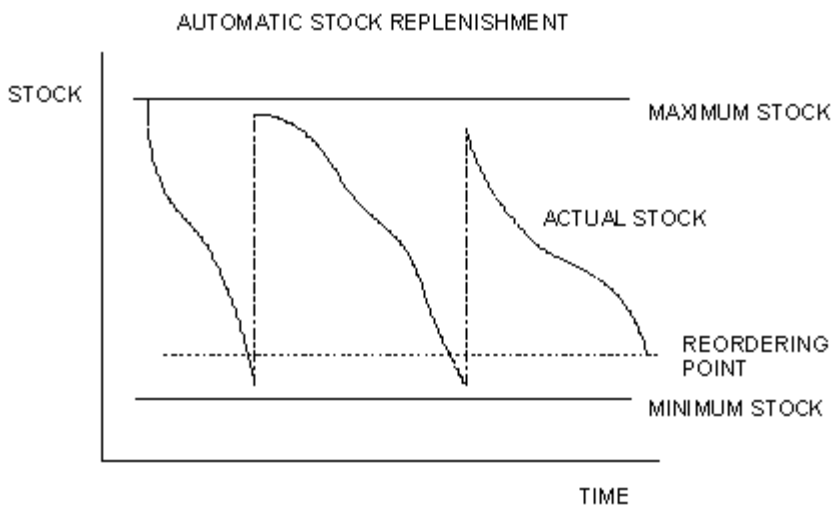

The difference between the maximum and minimum stock levels is the safety or buffer stock. If inventory falls below the reordering point, an order may be automatically triggered, followed by delivery.

The difference between the reordering point and the minimum stock level is dependent mainly on the delivery lead time, as well as turnover of the product, price of the product, demand/sales variations and other variables. A margin between the reordering point and the minimum stock level will prevent out-of-stock situations.

The difference between the maximum stock level and the reordering point is dependent mainly on the delivery frequency as well as product turnover, demand/sales variations and other variables.

Stock levels may be reduced by minimising the difference between maximum stock level and the reordering point, e.g. within a Just In Time or Quick Response environment the goal is to deliver product on a "as-needed" basis through frequent deliveries thus eliminating safety stock.

The Sales Forecasted Target Stock graph illustrates a stock management system controlled by a variable model or target stock somewhere in between variable maximum and minimum stock levels. The difference between the maximum and minimum stock levels is the buffer of safety stock held. Product demand is variable in this case and actual sales data (SLSRPT) and sales forecast (SLSFCT) information determine the maximum, minimum and optimum or target stock levels.

1. Introduction

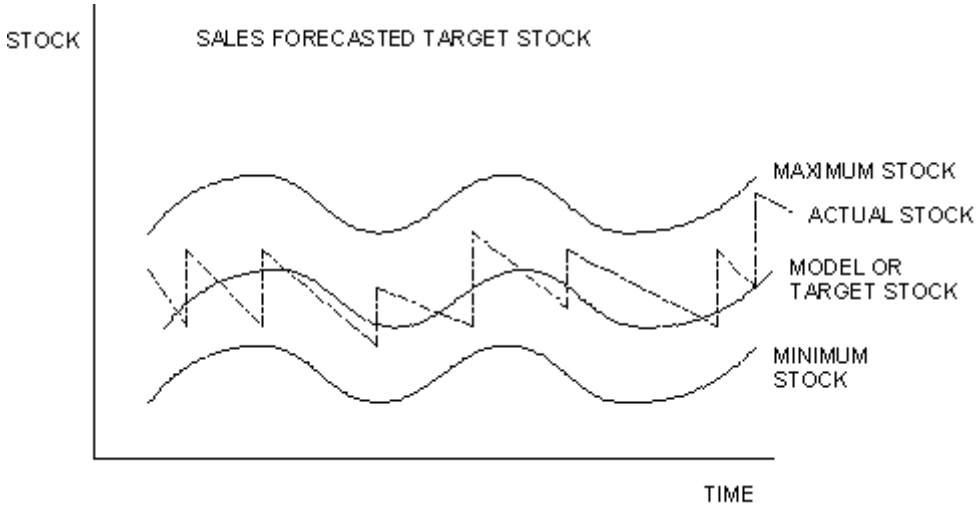

The goal is to maintain the actual stock level as close as possible to the model or target stock. More frequent deliveries and shorter delivery lead times will allow actual stock levels to match target stock levels more closely.

The reordering point in this case is variable and dependent on the target stock level at any given point in time. The buffer or safety stock can be reduced, i.e. the maximum and minimum stock levels converge closer and closer towards the target stock level, through more accurate sales data and sales forecasting.

Data on actual and target inventories can be used in combination with actual sales data (EANCOM® Sales Data Report - SLSRPT) and sales forecasting data (EANCOM® Sales Forecast - SLSFCT) to maintain stock levels close to the model or target stock level or within an automatic replenishment environment to trigger reordering and delivery.

Accurate inventory and forecasting data will enable manufacturers to better control production requirements and distributors to optimise safety or buffer stock levels taking into account the cost of held inventories and market response.

2. Message Structure Chart

UNA		1	C	1	- Service string advice
UNB		2	M	1	- Interchange header
Inventory Report Heading Section					
UNH		3	M	1	- Message header
BGM		4	M	1	- Beginning of message
DTM		5	M	10	- Date/time/period
SG1			C	10	- RFF-DTM
RFF		6	M	1	- Reference
DTM		7	C	1	- Date/time/period
SG2			C	20	- NAD-SG3-SG4
NAD		8	M	1	- Name and address
SG3			C	99	- RFF
RFF		9	M	1	- Reference
SG4			C	10	- CTA-COM
CTA		10	M	1	- Contact information
COM		11	C	5	- Communication contact
SG5			C	5	- CUX-DTM
CUX		12	M	1	- Currencies
DTM		13	C	1	- Date/time/period
Inventory Report Detail Section					
SG9	*		C	9999999	- LIN-PIA-IMD-ALI-SG11
LIN		14	M	1	- Line item
PIA		15	C	10	- Additional product id
IMD		16	C	10	- Item description
ALI	+	17	C	10	- Additional information
SG11	*		C	9999	- INV-QTY-GIN-LOC-DTM-STS-SG12-SG13-SG14-SG15
INV		18	M	1	- Inventory management related details
QTY		19	M	1	- Quantity
GIN		20	C	9999	- Goods identity number
LOC		21	C	5	- Place/location identification
DTM		22	C	5	- Date/time/period
STS		23	C	9	- Status
SG12			C	5	- NAD
NAD		24	M	1	- Name and address
SG13			C	5	- PRI
PRI		25	M	1	- Price details
SG14			C	10	- RFF-DTM
RFF		26	M	1	- Reference
DTM		27	C	1	- Date/time/period
SG15			C	9999	- CPS-SG16
CPS		28	M	1	- Consignment packing sequence
SG16			C	9999	- PAC-SG17
PAC		29	M	1	- Package
SG17			C	9999	- PCI-DTM-GIN
PCI		30	M	1	- Package identification
DTM		31	C	5	- Date/time/period
GIN		32	C	9999	- Goods identity number
Inventory Report Summary Section					
UNT		33	M	1	- Message trailer
UNZ		34	M	1	- Interchange trailer

3. Branching Diagram

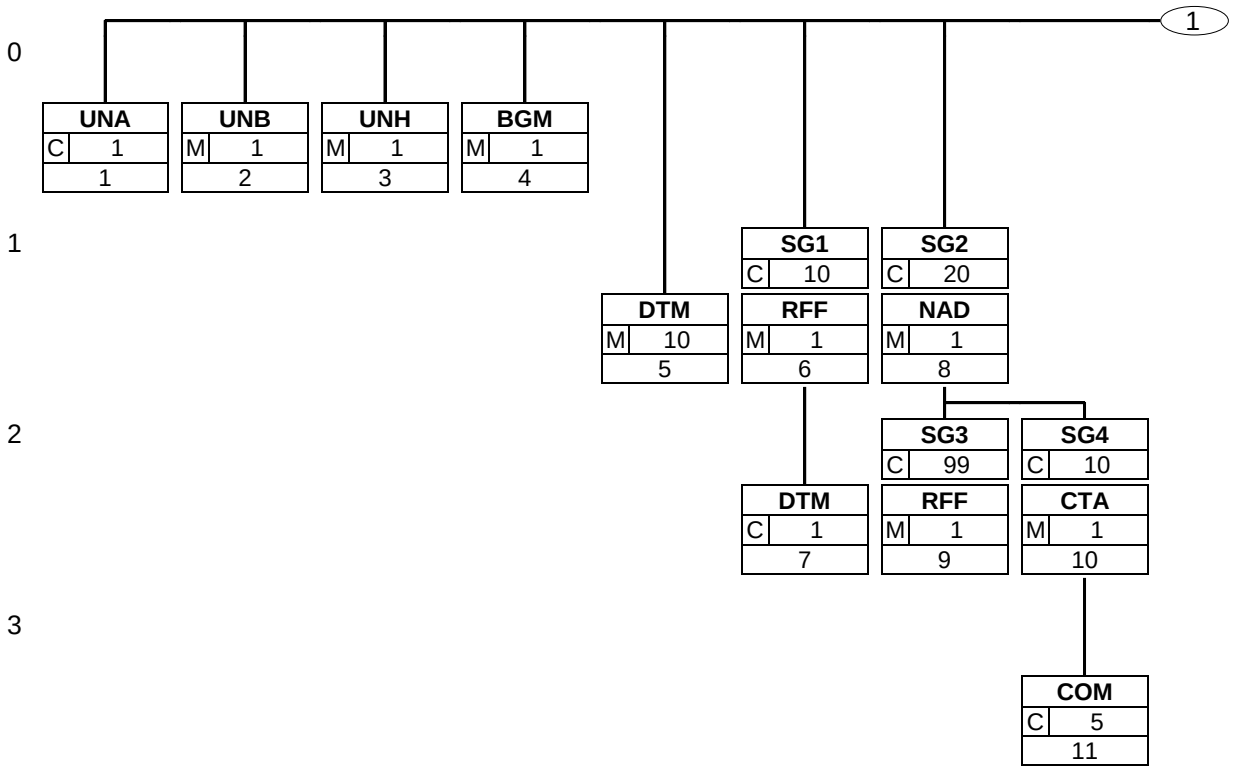

3. Branching Diagram

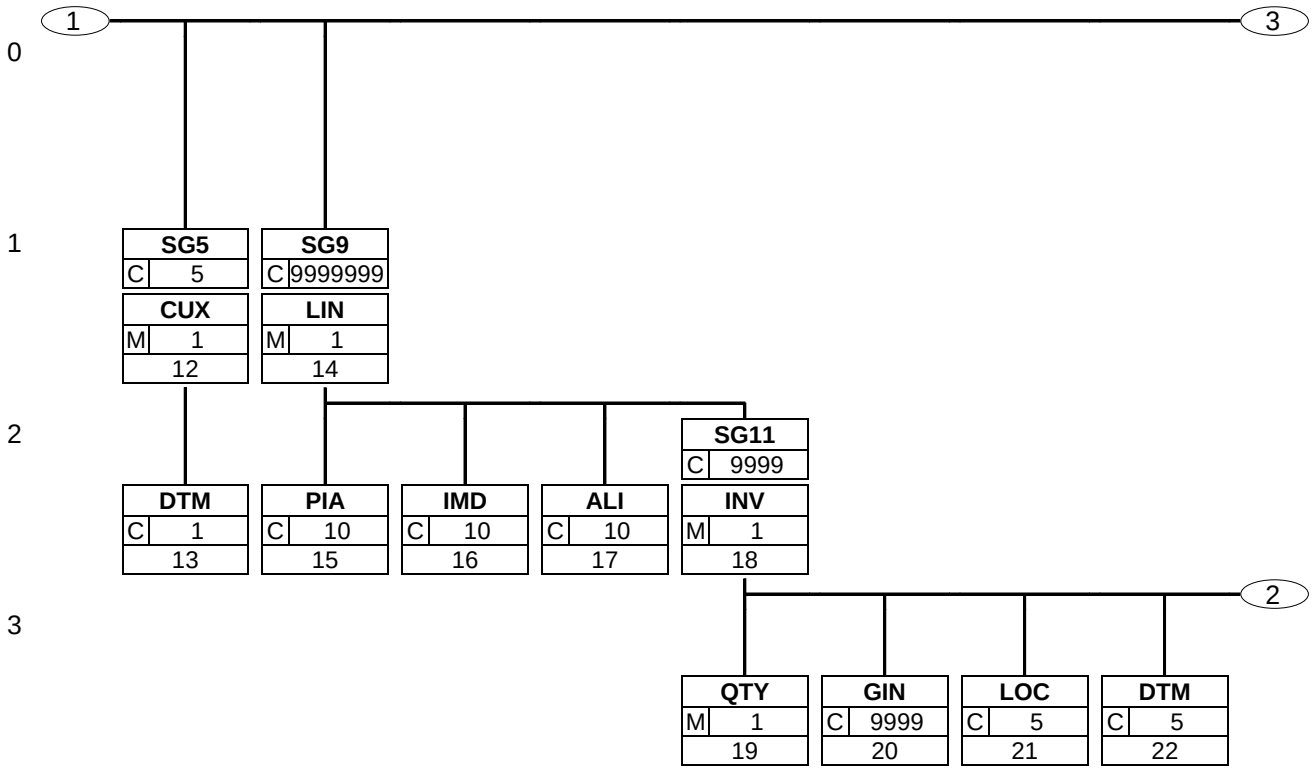

3. Branching Diagram

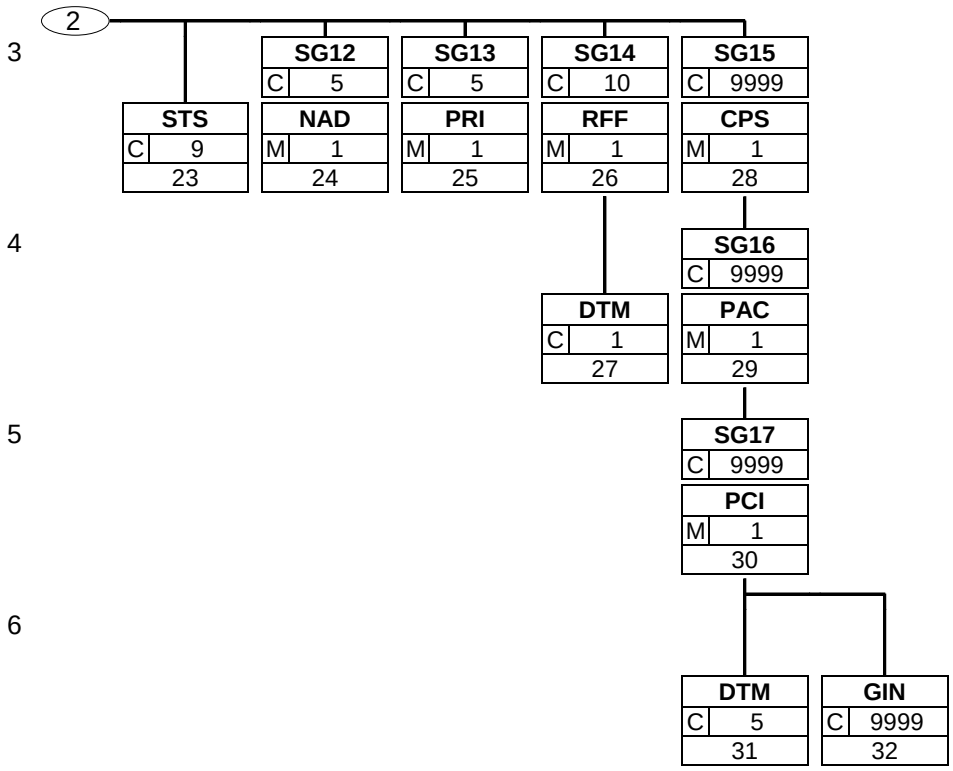

3. Branching Diagram

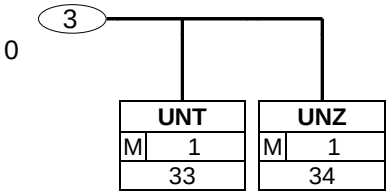

4. Segments Description

UNA - C 1 - Service string advice

This segment is used to inform the receiver of the interchange that a set of service string characters which are different to the default characters are being used.

UNB - M 1 - Interchange header

This segment is used to envelope the interchange, as well as to identify both, the party to whom the interchange is sent and the party who has sent the interchange. The principle of the UNB segment is the same as a physical envelope which covers one or more letters or documents, and which details, both the address where delivery is to take place and the address from where the envelope has come.

Inventory Report Heading Section

UNH - M 1 - Message header

This segment is used to head, identify and specify a message.

BGM - M 1 - Beginning of message

This segment is used to indicate the type and function of a message and to transmit the identifying number.

DTM - M 10 - Date/time/period

This segment is used to specify any dates relevant to the complete Inventory Report.

SG1 - C 10 - **RFF-DTM**

A group of segments giving references and where necessary, their dates relating to the whole message, e.g., a contract, dispatch advice number, etc.

RFF - M 1 - Reference

This segment is used to provide references for the entire message.

DTM - C 1 - Date/time/period

This segment is used to specify dates or periods relating to the references given in the previous RFF segment.

SG2 - C 20 - **NAD-SG3-SG4**

A group of segments identifying names, addresses and locations relevant to the whole message.

NAD - M 1 - Name and address

This segment is used to identify the trading partners involved in the Inventory Report message. Identification of the parties exchanging the message is mandatory in EANCOM.

SG3 - C 99 - **RFF**

A group of segments giving references only relating to the specified party, rather than the whole message.

RFF - M 1 - Reference

This segment is used to specify any references related to the party identified in the previous NAD segment.

SG4 - C 10 - **CTA-COM**

A group of segments to identify person, function, department, and where appropriate numbers to which the communications should be directed.

CTA - M 1 - Contact information

This segment is used to identify the contact name or department within the party specified in the NAD segment.

COM - C 5 - Communication contact

This segment identifies the communications number, and type of communications, for the person or department identified in the preceding CTA segment.

4. Segments Description

SG5	- C	5	- **CUX-DTM**
			A group of segments to indicate currencies used for financial evaluation.
CUX	- M	1	- Currencies
			This segment is used to specify the currencies in which prices in the Inventory Report are quoted.
DTM	- C	1	- Date/time/period
			This segment is used to specify any dates related to the previous CUX segment.

Inventory Report Detail Section

SG9	- C	9999999	- **LIN-PIA-IMD-ALI-SG11**
			A group of segments providing detailed information on each line of the inventory report.
LIN	- M	1	- Line item
			This segment is used to identify a specific line item in the inventory report.
PIA	- C	10	- Additional product id
			This segment is used to specify additional item identification codes such as a buyer's or supplier's item number.
IMD	- C	10	- Item description
			This segment is used to describe the current line item.
ALI	- C	10	- Additional information
			This segment is used to specify any additional information related to the current line item.
SG11	- C	9999	- **INV-QTY-GIN-LOC-DTM-STS-SG12-SG13-SG14-SG15**
			A group of segments providing a quantity with all inventorymanagement related information and optionally packagedetails, line item currencies and references.
INV	- M	1	- Inventory management related details
			This segment is used to identify the inventory movement direction.
QTY	- M	1	- Quantity
			This segment is used to express the quantities related to the current line item.
GIN	- C	9999	- Goods identity number
			This segment is used to provide additional identification numbers relevant to the line item identified in the LIN segment and specific to the quantities reported in the QTY segment.
LOC	- C	5	- Place/location identification
			This segment is used to identify the location of inventoried goods or the delivery location specific to the quantity reported in the QTY segment.
DTM	- C	5	- Date/time/period
			This segment is used to specify dates relevant to the quantity (or sub-quantity) specified in the QTY segment for the current line item.
STS	- C	9	- Status
			This segment is used to provide status information related to the current line item.
SG12	- C	5	- **NAD**
			A segment group to identify the owner of the inventory.
NAD	- M	1	- Name and address
			To specify the name/address and their related function, either by CO82 only and/or structured by CO80 thru 3207.
SG13	- C	5	- **PRI**
			A group of segments to provide price/cost/value information.

4. Segments Description

PRI	- M	1	- Price details The segment is used to specify the price information for the current line item.
SG14	- C	10	- **RFF-DTM** A group of segments giving references only relating to the specified quantity.
RFF	- M	1	- Reference This segment is used to identify any references specific to the current line item. References specified here override those given at heading level for the current line only when the same qualifier is used.
DTM	- C	1	- Date/time/period This segment is used to specify dates and times associated with the previous RFF segment.
SG15	- C	9999	- **CPS-SG16** A group of segments providing details of all package levels item or quantity. This segment group provides the capability to give the hierarchical relationship. The group defines a logical top-down packaging structure.
CPS	- M	1	- Consignment packing sequence This segment is used to provide a detailed description of the packaging of the goods held in stock.
SG16	- C	9999	- **PAC-SG17** A group of segments specifying the number and type of packages, identification of the packages and date/time information.
PAC	- M	1	- Package This segment is used to identify the type of packaging used for the current line item.
SG17	- C	9999	- **PCI-DTM-GIN** A segment group specifying markings, labels and packing.
PCI	- M	1	- Package identification This segment is used to specify markings and labels which have been marked on the packaging of the current line item.
DTM	- C	5	- Date/time/period This segment is used to specify any dates and/or times marked on the package.
GIN	- C	9999	- Goods identity number This segment is used to provide identification numbers relevant to one or more shipping containers or packaging units.

Inventory Report Summary Section

UNT	- M	1	- Message trailer The UNT segment is a mandatory UN/EDIFACT segment. It must always be the last segment in the message.
UNZ	- M	1	- Interchange trailer This segment is used to provide the trailer of an interchange.

5. Segments Layout

This section describes each segment used in the EANCOM® Inventory report message. The original EDIFACT segment layout is listed. The appropriate comments relevant to the EANCOM® subset are indicated.

Notes:

1. The segments are presented in the sequence in which they appear in the message. The segment or segment group tag is followed by the (M)andatory / (C)onditional indicator, the maximum number of occurrences and the segment description.

2. Reading from left to right, in column one, the data element tags and descriptions are shown, followed by in the second column the EDIFACT status (M or C), the field format, and the picture of the data elements. These first pieces of information constitute the original EDIFACT segment layout.

   Following the EDIFACT information, EANCOM® specific information is provided in the third, fourth, and fifth columns. In the third column a status indicator for the use of (C)onditional EDIFACT data elements (see 2.1 through 2.3 below), in the fourth column the restricted indicator (see point 3 on the following page), and in the fifth column notes and code values used for specific data elements in the message.

2.1 (M)andatory data elements in EDIFACT segments retain their status in EANCOM®.

2.2 Additionally, there are five types of status for data elements with a (C)onditional EDIFACT status, whether for simple, component or composite data elements. These are listed below and can be identified when relevant by the following abbreviations:

- REQUIRED	**R**	Indicates that the entity is required and must be sent.
- ADVISED	**A**	Indicates that the entity is advised or recommended.
- DEPENDENT	**D**	Indicates that the entity must be sent in certain conditions, as defined by the relevant explanatory note.
- OPTIONAL	**O**	Indicates that the entity is optional and may be sent at the discretion of the user.
- NOT USED	**N**	Indicates that the entity is not used and should be omitted.

2.3 If a composite is flagged as **N, NOT USED**, all data elements within that composite will have blank status indicators assigned to them.

3. Status indicators detailed in the fourth column which directly relate to the code values detailed in the fifth **column** may have two values:

- RESTRICTED	*****	A data element marked with an asterisk (*) in the fourth column indicates that the listed codes in column five are the only codes available for use with this data element, in this segment, in this message.
- OPEN		All data elements where coded representation of data is possible and a restricted set of code values is not indicated are open (no asterisk in fourth column). The available codes are listed in the EANCOM® Data Elements and Code Sets Directory. Code values may be given as examples or there may be a note on the format or type of code to be used.

4. Different colours are used for the code values in the segment details: restricted codes are in red and open codes in blue.

5. Segments Layout

Segment number: 1

UNA - C 1 - Service string advice					
Function: The service string advice shall begin with the upper case characters UNA immediately followed by six characters in the order shown below. The space character shall not be used in positions 010, 020, 040, 050 or 060. The same character shall not be used in more than one position of the UNA.					
		EDIFACT	GS1	*	Description
UNA1	Component data element separator	M an1	**M**	*	Used as a separator between component data elements contained within a composite data element (default value: ":")
UNA2	Data element separator	M an1	**M**	*	Used to separate two simple or composite data elements (default value: "+")
UNA3	Decimal mark	M an1	**M**	*	Used to indicate the character used for decimal notation (default value:".")
UNA4	Release character	M an1	**M**	*	Used to restore any service character to its original specification (value: "?").
UNA5	Repetition separator	M an1	**M**	*	Used to indicate the character used for repetition separation (value: " * ").
UNA6	Segment terminator	M an1	**M**	*	Used to indicate the end of segment data (default value: " ' ")
Segment Notes: This segment is used to inform the receiver of the interchange that a set of service string characters which are different to the default characters are being used. When using the default set of service characters, the UNA segment need not be sent. If it is sent, it must immediately precede the UNB segment and contain the four service string characters (positions UNA1, UNA2, UNA4 and UNA6) selected by the interchange sender. Regardless of whether or not all of the service string characters are being changed every data element within this segment must be filled, (i.e., if some default values are being used with user defined ones, both the default and user defined values must be specified). When expressing the service string characters in the UNA segment, it is not necessary to include any element separators. The use of the UNA segment is required when using a character set other than level A. UNA:+.?*'					

5. Segments Layout

Segment number: 2

UNB - M 1 - Interchange header

Function:

To identify an interchange.

Notes:
1. S001/0002, shall be '4' to indicate this version of the syntax.
2. The combination of the values carried in data elements S002, S003 and 0020 shall be used to identify uniquely the interchange, for the purpose of acknowledgement.

		EDIFACT	GS1	*	Description
S001	SYNTAX IDENTIFIER	M	**M**		See Part I chapter 5.2.7 and segment notes.
0001	Syntax identifier	M a4	**M**	*	UNOA = UN/ECE level A UNOB = UN/ECE level B UNOC = UN/ECE level C UNOD = UN/ECE level D UNOE = UN/ECE level E UNOF = UN/ECE level F UNOG = UN/ECE level G UNOH = UN/ECE level H UNOI = UN/ECE level I UNOJ = UN/ECE level J UNOK = UN/ECE level K UNOW = UN/ECE level W UNOX = UN/ECE level X UNOY = UN/ECE level Y
0002	Syntax version number	M an1	**M**	*	4 = Version 4
0080	Service code list directory version number	C an..6	**N**		
0133	Character encoding, coded	C an..3	**N**		
S002	INTERCHANGE SENDER	M	**M**		
0004	Interchange sender identification	M an..35	**M**		GLN (n13)
0007	Identification code qualifier	C an..4	**R**	*	14 = GS1
0008	Interchange sender internal identification	C an..35	**O**		
0042	Interchange sender internal sub-identification	C an..35	**N**		
S003	INTERCHANGE RECIPIENT	M	**M**		
0010	Interchange recipient identification	M an..35	**M**		GLN (n13)
0007	Identification code qualifier	C an..4	**R**	*	14 = GS1
0014	Interchange recipient internal identification	C an..35	**O**		
0046	Interchange recipient internal sub-identification	C an..35	**N**		
S004	DATE AND TIME OF PREPARATION	M	**M**		
0017	Date	M n8	**M**		CCYYMMDD
0019	Time	M n4	**M**		HHMM
0020	Interchange control reference	M an..14	**M**		Unique reference identifying the interchange. Created

5. Segments Layout

Segment number: 2

		EDIFACT	GS1	*	Description
					by the interchange sender.
S005	RECIPIENT REFERENCE/ PASSWORD DETAILS	C	**O**		
0022	Recipient reference/password	M an..14	**M**		
0025	Recipient reference/password qualifier	C an2	**O**		
0026	Application reference	C an..14	**O**		Message identification if the interchange contains only one type of message.
0029	Processing priority code	C a1	**O**		A = Highest priority
0031	Acknowledgement request	C n1	**O**		1 = Requested
0032	Interchange agreement identifier	C an..35	**O**	*	EANCOM.....
0035	Test indicator	C n1	**O**		1 = Interchange is a test

Segment Notes:

This segment is used to envelope the interchange, as well as to identify both, the party to whom the interchange is sent and the party who has sent the interchange. The principle of the UNB segment is the same as a physical envelope which covers one or more letters or documents, and which details, both the address where delivery is to take place and the address from where the envelope has come.
S001: The character encoding specified in basic code table of ISO/IEC 646 (7-bit coded character set for information interchange) shall be used for the interchange service string advice (if used) and up to and including the composite data element S001 'Syntax identifier' in the interchange header. The character repertoire used for the characters in an interchange shall be identified from the code value of data element 0001 in S001 'Syntax identifier' in the interchange header. The character repertoire identified does not apply to objects and/or encrypted data.
The default encoding technique for a particular repertoire shall be the encoding technique defined by its associated character set specification.
DE 0001: The recommended (default) character set for use in EANCOM® for international exchanges is character set A (UNOA). Should users wish to use character sets other than A, an agreement on which set to use should be reached on a bilateral basis before communications begin.
DE 0004, 0008, 0010 and 0014: Within EANCOM® the use of the Global Location Number (GLN) is recommended for the identification of the interchange sender and recipient.
DE 0008: Identification (e.g. a division) specified by the sender of the interchange, to be included if agreed, by the recipient in response interchanges, to facilitate internal routing.
DE 0014: The address for routing, provided beforehand by the interchange recipient, is used by the interchange sender to inform the recipient of the internal address, within the latter's systems, to which the interchange should be routed. It is recommended that the GLN be used for this purpose.
DE 0007: Identification (e.g. a division) specified by the recipient of the interchange, to be included if agreed, by the sender in response interchanges, to facilitate internal routing.
DE S004: The date and time specified in this composite should be the date and time at which the interchange sender prepared the interchange. This date and time may not necessarily be the same as the date and time of contained messages.
DE 0020: The interchange control reference number is generated by the interchange sender and is used to identify uniquely each interchange. Should the interchange sender wish to re-use interchange control reference numbers, it is recommended that each number be preserved for at least a period of three months before being re-used. In order to guarantee uniqueness, the interchange control reference number should always be linked to the interchange sender's identification (DE 0004).
DE S005: The use of passwords must first be agreed bilaterally by the parties exchanging the interchange.
DE 0026: This data element is used to identify the application, on the interchange recipient's system, to which the interchange is directed. This data element may only be used if the interchange contains only one type of message, (e.g. only invoices). The reference used in this data element is assigned by the interchange sender.
DE 0031: This data element is used to indicate whether an acknowledgement to the interchange is required. The EANCOM® APERAK or CONTRL message should be used to provide acknowledgement of interchange receipt. In addition, the EANCOM® CONTRL message may be used to indicate when an interchange has been rejected

5. Segments Layout

Segment number: 2

due to syntax errors.
DE 0032: This data element is used to identify any underlying agreements which control the exchange of data. Within EANCOM® , the identity of such agreements must start with the letters 'EANCOM', the remaining characters within the data element being filled according to bilateral agreements.

UNB+UNOC:4+5412345678908:14+8798765432106:14+20020102:1000+12345555+++++EANCOMREF 52'

5. Segments Layout

Segment number: 3

UNH - M 1 - Message header

Function:

To head, identify and specify a message.

Notes:
1. Data element S009/0057 is retained for upward compatibility. The use of S016 and/or S017 is encouraged in preference.
2. The combination of the values carried in data elements 0062 and S009 shall be used to identify uniquely the message within its group (if used) or if not used, within its interchange, for the purpose of acknowledgement.

		EDIFACT	GS1	*	Description
0062	Message reference number	M an..14	**M**		Senders unique message reference. Sequence number of the messages in the interchange. DE 0062 in the UNT will be identical. Sender generated.
S009	MESSAGE IDENTIFIER	M	**M**		
0065	Message type	M an..6	**M**	*	INVRPT = Inventory report message
0052	Message version number	M an..3	**M**	*	D = Draft version/UN/EDIFACT Directory
0054	Message release number	M an..3	**M**	*	01B = Release 2001 - B
0051	Controlling agency, coded	M an..3	**M**	*	UN = UN/CEFACT
0057	Association assigned code	C an..6	**R**	*	EAN007 = GS1 version control number (GS1 Permanent Code) Indicates that the message is the EANCOM version 007 of the UNSM Inventory Report.
0110	Code list directory version number	C an..6	**O**		This data element can be used to identify the codelist agreed by the interchange partners, e.g. EAN001 = EANCOM 2002 S4 codelist released on 01.12.2002 by GS1.
0113	Message type sub-function identification	C an..6	**N**		
0068	Common access reference	C an..35	**N**		
S010	STATUS OF THE TRANSFER	C	**N**		
0070	Sequence of transfers	M n..2			
0073	First and last transfer	C a1			
S016	MESSAGE SUBSET IDENTIFICATION	C	**N**		
0115	Message subset identification	M an..14			
0116	Message subset version number	C an..3			
0118	Message subset release number	C an..3			
0051	Controlling agency, coded	C an..3			
S017	MESSAGE IMPLEMENTATION GUIDELINE IDENTIFICATION	C	**N**		
0121	Message implementation guideline identification	M an..14			
0122	Message implementation guideline version number	C an..3			
0124	Message implementation	C an..3			

5. Segments Layout

Segment number: 3

		EDIFACT	GS1	*	Description
	guideline release number				
0051	Controlling agency, coded	C an..3			
S018	SCENARIO IDENTIFICATION	C	**N**		
0127	Scenario identification	M an..14			
0128	Scenario version number	C an..3			
0130	Scenario release number	C an..3			
0051	Controlling agency, coded	C an..3			

Segment Notes:

This segment is used to head, identify and specify a message.
DE's 0065, 0052, 0054, and 0051: Indicate that the message is a UNSM Inventory Report based on the D.01B directory under the control of the United Nations.

Example:
UNH+ME000001+INVRPT:D:01B:UN:EAN007'

5. Segments Layout

Segment number: 4

BGM	- M	1 - Beginning of message			
Function: To indicate the type and function of a message and to transmit the identifying number.					
		EDIFACT	GS1	*	Description
C002	DOCUMENT/MESSAGE NAME	C	**R**		
1001	Document name code	C an..3	**R**	*	35 = Inventory report 78 = Inventory movement advice 172 = Authorisation to plan and suggest orders 173 = Authorisation to plan and ship orders 263 = Inventory adjustment status report Code value 35 is used to report on the actual inventory held at the time the report is produced. Code value 78 is used to identify movements to and from inventory during the validity period defined.
1131	Code list identification code	C an..17	**N**		
3055	Code list responsible agency code	C an..3	**N**		
1000	Document name	C an..35	**O**		
C106	DOCUMENT/MESSAGE IDENTIFICATION	C	**R**		
1004	Document identifier	C an..35	**R**		Inventory Report number assigned by the document sender. For global unique identification of documents Global Document Type Identifier (GDTI) is available.
1056	Version identifier	C an..9	**N**		
1060	Revision identifier	C an..6	**N**		
1225	Message function code	C an..3	**R**	*	7 = Duplicate 9 = Original 31 = Copy The message function, coded is a critical data element in this segment. It applies to all data indicated in the message. The following definition apply for the restricted code: 7 = Duplicate - Re-transmission involving the same parties, on the specific request of the receiver. 9 = Original - An original transmission of an inventory report. 31 = Copy - A copy of an inventory report for a third party for information purposes.
4343	Response type code	C an..3	**N**		
Segment Notes: This segment is used to indicate the type and function of a message and to transmit the identifying number. All references other than the document number DE 1004 are to be put in the RFF segment. Example: BGM+35+INVR21599+9'					

5. Segments Layout

Segment number: 5

DTM - M 10 - Date/time/period					
Function: To specify date, and/or time, or period.					
		EDIFACT	GS1	*	Description
C507	DATE/TIME/PERIOD	M	**M**		
2005	Date or time or period function code qualifier	M an..3	**M**	*	137 = Document/message date/time 194 = Start date/time 206 = End date/time 273 = Validity period 366 = Inventory report date
2380	Date or time or period value	C an..35	**R**		
2379	Date or time or period format code	C an..3	**R**		102 = CCYYMMDD 718 = CCYYMMDD-CCYYMMDD

Segment Notes:

This segment is used to specify any dates relevant to the complete Inventory Report.
DE 2005: Identification of the 'Document/message date/time' (code value 137) is mandatory in an EANCOM message.

Example:
DTM+137:20021101:102'

5. Segments Layout

Segment number: 6

SG1	- C	10 -	RFF-DTM
RFF	- M	1 -	Reference

Function:

To specify a reference.

		EDIFACT	GS1	*	Description
C506	REFERENCE	M	**M**		
1153	Reference code qualifier	M an..3	**M**		AVD = Inventory report request number CR = Customer reference number CT = Contract number
1154	Reference identifier	C an..70	**R**		
1156	Document line identifier	C an..6	**N**		
4000	Reference version identifier	C an..35	**N**		
1060	Revision identifier	C an..6	**N**		

Segment Notes:

This segment is used to provide references for the entire message.
All references should normally be given within this segment if they apply to the whole transaction.

Example:
RFF+CT:566241'

5. Segments Layout

Segment number: 7

SG1	- C	10	-	RFF-DTM
DTM	- C	1	-	Date/time/period

Function:

To specify date, and/or time, or period.

		EDIFACT	GS1	*	Description
C507	DATE/TIME/PERIOD	M	**M**		
2005	Date or time or period function code qualifier	M an..3	**M**	*	171 = Reference date/time
2380	Date or time or period value	C an..35	**R**		
2379	Date or time or period format code	C an..3	**R**		102 = CCYYMMDD 718 = CCYYMMDD-CCYYMMDD

Segment Notes:

This segment is used to specify dates or periods relating to the references given in the previous RFF segment.

Example:
DTM+171:20021001:102'

5. Segments Layout

Segment number: 8

SG2	- C	20 -	NAD-SG3-SG4
NAD	- M	1 -	Name and address

Function:

To specify the name/address and their related function, either by C082 only and/or unstructured by C058 or structured by C080 thru 3207.

		EDIFACT	GS1	*	Description
3035	Party function code qualifier	M an..3	**M**		BY = Buyer CO = Corporate office DEQ = Shipper GO = Goods owner GY = Inventory reporting party MF = Manufacturer of goods PO = Ordering party SU = Supplier WH = Warehouse keeper
C082	PARTY IDENTIFICATION DETAILS	C	**A**		
3039	Party identifier	M an..35	**M**		For identification of parties it is recommended to use GLN - Format n13.
1131	Code list identification code	C an..17	**N**		
3055	Code list responsible agency code	C an..3	**R**	*	9 = GS1
C058	NAME AND ADDRESS	C	**O**		This composite may only be used to fulfill the requirements of directive 2003/58/EC, article 4.
3124	Name and address description	M an..35	**M**		
3124	Name and address description	C an..35	**O**		
3124	Name and address description	C an..35	**O**		
3124	Name and address description	C an..35	**O**		
3124	Name and address description	C an..35	**O**		
C080	PARTY NAME	C	**D**		
3036	Party name	M an..35	**M**		Party Name in clear text.
3036	Party name	C an..35	**O**		
3036	Party name	C an..35	**O**		
3036	Party name	C an..35	**O**		
3036	Party name	C an..35	**O**		
3045	Party name format code	C an..3	**O**		
C059	STREET	C	**D**		
3042	Street and number or post office box identifier	M an..35	**M**		Building Name/Number and Street
3042	Street and number or post office box identifier	C an..35	**O**		Name and/or P.O. Box
3042	Street and number or post office box identifier	C an..35	**O**		
3042	Street and number or post office box identifier	C an..35	**O**		
3164	City name	C an..35	**D**		City/Town, clear text.

5. Segments Layout

Segment number: 8

		EDIFACT	GS1	*	Description
C819	COUNTRY SUB-ENTITY DETAILS	C	**D**		
3229	Country sub-entity name code	C an..9	**O**		
1131	Code list identification code	C an..17	**O**		
3055	Code list responsible agency code	C an..3	**O**		
3228	Country sub-entity name	C an..70	**O**		County/State, clear text.
3251	Postal identification code	C an..17	**D**		Postal Code
3207	Country name code	C an..3	**D**		ISO 3166 two alpha code

Segment Notes:

This segment is used to identify the trading partners involved in the Inventory Report message. Identification of the parties exchanging the message is mandatory in EANCOM.
If not all the goods are owned by the same party, the goods owner should be identified at the line item level and must not appear here.

Example:
NAD+MF+5412345000013::9'
NAD+BY+5412345000020::9'

Dependency Notes:
The following composites and data elements are only used when a coded name and address can not be used.
The affected composites and data elements are as follows:
C080 - C059 - 3164 - C819 - 3251 - 3207

5. Segments Layout

Segment number: 9

SG2	- C	20 -	NAD-SG3-SG4
SG3	- C	99 -	RFF
RFF	- M	1 -	Reference

Function:

To specify a reference.

		EDIFACT	GS1	*	Description
C506	REFERENCE	M	**M**		
1153	Reference code qualifier	M an..3	**M**		FC = Fiscal number GN = Government reference number VA = VAT registration number YC1 = Additional party identification (GS1 Temporary Code)
1154	Reference identifier	C an..70	**R**		
1156	Document line identifier	C an..6	**N**		
4000	Reference version identifier	C an..35	**N**		
1060	Revision identifier	C an..6	**N**		

Segment Notes:

This segment is used to specify any references related to the party identified in the previous NAD segment.

Example:
RFF+VA:544211'

5. Segments Layout

Segment number: 10

SG2	- C	20 -	NAD-SG3-SG4
SG4	- C	10 -	CTA-COM
CTA	- M	1 -	Contact information

Function:

To identify a person or a department to whom communication should be directed.

		EDIFACT	GS1	*	Description
3139	Contact function code	C an..3	**R**		IC = Information contact
C056	DEPARTMENT OR EMPLOYEE DETAILS	C	**O**		
3413	Department or employee name code	C an..17	**O**		
3412	Department or employee name	C an..35	**O**		

Segment Notes:

This segment is used to identify the contact name or department within the party specified in the NAD segment. The global location code is particularly suitable for this purpose.

Example:
CTA+IC+:M JOHNSON'

5. Segments Layout

Segment number: 11

SG2	- C	20 -	NAD-SG3-SG4
SG4	- C	10 -	CTA-COM
COM	- C	5 -	Communication contact

Function:

To identify a communication number of a department or a person to whom communication should be directed.

		EDIFACT	GS1	*	Description
C076	COMMUNICATION CONTACT	M	**M**		
3148	Communication address identifier	M an..512	**M**		
3155	Communication address code qualifier	M an..3	**M**		EM = Electronic mail TE = Telephone AO = Uniform Resource Location (URL)

Segment Notes:

This segment identifies the communications number, and type of communications, for the person or department identified in the preceding CTA segment.

Example:
COM+00445221556:TE'

5. Segments Layout

Segment number: 12

SG5	- C	5 -	CUX-DTM
CUX	- M	1 -	Currencies

Function:

To specify currencies used in the transaction and relevant details for the rate of exchange.

		EDIFACT	GS1	*	Description
C504	CURRENCY DETAILS	C	**R**		
6347	Currency usage code qualifier	M an..3	**M**	*	2 = Reference currency
6345	Currency identification code	C an..3	**R**		ISO 4217 3 alpha
6343	Currency type code qualifier	C an..3	**R**		10 = Pricing currency 11 = Payment currency
6348	Currency rate value	C n..4	**N**		
C504	CURRENCY DETAILS	C	**D**		The second occurrence of this composite is only used if a target currency is being specified.
6347	Currency usage code qualifier	M an..3	**M**	*	3 = Target currency
6345	Currency identification code	C an..3	**R**		ISO 4217 3 alpha
6343	Currency type code qualifier	C an..3	**R**		10 = Pricing currency 11 = Payment currency
6348	Currency rate value	C n..4	**O**		
5402	Currency exchange rate	C n..12	**D**		The rate of exchange which applies to the currency. This rate of exchange is only used if a target currency has been identified in the second occurrence of C504.
6341	Exchange rate currency market identifier	C an..3	**N**		

Segment Notes:

This segment is used to specify the currencies in which prices in the Inventory Report are quoted.
The CUX segment is mandatory for international exchanges when valuing inventories.
When specifying reference and target currencies for international trade, one occurrence of CUX is all that is required. The reference currency is identified in the first occurrence of the composite C504, with the target currency specified in the second occurrence of C504. The rate of exchange between the two is detailed in DE 5402.
The general rule for calculating the rate of exchange is as follows:
Reference Currency multiplied by Rate of Exchange = Target Currency.

Example:
CUX+2:EUR:10'

CUX+2:EUR:10+3:USD:11+0.90243'

5. Segments Layout

Segment number: 13

SG5	- C	5 -	CUX-DTM
DTM	- C	1 -	Date/time/period

Function:

To specify date, and/or time, or period.

		EDIFACT	GS1	*	Description
C507	DATE/TIME/PERIOD	M	**M**		
2005	Date or time or period function code qualifier	M an..3	**M**	*	134 = Rate of exchange date/time 194 = Start date/time 206 = End date/time
2380	Date or time or period value	C an..35	**R**		
2379	Date or time or period format code	C an..3	**R**		102 = CCYYMMDD 718 = CCYYMMDD-CCYYMMDD

Segment Notes:

This segment is used to specify any dates related to the previous CUX segment.

Example:
DTM+134:20021001:102'

5. Segments Layout

Segment number: 14

SG9	- C	9999999	-	LIN-PIA-IMD-ALI-SG11
LIN	- M	1	-	Line item

Function:

To identify a line item and configuration.

		EDIFACT	GS1	*	Description
1082	Line item identifier	C an..6	**R**		Application generated number of the count of the item lines within the Inventory Report.
1229	Action request/notification description code	C an..3	**N**		
C212	ITEM NUMBER IDENTIFICATION	C	**D**		This composite is only used for the identification of GS1 codes. If another coding structure is required, e. g. HIBC, this composite will not be used and the code will be detailed in the PIA segment.
7140	Item identifier	C an..35	**R**		Format n..14 GTIN - this is the number of the article being reported.
7143	Item type identification code	C an..3	**R**	*	SRV = GS1 Global Trade Item Number
1131	Code list identification code	C an..17	**N**		
3055	Code list responsible agency code	C an..3	**N**		
C829	SUB-LINE INFORMATION	C	**D**		
5495	Sub-line indicator code	C an..3	**R**	*	1 = Sub-line information
1082	Line item identifier	C an..6	**R**		
1222	Configuration level number	C n..2	**N**		
7083	Configuration operation code	C an..3	**N**		

Segment Notes:

This segment is used to identify a specific line item in the inventory report.
If Global Trade Item Numbers are available it is mandatory to use GTIN within the LIN segment.

The detail section of the Inventory Report is formed by a repeating group of segments, always starting with the LIN segment.

In a simple Inventory Report covering one location, the LIN segment will contain the product identification with related stock quantities specified using only the INV, QTY and LOC segments in segment group 11.

In an extended Inventory Report covering multiple locations, an available option is to provide total stock quantities for all locations using the QTY and LOC segments in segment group 11, with the quantities per location further broken down using the full range of segments available in segment group 11.

Note on DE 1082:
Numbering rule: In Part I, section 4.10 there is the recommendation “Within EANCOM® it is recommended that the line numbers used in the first occurrence of data element 1082 in the LIN segment be sequential, starting at 1 for each new message.”

Note on DE 7140:
Only the following significant digits are possible:
- 8 digits for GTIN 8 codes
- 12 digits for GTIN 12 codes
- 13 digits for GTIN 13 codes
- 14 digits for GTIN 14 codes

Dependency Note:

5. Segments Layout

Segment number: 14

C829 is only used when sub-lines are required.
FOR A COMPLETE DESCRIPTION ON THE USAGE OF SUB-LINES PLEASE REFER TO PART I, SECTION 4.10.

Example:
LIN+1++5412345111115:SRV'

5. Segments Layout

Segment number: 15

SG9	- C	9999999	- LIN-PIA-IMD-ALI-SG11
PIA	- C	10	- Additional product id

Function:
To specify additional or substitutional item identification codes.

		EDIFACT	GS1	*	Description
4347	Product identifier code qualifier	M an..3	**M**	*	1 = Additional identification 4 = Substituted for 5 = Product identification Product Id function coded has the following restricted coded function: 1 = Additional Identification - To provide an additional identity for the product identified in the LIN segment. The additional identification can consist of : A supplemental identification which provides more information complementary to the main GTIN provided in the LIN segment, e.g. a batch number, promotional variant number, product group number, etc. An alternative identification which may be used instead of the main GTIN provided in the LIN segment, e.g. a buyer's article number, an HIBC code, etc. 4 = Substituted for - The given item number is the number of the original product substituted for another identified in the LIN segment. 5 - Product Identification - To provide the primary product identification code when no GTIN has been provided in the LIN segment.
C212	ITEM NUMBER IDENTIFICATION	M	**M**		
7140	Item identifier	C an..35	**R**		
7143	Item type identification code	C an..3	**R**		HS = Harmonised system IN = Buyer's item number PV = Promotional variant number SA = Supplier's article number SRV = GS1 Global Trade Item Number
1131	Code list identification code	C an..17	**O**		
3055	Code list responsible agency code	C an..3	**D**		9 = GS1 91 = Assigned by supplier or supplier's agent 92 = Assigned by buyer or buyer's agent
C212	ITEM NUMBER IDENTIFICATION	C	**O**		
7140	Item identifier	C an..35	**R**		
7143	Item type identification code	C an..3	**R**		
1131	Code list identification code	C an..17	**O**		
3055	Code list responsible agency code	C an..3	**D**		
C212	ITEM NUMBER IDENTIFICATION	C	**O**		
7140	Item identifier	C an..35	**R**		
7143	Item type identification code	C an..3	**R**		

5. Segments Layout

Segment number: 15

		EDIFACT	GS1	*	Description
1131	Code list identification code	C an..17	**O**		
3055	Code list responsible agency code	C an..3	**D**		
C212	ITEM NUMBER IDENTIFICATION	C	**O**		
7140	Item identifier	C an..35	**R**		
7143	Item type identification code	C an..3	**R**		
1131	Code list identification code	C an..17	**O**		
3055	Code list responsible agency code	C an..3	**D**		
C212	ITEM NUMBER IDENTIFICATION	C	**O**		
7140	Item identifier	C an..35	**R**		
7143	Item type identification code	C an..3	**R**		
1131	Code list identification code	C an..17	**O**		
3055	Code list responsible agency code	C an..3	**D**		

Segment Notes:

This segment is used to specify additional item identification codes such as a buyer's or supplier's item number.

Examples:
PIA+1+ABC5343:IN'
In this example the PIA segment is used to provide an additional identification to the GTIN provided in the LIN segment. The GTIN 4000862141404 provided in the LIN segment refers to the internal buyer's item number ABC5343.

PIA+4+5412345123095:SRV'
In this example the PIA segment is used to provide the article number of the product which has been substituted by the former promary GS1 article number. The new GS1 5412345111184 would be included in the message in the LIN segment.

PIA+5+2209953C001L:AC'
This example details the HIBC code 2209953C001L which is provided as the primary product code because no GTIN was provided in the LIN segment.

5. Segments Layout

Segment number: 16

SG9	- C	9999999	- LIN-PIA-IMD-ALI-SG11
IMD	- C	10	- Item description

Function:

To describe an item in either an industry or free format.

		EDIFACT	GS1	*	Description
7077	Description format code	C an..3	**O**	*	C = Code (from industry code list) F = Free-form S = Structured (from industry code list) B = Code and text
C272	ITEM CHARACTERISTIC	C	**O**		
7081	Item characteristic code	C an..3	**R**		13 = Quality 35 = Colour
1131	Code list identification code	C an..17	**O**		
3055	Code list responsible agency code	C an..3	**D**	*	9 = GS1 Must be used if DE7081 contains an GS1 code.
C273	ITEM DESCRIPTION	C	**A**		
7009	Item description code	C an..17	**O**		CU = Consumer unit (GS1 Permanent Code) DU = Despatch unit (GS1 Permanent Code) TU = Traded unit (GS1 Permanent Code) VQ = Variable quantity product (GS1 Permanent Code)
1131	Code list identification code	C an..17	**O**		
3055	Code list responsible agency code	C an..3	**D**		9 = GS1
7008	Item description	C an..256	**O**		
7008	Item description	C an..256	**O**		
3453	Language name code	C an..3	**O**		
7383	Surface or layer code	C an..3	**N**		

Segment Notes:

This segment is used to describe the current line item.
It is recommended that this segment only be used for coded descriptions. Data element 7008 in clear text should only be used when no product code is available or when free-form descriptions are required by the trading partners.

Example:
IMD+C++CU::9'
IMD+F++:::CORN FRUIT CRUNCHIES:CASE'

5. Segments Layout

Segment number: 17

SG9	- C	9999999	- LIN-PIA-IMD-ALI-SG11
ALI	- C	10	- Additional information

Function:

To indicate that special conditions due to the origin, customs preference, fiscal or commercial factors are applicable.

		EDIFACT	GS1	*	Description
3239	Country of origin name code	C an..3	**N**		
9213	Duty regime type code	C an..3	**N**		
4183	Special condition code	C an..3	**R**		130 = Discontinued 175 = Suspended 176 = No re-ordering
4183	Special condition code	C an..3	**O**		
4183	Special condition code	C an..3	**O**		
4183	Special condition code	C an..3	**O**		
4183	Special condition code	C an..3	**O**		

Segment Notes:

This segment is used to specify any additional information related to the current line item.

Example:
ALI+++130'

5. Segments Layout

Segment number: 18

SG9	- C	9999999	-	LIN-PIA-IMD-ALI-SG11
SG11	- C	9999	-	INV-QTY-GIN-LOC-DTM-STS-SG12-SG13-SG14-SG15
INV	- M	1	-	Inventory management related details

Function:

To provide the different information related to the inventory management functions and needed to process properly the inventory movements and the inventory balances.

		EDIFACT	GS1	*	Description
4501	Inventory movement direction code	C an..3	**D**		1 = Movement out of inventory 2 = Movement into inventory
7491	Inventory type code	C an..3	**O**		
4499	Inventory movement reason code	C an..3	**N**		
4503	Inventory balance method code	C an..3	**D**		1 = Book-keeping inventory balance 2 = Formal inventory balance
C522	INSTRUCTION	C	**N**		
4403	Instruction type code qualifier	M an..3			
4401	Instruction description code	C an..3			
1131	Code list identification code	C an..17			
3055	Code list responsible agency code	C an..3			
4400	Instruction description	C an..35			

Segment Notes:

This segment is used to identify the inventory movement direction.

Example:
INV+1'
Use DE4501 (code value 1 and 2) for movements and DE 4503 code value (1 and 2) for snapshot.

5. Segments Layout

Segment number: 19

SG9	- C	9999999	-	LIN-PIA-IMD-ALI-SG11
SG11	- C	9999	-	INV-QTY-GIN-LOC-DTM-STS-SG12-SG13-SG14-SG15
QTY	- M	1	-	Quantity

Function:

To specify a pertinent quantity.

		EDIFACT	GS1	*	Description
C186	QUANTITY DETAILS	M	**M**		
6063	Quantity type code qualifier	M an..3	**M**		26 = Promotion quantity 66 = Committed quantity 81 = Extra unplanned delivery 89 = Quality control held 96 = Quality control failed 97 = Minimum inventory 98 = Maximum inventory 124 = Damaged goods 145 = Actual stock 146 = Model or target stock 157 = Opening stock balance quantity 197 = Reordering level 198 = Quantity in transit 199 = Inventory withdrawal quantity 212 = Quantity sold, net 249 = Quantity displayed not available for sale 257 = Quantity in physical inventory 447 = Quantity moved between outlets 452 = En route to warehouse quantity 453 = En route from warehouse quantity 454 = Quantity ordered but not yet allocated from stock 455 = Not yet ordered quantity 457 = Maximum number of units per shelf 503 = Quantity to be checked 32E = Consolidated discount stock (GS1 Temporary Code) 93E = Extraordinary sale (GS1 Temporary Code) X20 = Reserved quantity, provisional (GS1 Temporary Code) X22 = Consignment stock, available on ordering (GS1 Temporary Code) X23 = Consignment stock, available on agreement (GS1 Temporary Code) X24 = Consignment stock, available at due date (GS1 Temporary Code)
6060	Quantity	M an..35	**M**		
6411	Measurement unit code	C an..3	**D**		This DE is only used if the current line item is a variable quantity product.

Segment Notes:

This segment is used to express the quantities related to the current line item.

Example:
QTY+145:148'

5. Segments Layout

Segment number: 20

SG9	- C	9999999	- LIN-PIA-IMD-ALI-SG11
SG11	- C	9999	- INV-QTY-GIN-LOC-DTM-STS-SG12-SG13-SG14-SG15
GIN	- C	9999	- Goods identity number

Function:

To give specific identification numbers, either as single numbers or ranges.

		EDIFACT	GS1	*	Description
7405	Object identification code qualifier	M an..3	**M**	*	BN = Serial number BX = Batch number
C208	IDENTITY NUMBER RANGE	M	**M**		
7402	Object identifier	M an..35	**M**		
7402	Object identifier	C an..35	**O**		
C208	IDENTITY NUMBER RANGE	C	**O**		
7402	Object identifier	M an..35	**M**		
7402	Object identifier	C an..35	**O**		
C208	IDENTITY NUMBER RANGE	C	**O**		
7402	Object identifier	M an..35	**M**		
7402	Object identifier	C an..35	**O**		
C208	IDENTITY NUMBER RANGE	C	**O**		
7402	Object identifier	M an..35	**M**		
7402	Object identifier	C an..35	**O**		
C208	IDENTITY NUMBER RANGE	C	**O**		
7402	Object identifier	M an..35	**M**		
7402	Object identifier	C an..35	**O**		

Segment Notes:

This segment is used to provide additional identification numbers relevant to the line item identified in the LIN segment and specific to the quantities reported in the QTY segment.
GS1 Serial Shipping Container Codes (SSCC) are provided in the GIN segment in the CPS segment group.
DE C208: If multiple, non-consecutive identification numbers are provided, then each of them is placed in the first DE 7402 of C208. If a range of consecutive identification numbers is provided, then the first number in that range is placed alone in the first DE 7402 of C208, and the last number in that range is placed alone in the second DE 7402 for that particular C208.

Example:
GIN+BX+456:500'
This example defines a range of batch numbers from 456 to 500 inclusive.

5. Segments Layout

Segment number: 21

SG9	- C	9999999 -	LIN-PIA-IMD-ALI-SG11
SG11	- C	9999 -	INV-QTY-GIN-LOC-DTM-STS-SG12-SG13-SG14-SG15
LOC	- C	5 -	Place/location identification

Function:

To identify a place or a location and/or related locations.

		EDIFACT	GS1	*	Description
3227	Location function code qualifier	M an..3	**M**		14 = Location of goods 18 = Warehouse 19 = Factory/plant
C517	LOCATION IDENTIFICATION	C	**A**		
3225	Location name code	C an..25	**A**		GLN - Format n13
1131	Code list identification code	C an..17	**O**		
3055	Code list responsible agency code	C an..3	**D**		9 = GS1 DE 3055 must be used if DE 3225 is used and does not contain an UN/LOCODE.
3224	Location name	C an..256	**O**		
C519	RELATED LOCATION ONE IDENTIFICATION	C	**O**		
3223	First related location name code	C an..25	**R**		Specify the ultimate inventory location, e.g., a specific point within a factory. Global Location Number GLN - Format n13
1131	Code list identification code	C an..17	**O**		
3055	Code list responsible agency code	C an..3	**D**		9 = GS1 DE 3055 must be used if DE 3223 is used and does not contain an UN/LOCODE.
3222	First related location name	C an..70	**O**		
C553	RELATED LOCATION TWO IDENTIFICATION	C	**O**		
3233	Second related location name code	C an..25	**R**		Global Location Number GLN - Format n13
1131	Code list identification code	C an..17	**O**		
3055	Code list responsible agency code	C an..3	**D**		9 = GS1 DE 3055 must be used if DE 3233 is used and does not contain an UN/LOCODE.
3232	Second related location name	C an..70	**O**		
5479	Relation code	C an..3	**N**		

Segment Notes:

This segment is used to identify the location of inventoried goods or the delivery location specific to the quantity reported in the QTY segment.
When identifying locations it is recommended to use Global Location Number GLN.

Example:
LOC+18+5412345000013::9'

5. Segments Layout

Segment number: 22

SG9	- C	9999999	-	LIN-PIA-IMD-ALI-SG11
SG11	- C	9999	-	INV-QTY-GIN-LOC-DTM-STS-SG12-SG13-SG14-SG15
DTM	- C	5	-	Date/time/period

Function:

To specify date, and/or time, or period.

		EDIFACT	GS1	*	Description
C507	DATE/TIME/PERIOD	M	**M**		
2005	Date or time or period function code qualifier	M an..3	**M**		36 = Expiry date 94 = Production/manufacture date 194 = Start date/time 206 = End date/time 273 = Validity period 360 = Sell by date 361 = Best before date 363 = Total shelf life period 366 = Inventory report date 750 = Before date 751 = After date 805 = Stock demand cover period, expected
2380	Date or time or period value	C an..35	**R**		
2379	Date or time or period format code	C an..3	**R**		102 = CCYYMMDD 203 = CCYYMMDDHHMM

Segment Notes:

This segment is used to specify dates relevant to the quantity (or sub-quantity) specified in the QTY segment for the current line item.
In the extended Inventory Report this DTM segment may be used to indicate the inventory report date for the sub-quantity and location identified in the QTY and LOC segments respectively.

Example:
DTM+94:20020601:102'

5. Segments Layout

Segment number: 23

SG9	- C	9999999	-	LIN-PIA-IMD-ALI-SG11
SG11	- C	9999	-	INV-QTY-GIN-LOC-DTM-STS-SG12-SG13-SG14-SG15
STS	- C	9	-	Status

Function:

To specify the status of an object or service, including its category and the reason(s) for the status.

		EDIFACT	GS1	*	Description
C601	STATUS CATEGORY	C	**O**		
9015	Status category code	M an..3	**M**		6 = Activity code list (GS1 Temporary Code) 7 = Status code list (GS1 Temporary Code) 2 = Order administration
1131	Code list identification code	C an..17	**N**		
3055	Code list responsible agency code	C an..3	**D**	*	9 = GS1
C555	STATUS	C	**O**		
4405	Status description code	M an..3	**M**		14 = Process, completed 21 = Delivery, completed 27 = Despatch, completed 117 = Washed 118 = Unwashed 20E = Direct deliver (GS1 Temporary Code) 21E = Delivery through warehouse (GS1 Temporary Code) 22E = Despatched urgent (GS1 Temporary Code) 23E = Delivered cash on delivery (GS1 Temporary Code) 76E = Not collected (GS1 Temporary Code) X38 = In use (GS1 Temporary Code) X40 = Available (GS1 Temporary Code) X41 = Not available (GS1 Temporary Code)
1131	Code list identification code	C an..17	**N**		
3055	Code list responsible agency code	C an..3	**D**	*	9 = GS1
4404	Status description	C an..35	**N**		
C556	STATUS REASON	C	**O**		
9013	Status reason description code	M an..3	**M**		69 = Undefined incident attributed to carrier 88 = Accident involving means of transport
1131	Code list identification code	C an..17	**N**		
3055	Code list responsible agency code	C an..3	**D**	*	9 = GS1
9012	Status reason description	C an..256	**O**		
C556	STATUS REASON	C	**O**		
9013	Status reason description code	M an..3	**M**		
1131	Code list identification code	C an..17	**N**		
3055	Code list responsible agency code	C an..3	**D**	*	9 = GS1
9012	Status reason description	C an..256	**O**		

5. Segments Layout

Segment number: 23

		EDIFACT	GS1	*	Description
C556	STATUS REASON	C	**O**		
9013	Status reason description code	M an..3	**M**		
1131	Code list identification code	C an..17	**N**		
3055	Code list responsible agency code	C an..3	**D**	*	9 = GS1
9012	Status reason description	C an..256	**O**		
C556	STATUS REASON	C	**O**		
9013	Status reason description code	M an..3	**M**		
1131	Code list identification code	C an..17	**N**		
3055	Code list responsible agency code	C an..3	**D**	*	9 = GS1
9012	Status reason description	C an..256	**O**		
C556	STATUS REASON	C	**O**		
9013	Status reason description code	M an..3	**M**		
1131	Code list identification code	C an..17	**N**		
3055	Code list responsible agency code	C an..3	**D**	*	9 = GS1
9012	Status reason description	C an..256	**O**		

Segment Notes:

This segment is used to provide status information related to the current line item.

Example:
STS+2+64+29E::9'
The purchase order was cancelled because partial delivery is not allowed.

STS+2+64+27'
The purchase order has been despatched.

Dependency Notes:
DE 3055: This data element is only used when GS1 code values are being used in data element 9015, 4405 or 9013.
DE 9012: This data element is not generally recommended because all text provided here will have to be manually processed.

5. Segments Layout

Segment number: 24

SG9	- C	9999999	-	LIN-PIA-IMD-ALI-SG11
SG11	- C	9999	-	INV-QTY-GIN-LOC-DTM-STS-SG12-SG13-SG14-SG15
SG12	- C	5	-	NAD
NAD	- M	1	-	Name and address

Function:

To specify the name/address and their related function, either by C082 only and/or unstructured by C058 or structured by C080 thru 3207.

		EDIFACT	GS1	*	Description
3035	Party function code qualifier	M an..3	**M**	*	GO = Goods owner
C082	PARTY IDENTIFICATION DETAILS	C	**A**		
3039	Party identifier	M an..35	**M**		For identification of parties it is recommended to use GLN - Format n13.
1131	Code list identification code	C an..17	**N**		
3055	Code list responsible agency code	C an..3	**R**	*	9 = GS1
C058	NAME AND ADDRESS	C	**O**		This composite may only be used to fulfill the requirements of directive 2003/58/EC, article 4.
3124	Name and address description	M an..35	**M**		
3124	Name and address description	C an..35	**O**		
3124	Name and address description	C an..35	**O**		
3124	Name and address description	C an..35	**O**		
3124	Name and address description	C an..35	**O**		
C080	PARTY NAME	C	**D**		
3036	Party name	M an..35	**M**		Party Name in clear text.
3036	Party name	C an..35	**O**		
3036	Party name	C an..35	**O**		
3036	Party name	C an..35	**O**		
3036	Party name	C an..35	**O**		
3045	Party name format code	C an..3	**O**		
C059	STREET	C	**D**		
3042	Street and number or post office box identifier	M an..35	**M**		Building Name/Number and Street
3042	Street and number or post office box identifier	C an..35	**O**		Name and/or P.O. Box
3042	Street and number or post office box identifier	C an..35	**O**		
3042	Street and number or post office box identifier	C an..35	**O**		
3164	City name	C an..35	**D**		City/Town, clear text.
C819	COUNTRY SUB-ENTITY DETAILS	C	**D**		
3229	Country sub-entity name code	C an..9	**O**		
1131	Code list identification code	C an..17	**O**		

5. Segments Layout

Segment number: 24

		EDIFACT	GS1	*	Description
3055	Code list responsible agency code	C an..3	**O**		
3228	Country sub-entity name	C an..70	**O**		County/State, clear text.
3251	Postal identification code	C an..17	**D**		Postal Code
3207	Country name code	C an..3	**D**		ISO 3166 two alpha code

Segment Notes:

To specify the name/address and their related function, either by CO82 only and/or structured by CO80 thru 3207. This segment is used to identify the goods owner related to the current line item in case that not all line items are owned by the same party. If identified here, no goods owner must appear at the header level as the NAD segment in SG 12 should not be used to override the NAD segment in SG 2.

Example:
NAD+GO+5412345000013::9'

Dependency Notes:
The following composites and data elements are only used when a coded name and address can not be used. The affected composites and data elements are as follows:
C080 - C059 - 3164 - C819 - 3251 - 3207

5. Segments Layout

Segment number: 25

SG9	- C	9999999	-	LIN-PIA-IMD-ALI-SG11
SG11	- C	9999	-	INV-QTY-GIN-LOC-DTM-STS-SG12-SG13-SG14-SG15
SG13	- C	5	-	PRI
PRI	- M	1	-	Price details

Function:

To specify price information.

		EDIFACT	GS1	*	Description
C509	PRICE INFORMATION	C	**R**		
5125	Price code qualifier	M an..3	**M**		AAB = Calculation gross AAE = Information price, excluding allowances or charges, including taxes AAF = Information price, excluding allowances or charges and taxes
5118	Price amount	C n..15	**R**		
5375	Price type code	C an..3	**O**		CA = Catalogue CT = Contract
5387	Price specification code	C an..3	**O**		RTP = Retail price SRP = Suggested retail price
5284	Unit price basis value	C n..9	**D**		
6411	Measurement unit code	C an..3	**D**		
5213	Sub-line item price change operation code	C an..3	**N**		

Segment Notes:

The segment is used to specify the price information for the current line item.

Example:
PRI+AAB:650:CA:RTP'

Dependency Notes:
Data elements 5284 and 6411 are used when a product is a variable quantity product, e.g. price per 200 kilos, or when the unit of measure for purchasing, delivery, and invoicing are different for a product, e.g. sugar is not a variable quantity product but ordered and delivered in packs, and invoiced in kilos or tonnes.

5. Segments Layout

Segment number: 26

SG9	- C	9999999	-	LIN-PIA-IMD-ALI-SG11
SG11	- C	9999	-	INV-QTY-GIN-LOC-DTM-STS-SG12-SG13-SG14-SG15
SG14	- C	10	-	RFF-DTM
RFF	- M	1	-	Reference

Function:

To specify a reference.

		EDIFACT	GS1	*	Description
C506	REFERENCE	M	**M**		
1153	Reference code qualifier	M an..3	**M**		ALN = Physical inventory recount reference number AWY = Reserve goods identifier CR = Customer reference number CT = Contract number
1154	Reference identifier	C an..70	**R**		
1156	Document line identifier	C an..6	**N**		
4000	Reference version identifier	C an..35	**N**		
1060	Revision identifier	C an..6	**N**		

Segment Notes:

This segment is used to identify any references specific to the current line item. References specified here override those given at heading level for the current line only when the same qualifier is used.

Example:
RFF+CT:651899'

5. Segments Layout

Segment number: 27

SG9	- C	9999999	-	LIN-PIA-IMD-ALI-SG11
SG11	- C	9999	-	INV-QTY-GIN-LOC-DTM-STS-SG12-SG13-SG14-SG15
SG14	- C	10	-	RFF-DTM
DTM	- C	1	-	Date/time/period

Function:

To specify date, and/or time, or period.

		EDIFACT	GS1	*	Description
C507	DATE/TIME/PERIOD	M	**M**		
2005	Date or time or period function code qualifier	M an..3	**M**	*	171 = Reference date/time
2380	Date or time or period value	C an..35	**R**		
2379	Date or time or period format code	C an..3	**R**		102 = CCYYMMDD 718 = CCYYMMDD-CCYYMMDD

Segment Notes:

This segment is used to specify dates and times associated with the previous RFF segment.

Example:
DTM+171:20020925:102'

5. Segments Layout

Segment number: 28

SG9	- C	9999999	-	LIN-PIA-IMD-ALI-SG11
SG11	- C	9999	-	INV-QTY-GIN-LOC-DTM-STS-SG12-SG13-SG14-SG15
SG15	- C	9999	-	CPS-SG16
CPS	- M	1	-	Consignment packing sequence

Function:

To identify the sequence in which physical packing is presented in the consignment, and optionally to identify the hierarchical relationship between packing layers.

		EDIFACT	GS1	*	Description
7164	Hierarchical structure level identifier	M an..35	**M**		Sequential numbering recommended. When not identifying different packaging hierarchical levels within the Inventory Report, it is recommended to use a default value of 1.
7166	Hierarchical structure parent identifier	C an..35	**O**		
7075	Packaging level code	C an..3	**N**		

Segment Notes:

This segment is used to provide a detailed description of the packaging of the goods held in stock.

Example:
CPS+1'

5. Segments Layout

Segment number: 29

SG9	- C	9999999	- LIN-PIA-IMD-ALI-SG11
SG11	- C	9999	- INV-QTY-GIN-LOC-DTM-STS-SG12-SG13-SG14-SG15
SG15	- C	9999	- CPS-SG16
SG16	- C	9999	- PAC-SG17
PAC	- M	1	- Package

Function:

To describe the number and type of packages/physical units.

		EDIFACT	GS1	*	Description
7224	Package quantity	C n..8	**O**		
C531	PACKAGING DETAILS	C	**O**		
7075	Packaging level code	C an..3	**N**		
7233	Packaging related description code	C an..3	**O**		50 = Package barcoded EAN-13 or EAN-8 51 = Package barcoded ITF-14 52 = Package barcoded UCC or EAN-128
7073	Packaging terms and conditions code	C an..3	**O**		1 = Packaging cost paid by supplier 2 = Packaging cost paid by recipient
C202	PACKAGE TYPE	C	**R**		
7065	Package type description code	C an..17	**A**		09 = Returnable pallet (GS1 Temporary Code) 201 = Pallet ISO 1 - 1/1 EURO Pallet (GS1 Temporary Code)
1131	Code list identification code	C an..17	**O**		
3055	Code list responsible agency code	C an..3	**D**	*	9 = GS1 This data element is only used when GS1 code values are used in data element 7065.
7064	Type of packages	C an..35	**O**		
C402	PACKAGE TYPE IDENTIFICATION	C	**N**		
7077	Description format code	M an..3			
7064	Type of packages	M an..35			
7143	Item type identification code	C an..3			
7064	Type of packages	C an..35			
7143	Item type identification code	C an..3			
C532	RETURNABLE PACKAGE DETAILS	C	**D**		This composite is only used where the packaging being described is returnable. This composite identifies who is responsible for the payment of its return.
8395	Returnable package freight payment responsibility code	C an..3	**O**		1 = Paid by customer 3 = Paid by supplier
8393	Returnable package load contents code	C an..3	**N**		

Segment Notes:

This segment is used to identify the type of packaging used for the current line item.

Example:
PAC+4++PK'

5. Segments Layout

Segment number: 30

SG9	- C	9999999	-	LIN-PIA-IMD-ALI-SG11
SG11	- C	9999	-	INV-QTY-GIN-LOC-DTM-STS-SG12-SG13-SG14-SG15
SG15	- C	9999	-	CPS-SG16
SG16	- C	9999	-	PAC-SG17
SG17	- C	9999	-	PCI-DTM-GIN
PCI	- M	1	-	Package identification

Function:

To specify markings and labels on individual packages or physical units.

		EDIFACT	GS1	*	Description
4233	Marking instructions code	C an..3	**R**		17 = Supplier's instructions 18 = Carrier's instructions 39 = Marked with Serial Shipping Container Code (SSCC)
C210	MARKS & LABELS	C	**O**		C210 is only used, if the following segments of the current segmentgroup do not cover the reference.
7102	Shipping marks description	M an..35	**M**		
7102	Shipping marks description	C an..35	**O**		
7102	Shipping marks description	C an..35	**O**		
7102	Shipping marks description	C an..35	**O**		
7102	Shipping marks description	C an..35	**O**		
7102	Shipping marks description	C an..35	**O**		
7102	Shipping marks description	C an..35	**O**		
7102	Shipping marks description	C an..35	**O**		
7102	Shipping marks description	C an..35	**O**		
7102	Shipping marks description	C an..35	**O**		
8275	Container or package contents indicator code	C an..3	**N**		
C827	TYPE OF MARKING	C	**N**		
7511	Marking type code	M an..3			
1131	Code list identification code	C an..17			
3055	Code list responsible agency code	C an..3			

Segment Notes:

This segment is used to specify markings and labels which have been marked on the packaging of the current line item.

Example:
PCI+39'

5. Segments Layout

Segment number: 31

SG9	- C	9999999	-	LIN-PIA-IMD-ALI-SG11
SG11	- C	9999	-	INV-QTY-GIN-LOC-DTM-STS-SG12-SG13-SG14-SG15
SG15	- C	9999	-	CPS-SG16
SG16	- C	9999	-	PAC-SG17
SG17	- C	9999	-	PCI-DTM-GIN
DTM	- C	5	-	Date/time/period

Function:

To specify date, and/or time, or period.

		EDIFACT	GS1	*	Description
C507	DATE/TIME/PERIOD	M	**M**		
2005	Date or time or period function code qualifier	M an..3	**M**		36 = Expiry date 94 = Production/manufacture date 194 = Start date/time 206 = End date/time 360 = Sell by date 361 = Best before date 363 = Total shelf life period 366 = Inventory report date
2380	Date or time or period value	C an..35	**R**		
2379	Date or time or period format code	C an..3	**R**		102 = CCYYMMDD 203 = CCYYMMDDHHMM 718 = CCYYMMDD-CCYYMMDD

Segment Notes:

This segment is used to specify any dates and/or times marked on the package.

Example:
DTM+36:20020101:102'

5. Segments Layout

Segment number: 32

SG9	- C	9999999	-	LIN-PIA-IMD-ALI-SG11
SG11	- C	9999	-	INV-QTY-GIN-LOC-DTM-STS-SG12-SG13-SG14-SG15
SG15	- C	9999	-	CPS-SG16
SG16	- C	9999	-	PAC-SG17
SG17	- C	9999	-	PCI-DTM-GIN
GIN	- C	9999	-	Goods identity number

Function:

To give specific identification numbers, either as single numbers or ranges.

		EDIFACT	GS1	*	Description
7405	Object identification code qualifier	M an..3	**M**	*	AW = Serial shipping container code BJ = Serial shipping container code
C208	IDENTITY NUMBER RANGE	M	**M**		
7402	Object identifier	M an..35	**M**		
7402	Object identifier	C an..35	**O**		
C208	IDENTITY NUMBER RANGE	C	**O**		
7402	Object identifier	M an..35	**M**		
7402	Object identifier	C an..35	**O**		
C208	IDENTITY NUMBER RANGE	C	**O**		
7402	Object identifier	M an..35	**M**		
7402	Object identifier	C an..35	**O**		
C208	IDENTITY NUMBER RANGE	C	**O**		
7402	Object identifier	M an..35	**M**		
7402	Object identifier	C an..35	**O**		
C208	IDENTITY NUMBER RANGE	C	**O**		
7402	Object identifier	M an..35	**M**		
7402	Object identifier	C an..35	**O**		

Segment Notes:

This segment is used to provide identification numbers relevant to one or more shipping containers or packaging units.
In EANCOM it is recommended to use the Serial Shipping Container Code for unique identification of individual transport packages (see page 2).
DE C208: If a sequential series of identity numbers is provided (e.g., from 1 up to and including 10) only one repetition of composite C208 is needed with the first repetition of 7402 specifying the smaller number (e.g., 1) and the second repetition the larger number (e.g., 10). If the identity numbers are not sequential and part of a series (e.g., 1, 3, and 10) then a separate C208 and DE 7402 must be used for each identity number.
Within internal applications users may provide a range of Serial Shipping Container Codes using one repetition of C208 (as described above) by transmitting a 17 digit SSCC and calculating the check digit within the application.

Example:
GIN+AW+354123450000000106+354123450000000416'
This example identifies two serial shipping container codes 354123450000000106 and 354123450000000416.

5. Segments Layout

Segment number: 33

UNT	- M	1 - Message trailer			
Function: To end and check the completeness of a message. Notes: 1. 0062, the value shall be identical to the value in 0062 in the corresponding UNH segment.					
		EDIFACT	GS1	*	Description
0074	Number of segments in a message	M n..10	**M**		The total number of segments in the message is detailed here.
0062	Message reference number	M an..14	**M**		The message reference numbered detailed here should equal the one specified in the UNH segment.
Segment Notes: The UNT segment is a mandatory UN/EDIFACT segment. It must always be the last segment in the message. Example: UNT+36+ME000001'					

5. Segments Layout

Segment number: 34

UNZ - M 1 - Interchange trailer					
Function: To end and check the completeness of an interchange. Notes: 1. 0020, the value shall be identical to the value in 0020 in the corresponding UNB segment.					
		EDIFACT	GS1	*	Description
0036	Interchange control count	M n..6	**M**		Number of messages or functional groups within an interchange.
0020	Interchange control reference	M an..14	**M**		Identical to DE 0020 in UNB segment.
Segment Notes: This segment is used to provide the trailer of an interchange. DE 0036: If functional groups are used, this is the number of functional groups within the interchange. If functional groups are not used, this is the number of messages within the interchange. UNZ+5+12345555'					

Example 1 -
Simple Inventory Report message (one stock reporting location)

The following is an example of a simple Inventory Report message sent 1st March 2002 with reference number IVR21599. The message is sent from a stock location identified by GLN 5412345000013 to a head office identified by GLN 5410738100005.

The distribution centre informs the head office of stock levels as of 20th February 2002 for three different products. The stocks for two of the product stock quantities are sub-divided by best before date. The data in the following table is transmitted, except stock value.

GTIN	Actual Stock	Best Before Date	Gross Unit Price	Stock Value
5412345100102	55	2002/04/25	890	213,600
	185	2002/04/29		
5412345100560	12	2002/04/14	1450	162,400
	100	2002/04/19		
5412345100782	325	-	540	175,500

UNH+ME000001+INVRPT:D:01B:UN:EAN006’	Message header
BGM+35+IVR21599+9’	Inventory report number IVR21599
DTM+137:20020301:102’	Message date 1st March 2002
DTM+366:20020420:102’	Inventory report date 20th April 2002
NAD+GY+5412345000013::9’	Inventory reporting party identified by GLN 5412345000013
RFF+VA:685311’	VAT registration number
NAD+CO+5410738100005::9’	Corporate office identified with by GLN 5410738100005
RFF+VA:544211’	VAT registration number
LIN+1++5412345100102:SRV’	Line item number 1 product identified with GTIN 5412345100102
INV++++1	Book-keeping inventory balance
QTY+145:55’	Actual stock quantity 55
DTM+361:20020425:102’	Best before date 25th April 2002
PRI+AAB:890:CA:RTP’	Gross retail price 890 excluding allowances/charges
INV++++1	Book-keeping inventory balance
QTY+145:185’	Actual stock 185
DTM+361:20020429:102’	Best before date 29th April 2002
PRI+AAB:890:CA:RTP’	Gross retail price 890 excluding allowances/charges

LIN+2++5412345100560:SRV’	Line item number 2 product identified with GTIN 5412345100560
INV++++1	Book-keeping inventory balance
QTY+145:12’	Actual stock quantity 12
DTM+361:20020414:102’	Best before date 14th April 2002
PRI+AAB:1450:CA:RTP’	Gross retail price 1450 excluding allowances/charges
INV++++1	Book-keeping inventory balance
QTY+145:100’	Actual stock quantity 100
DTM+361:20020419:102’	Best before date 19th April 2002
PRI+AAB:1450:CA:RTP’	Gross retail price of 1450 excluding allowances/charges
LIN+3++5412345100782:SRV’	Line item number 3 product identified with GTIN 5412345100782
INV++++1	Book-keeping inventory balance
QTY+145:325’	Actual stock quantity 325
PRI+AAB:540:CA:RTP’	Gross retail price 540 excluding allowances/charges
UNT+31+ME000001’	Total number of segments in the message equals 31

Example 2 –
Extended Inventory Report message (multiple locations)

The following is an example of an extended Inventory Report message sent 1st April 2002 with reference number INV0001. The message is sent from a buyer identified by GLN 5410738100005 to a manufacturer identified by GLN 5412345000013.

The buyer informs the manufacturer of inventory levels in three of his distribution centres for the product identified by GTIN 5412345123453, when the inventory count was taken. The three distribution centres are identified by GLNs and have the following actual stock counts:

5410738100012 – 42 Actual stock

5410738100029 – 153 Actual stock

5410738100036 – 98 Actual stock

UNH+ME000001+INVRPT:D:01B:UN:EAN006’	Message header
BGM+35+INV0001+9’	Inventory report number INV0001
DTM+137:20020401:102’	Message date 1st April 2002
NAD+BY+5410738100005::9’	Buyer identified by GLN 5410738100005
RFF+VA:544211’	Buyer VAT registration number
NAD+MF+5412345000013::9’	Manufacturer identified by GLN 5412345000013
RFF+VA:685311’	Manufacturer VAT registration number

LIN+1++5412345123453:SRV’	Line item number 1 product identified with GTIN 5412345123453
INV++++1	Book-keeping inventory balance
QTY+145:42’	Actual stock 42
LOC+18+5410738100012::9’	Location of the goods, warehouse identified by GLN 5410738100012
INV++++1	Book-keeping inventory balance
QTY+145:153’	Actual stock 153
LOC+18+5410738100029::9’	Location of the goods, warehouse identified by GLN 5410738100029
INV++++1	Book-keeping inventory balance
QTY+145:98’	Actual stock 98
LOC+18+5410738100036::9’	Location of the goods, warehouse identified by GLN 5410738100036
UNT+18+ME000001’	Total number of segments in the message equals 18

Example 3 –
Simple Inventory Report message (one stock reporting location) reporting stock levels on products and identification numbers of shipping containers

The following is an example of a simple Inventory Report message sent 1st February 2002 with reference number INVR21599. The message is sent from a distribution centre identified by GLN 5410738100050 to a head office identified by GLN 5410738100005.

The distribution centre informs the head office of the total stock levels for the products identified with the GTIN 5412345100102. The total stock for the product is divided into sub-quantities by shipping containers ready for despatch. Each shipping container is identified by an EAN.UCC Serial Shipping Container Code and information is given on the minimum durability date (best before date) for each shipping container. The data in the following table is transmitted.

GTIN	Total Stock	Sub-quantity	Serial Shipping Container Codes	Best Before Date
5412345100102	300	150	354123450000001011, 354123450000001028, 354123450000001035	2002/02/17
		100	354123450000004227 and 354123450000004296	2002/04/07
		50	354123450000006430	2002/05/24

UNH+ME000001+INVRPT:D:01B:UN:EAN006’	Message header
BGM+35+INVR21599+9’	Inventory report number INVR21599

6. Examples

DTM+137 :20020201 :102’	Message date
NAD+GY+5410738100050::9’	Inventory reporting party identified by GLN 5410738100050
RFF+VA:685311’	Inventory reporting party VAT registration number 685311
NAD+CO+5410738100005::9’	Corporate office identified by GLN 5410738100005
RFF+VA:544211’	Corporate office VAT registration number 544211
LIN+1++5412345100102:SRV’	Line item number 1 product identified with GTIN 5412345100102
INV++++1	Book-keeping inventory balance
QTY+145:150’	Actual stock 150
CPS+1’	Packing sequence number 1
PAC+3++201::9’	3 packages in an ISO pallet number 1
PCI+33E’	Packages marked with EAN.UCC SSCC
DTM+361:20020217:102’	Best before date 17th February 2002
GIN+BJ+354123450000001011+354123450000001028+354123450000001035’	EAN.UCC SSCC’s 354123450000001011, 354123450000001028 and 354123450000001035
INV++++1	Book-keeping inventory balance
QTY+145:100’	Actual stock quantity 100
CPS+2’	Packing sequence number 2
PAC+2++201::9’	2 packages in an ISO pallet number 1
PCI+33E’	Marked with SSCC
DTM+361:20020407:102’	Best before date 7th April 2002
GIN+BJ+354123450000004227+354123450000004296’	EAN.UCC SSCC’s 354123450000004227 and 354123450000004296
INV++++1	Book-keeping inventory balance
QTY+145:50’	Actual stock quantity 50
CPS+3’	Packing sequence number 3
PAC+1++201::9’	1 packages in an ISO pallet number 1
PCI+33E’	Marked with SSCC
DTM+361:20020524:102'	Best before date 24th May 2002
GIN+BJ+354123450000006430'	EAN.UCC SSCC number 354123450000006430
UNT+30+ME000001'	Total number of segments in the message equals 30

Note:
The EDI interchange will include the UNB...UNZ segments and, if applicable, the UNG...UNE segments (see Part I,

section 5.7)